MIAMI-DADE

MIAMI-DADE COUNTY, FLORIDA
METRO-DADE FLAGLER BUILDING

BUILDING CODE COMPLIANCE OFFICE
METRO-DADE FLAGLER BUILDING
140 WEST FLAGLER STREET, SUITE 1603
MIAMI, FLORIDA 33130-1563
(305) 375-2901 FAX (305) 375-2908

CONTRACTOR LICENSING SECTION
(305) 375-2527 FAX (305) 375-2558

CONTRACTOR ENFORCEMENT DIVISION
(305) 375-2966 FAX (305) 375-2908

PRODUCT CONTROL DIVISION
(305) 375-2902 FAX (305) 372-6339

PRODUCT CONTROL NOTICE OF ACCEPTANCE

Homeshield Industries, Inc.
3585 East 10 Court
Hialeah ,FL 33013

Your application for Notice of Acceptance (NOA) of:
Extruded Aluminum Roll-Up Shutter
under Chapter 8 of the Code of Miami-Dade County governing the use of Alternate Materials and Types of Construction, and completely described herein, has been recommended for acceptance by the Miami-Dade County Building Code Compliance Office (BCCO) under the conditions specified herein.

This NOA shall not be valid after the expiration date stated below. BCCO reserves the right to secure this product or material at any time from a jobsite or manufacturer's plant for quality control testing. If this product or material fails to perform in the approved manner, BCCO may revoke, modify, or suspend the use of such product or material immediately. BCCO reserves the right to revoke this approval, if it is determined by BCCO that this product or material fails to meet the requirements of the South Florida Building Code.

The expense of such testing will be incurred by the manufacturer.

ACCEPTANCE NO.: 00-1207.02
EXPIRES: 04/30/2006

Raul Rodriguez
Chief Product Control Division

THIS IS THE COVERSHEET, SEE ADDITIONAL PAGES FOR SPECIFIC AND GENERAL CONDITIONS
BUILDING CODE & PRODUCT REVIEW COMMITTEE

This application for Product Approval has been reviewed by the BCCO and approved by the Building Code and Product Review Committee to be used in Miami-Dade County, Florida under the conditions set forth above.

Francisco J. Quintana, R.A.
Director
Miami-Dade County
Building Code Compliance Office

APPROVED: 03/01/2001

Homeshield Industries, Inc.

ACCEPTANCE NO: 00-1207.02

APPROVED: MAR 0 1 2001

EXPIRES: 04/30/2006

NOTICE OF ACCEPTANCE: SPECIFIC CONDITIONS

1 SCOPE:

1.1 This renews the Notice of Acceptance No. 97-1202.03 that was issued on 04/30/98. It approves an extruded aluminum roll-up type shutter, as described in Section 2 of this Notice of Acceptance, designed to comply with the South Florida Building Code, (S.F.B.C.) 1994 Edition for Miami-Dade County. For the locations where the pressure requirements, as determined by S.F.B.C. Chapter 23, do not exceed the design pressure rating values indicated in the approved drawings.

2 PRODUCT DESCRIPTION:

2.1 The **63mm Extruded Aluminum Roll-Up Shutter** and its components shall be constructed in strict compliance with the following documents: Drawing No. **97-245**, Sheets 1 through 14 of 14, titled "63 mm Extruded Roll-Up Shutter", prepared by Tilteco, Inc., dated 09/22/97, with no revisions. It is signed and sealed by Walter A. Tillit Jr. PE. bearing the Miami-Dade County Product Control approval stamp with the Notice of Acceptance number and approval date. These documents shall herein after be referred to as the approved drawings.

3 LIMITATIONS:

3.1 All permanent set components, included but not limited to embedded anchor bolts, metal shields, headers and sills, must be protected against corrosion, damage and contamination at all times.

3.2 Minimum separation from interior storm bar to existing glass to protect shall be 2".

3.3 Minimum slat engagement inside of sidetrack shall be 1-1/2".

3.4 Slat orientation shall be concave side to the exterior.

4 INSTALLATION:

4.1 The extruded aluminum roll-up shutter and its component shall be installed in strict compliance with the approved drawing

5 LABELING:

5.1 Each unit shall bear a permanent label with the manufacturer's name or logo, city, state and the following statement: "Miami-Dade County Product Control Approved"

6 BUILDING PERMIT REQUIREMENTS:

6.1 Application for Building Permit shall be accompanied by copies of the following:

6.1.1 This Notice of Acceptance

6.1.2 Duplicate copies of the approved drawings, as identified in Section 2 of this Notice of Acceptance, clearly marked to show the components selected for the proposed installation.

6.1.3 Any other document required by the Building Official or the South Florida Building Code in order to evaluate the installation of this system.

Manuel Perez

Manuel Perez, PE., Product Control Examiner
Product Control Division

Homeshield Industries, Inc.

ACCEPTANCE NO: 00-1207.02

APPROVED: MAR 0 1 2001

EXPIRES: 04/30/2006

NOTICE OF ACCEPTANCE: STANDARD CONDITIONS

1 Renewal of this Acceptance (approval) shall be considered after a renewal application has been filed and the original submitted documents, including test-supporting data, engineering documents, are no older than eight (8) years.

2. Any and all approved products shall be permanently labeled with the manufacturer's name, city, state, and the following statement: "Miami-Dade County Product Control Approval", or as specifically stated in the specific conditions of this Acceptance.

3. Renewals of Acceptance will not be considered if:
   a. There has been a change in the South Florida Building Code affecting the evaluation of this product and the product is not in compliance with the code changes.
   b. The product is no longer the same product (identical) as the one originally approved.
   c. If the Acceptance holder has not complied with all the requirements of this acceptance, including the correct installation of the product.
   d. The engineer who originally prepared, signed and sealed the required documentation initially submitted, is no longer practicing the engineering profession.

4. Any revision or change in the materials, use, and/or manufacture of the product or process shall automatically be cause for termination of this Acceptance, unless prior written approval has been requested (through the filing of a revision application with appropriate fee) and granted by this office.

5. Any of the following shall also be grounds for removal of this Acceptance:
   a. Unsatisfactory performance of this product or process.
   b. Misuse of this Acceptance as an endorsement of any product, for sales, advertising or any other purposes.

6. The Notice of Acceptance number preceded by the words Miami-Dade County, Florida, and followed by the expiration date may be displayed in advertising literature. If any portion of the Notice of Acceptance is displayed, then it shall be done in its entirety.

7. A copy of this Acceptance as well as approved drawings and other documents, where it applies, shall be provided to the user by the manufacturer or its distributors and shall be available for inspection at the job site at all time. The engineer need not reseal the copies.

8. Failure to comply with any section of this Acceptance shall be cause for termination and removal of Acceptance.

9. This Notice of Acceptance consists of pages 1, 2 and this last page 3.

Manuel Perez

Manuel Perez, PE., Product Control Examiner
Product Control Division

END OF THIS ACCEPTANCE

Homeshield Industries, Inc.

ACCEPTANCE NO: 00-1207.02

APPROVED: MAR 0 1 2001

EXPIRES: 04/30/2006

NOTICE OF ACCEPTANCE: EVIDENCE SUBMITTED:

A. DRAWING

1. Drawing No. 97-245, "63 mm Extruded Roll-Up Shutters", Sheets 1 through 14 of 14, prepared by Tilteco, Inc., dated 09/22/97, with no revisions, signed and sealed by Walter A. Tillit Jr., PE.

B. TEST

1. Test report on Uniform Static Air Pressure Test per PA 202 of extruded aluminum roll-up shutters, prepared by Hurricane Engineering & Testing, Inc., Report No. HETI 97-664, dated 09/17/97, signed and sealed by A. Viquar, PE.
2. Test report on Large Missile Impact Test per PA 201, Cyclic Wind Pressure Test per PA 203 and Uniform Static Air Pressure Test per PA 202, of extruded aluminum roll-up shutter, prepared by Hurricane Engineering & Testing, Inc., Report No.HETI 97-656 & 658, dated 08/26/97 & 08/28/97, signed and sealed by H. M. Medina, PE.
3. Test report on Large Missile Impact Test per PA 201of extruded aluminum roll-up shutter, prepared by Hurricane Engineering & Testing, Inc., Report No. HETI 97-627(Revised) & 681, from 05/09/97 to 07/17/97, signed and sealed by H. M. Medina, PE.
4. Test report on Large Missile Impact Test per PA 201 and Cyclic Wind Pressure Test per PA 203 of extruded aluminum roll-up shutter, prepared by Hurricane Engineering & Testing, Inc., Report No. 97-667, 668, 676 & 679, dated from 09/26/97 to 10/20/97, signed and sealed by H. M.Medina, PE.

C. CALCULATIONS

1. Comparative analysis for slats; storm bars, headers and anchors using rational analysis dated 02/09/98, pages 1 through 79 of 79, prepared by Tilteco Inc., signed and sealed by W. A. Tillit Jr., PE.

D. MATERIAL CERTIFICATION

1. Die Drawings prepared by Werner Co. drawing No. 79746, 47, & 48, dated 05/17/97 & 09/09/96 and signed by B. Stamper
2. Die drawing prepared by Werner Co. drawing No. 79730 & 31, dated 05/17/97 to 10/11/96 and signed by B. Stamper.
3. Tensile Test Report No HETI 97-T57, per ASTM E8, prepared by Hurricane Engineering & Testing, Inc. dated 10/21/97, signed and sealed by H. M. Medina, PE.

E. STATEMENTS

1. Letter of No Change issued by Homeshield Industries, Inc., on 11/13/200, signed and sealed by J. D. Nickel.

Manuel Perez

Manuel Perez, PE, Product Control Examiner
Product Control Division

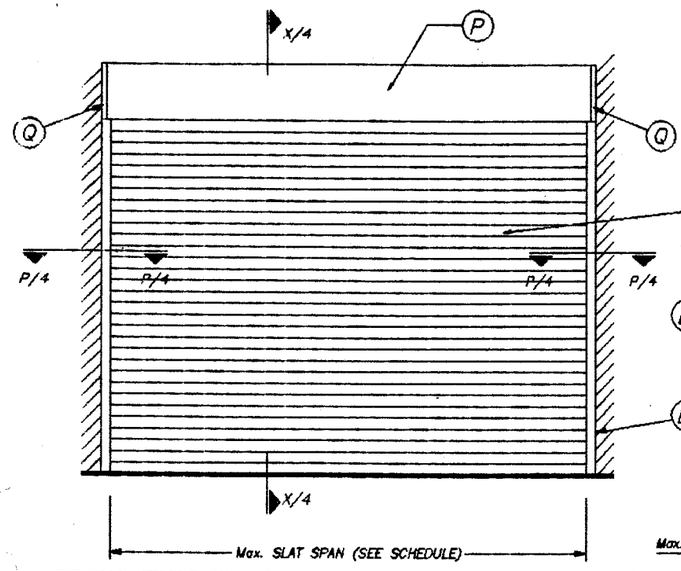

TYPICAL SINGLE UNIT ELEVATION (NO STORM BARS REQUIRED)

NOTE: SEE SHEET 2 & 3 OF 14 FOR COMPONENTS NOMENCLATURE.

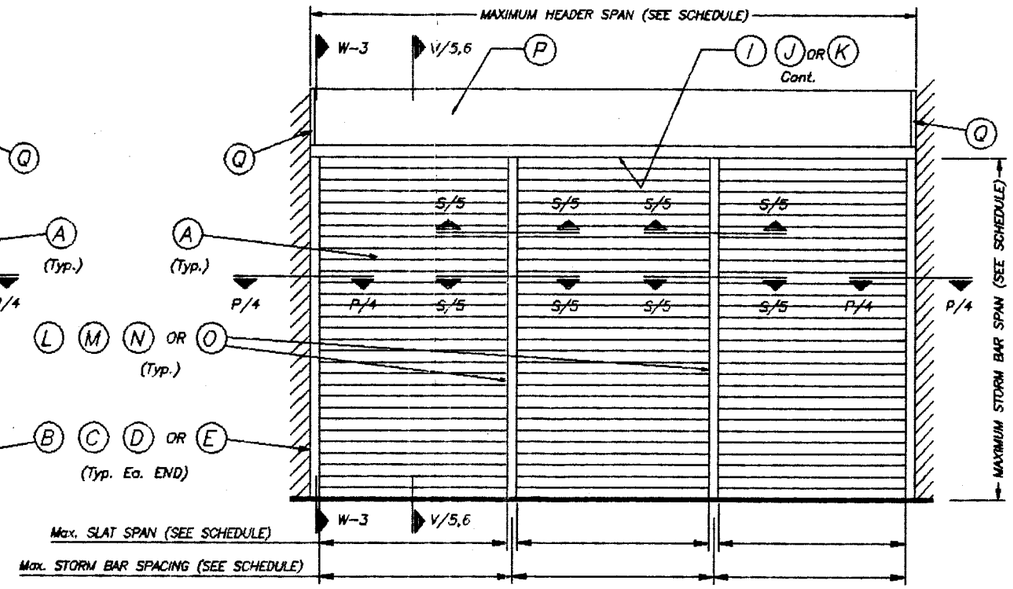

TYPICAL MULTIPLE UNIT ELEVATION (STORM BARS REQUIRED)

NOTE: SEE SHEET 2 & 3 OF 14 FOR COMPONENTS NOMENCLATURE.

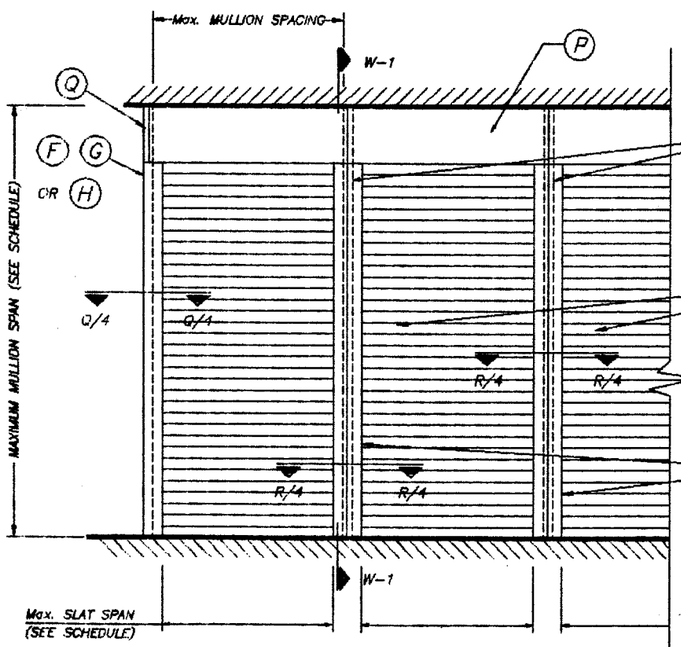

TYPICAL CONSECUTIVE SINGLE UNIT ELEVATION (NO STORM BARS REQUIRED)

NOTE: SEE SHEET 2 & 3 OF 14 FOR COMPONENTS NOMENCLATURE.

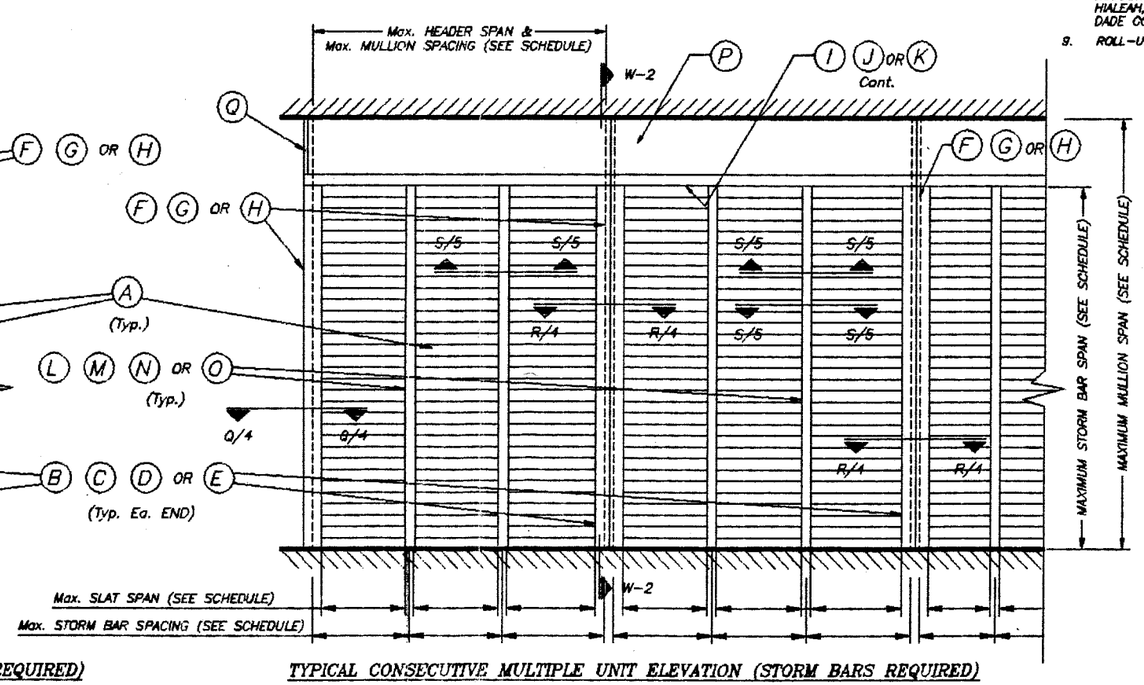

TYPICAL CONSECUTIVE MULTIPLE UNIT ELEVATION (STORM BARS REQUIRED)

NOTE: SEE SHEET 2 & 3 OF 14 FOR COMPONENTS NOMENCLATURE.

GENERAL NOTES:

1. ROLL-UP SHUTTER HAS BEEN DESIGNED IN ACCORDANCE WITH THE DADE COUNTY, 1994 EDITION OF THE SOUTH FLORIDA BUILDING CODE.
   DESIGN WIND LOADS SHALL BE DETERMINED AS PER SECTION 6 OF ASCE 7-88, WITH 110 m.p.h. BASIC WIND SPEED.
   ROLL-UP SHUTTER'S ADEQUACY FOR IMPACT AND FATIGUE RESISTANCE HAS BEEN VERIFIED IN ACCORDANCE WITH SECTIONS 2315 & 2314 RESPECTIVELY OF THE ABOVE MENTIONED CODE.
2. ALL ALUMINUM EXTRUSIONS SHALL BE 6063-T6 ALLOY (UNLESS OTHERWISE NOTED).
3. ALL SCREWS TO BE STAINLESS STEEL 304 OR 316 SERIES W/50 ksi YIELD POINT AND 90 ksi TENSILE STRENGTH.
4. BOLTS TO BE 2024-T4 ALUMINUM ALLOY, GALVANIZED OR STAINLESS STEEL WITH 36 ksi MINIMUM YIELD POINT.
5. STORM BARS SHALL REMAIN IN PLACE AT ALL TIMES.
6. ANCHORS TO WALL SHALL BE AS FOLLOWS: (UNLESS OTHERWISE NOTED)
   (A) TO EXISTING POURED CONCRETE:
   - 1/4" ø TAPCON ANCHORS OR MAXI-SET TAPCON ANCHORS, AS MANUFACTURED BY I.T.W./RAWSET OR ELCO INDUSTRIES, INC.

   NOTES:
   A.1) MINIMUM EMBEDMENT OF CONCRETE ANCHORS INTO THE CONCRETE UNIT SHALL BE 1 3/4". NO EMBEDMENT INTO STUCCO SHALL BE CONSIDERED AS PART OF THE REQUIRED EMBEDMENT.
   A.2) IN CASE THAT PRECAST STONE, PRECAST CONCRETE PANELS, OR PAVERS BE FOUND ON THE EXISTING WALL OR FLOOR, ANCHORS SHALL BE LONG ENOUGH TO REACH THE MAIN STRUCTURE BEHIND SUCH PANELS. MINIMUN PENETRATION SHALL BE 1 3/4".

   (B) TO EXISTING CONCRETE BLOCK WALL:
   - 1/4" ø TAPCON ANCHORS OR MAXI-SET TAPCON ANCHORS, AS MANUFACTURED BY I.T.W./RAWSET OR ELCO INDUSTRIES, INC.

   NOTES:
   B.1) MINIMUM EMBEDMENT OF TAPCON ANCHORS OR MAXI-SET TAPCON ANCHORS, INTO THE CONCRETE BLOCK UNIT SHALL BE 1 1/4".
   B.2) IN CASE THAT PRECAST STONE OR PRECAST CONCRETE PANELS BE FOUND ON THE EXISTING WALL, ANCHORS SHALL BE LONG ENOUGH TO REACH THE MAIN STRUCTURE BEHIND SUCH PANELS. ANCHORAGE SHALL BE 1 1/4" MINIMUM.

   (C) ANCHORS SHALL BE INSTALLED FOLLOWING ALL OF THE RECOMENDATIONS AND SPECIFICATIONS OF THE ANCHOR'S MANUFACTURER.
7. IT SHALL BE THE RESPONSIBILITY OF THE CONTRACTOR TO VERIFY THE SOUNDNESS OF THE STRUCTURE WHERE SHUTTER IS TO BE ATTACHED TO INSURE PROPER ANCHORAGE.
8. SHUTTER MANUFACTURER'S STAMP SHALL BE PLACED ON THE EXPOSED SURFACE OF THE SIDE RAIL APROXIMATELY 4" ABOVE THE BOTTOM OF SUCH RAIL.
   STAMP SHALL READ AS FOLLOWS:
   ROLL-UP SHUTTER
   HOMESHIELD INDUSTRIES, INC.
   HIALEAH, FLORIDA
   DADE COUNTY PRODUCT CONTROL APPROVED.
9. ROLL-UP MECHANISM NOT PART OF THIS APPROVAL.

#97-1202.03

PRODUCT RENEWED
ACCEPTANCE No. 00-1207.02
EXPIRATION DATE 04/30/2006
By Manuel Perez
PRODUCT CONTROL DIVISION
BUILDING CODE COMPLIANCE OFFICE

APPROVED AS COMPLYING WITH THE
SOUTH FLORIDA BUILDING CODE
DATE APRIL 30 1998
BY Manuel Perez
PRODUCT CONTROL DIVISION
BUILDING CODE COMPLIANCE OFFICE
ACCEPTANCE NO. 97-1202.03

DADE COUNTY

Walter A. Tillit
2/9/98

TILTECO INC.
TILLIT TESTING & ENGINEERING COMPANY
6585 N.W. 36th. St., Ste. 217, VIRGINIA GARDENS, Fl. 33166
Phone : (305)871-1530 . Fax : (305)871-1531
WALTER A. TILLIT Jr., P. E.
FLORIDA Lic. # 44167

63 mm EXTRUDED ROLL-UP SHUTTER

HOMESHIELD INDUSTRIES, INC.
3585 E. 10th. COURT
HIALEAH, FLORIDA 33013

REV. No	DESCRIPTION	DATE	REV. No	DESCRIPTION	DATE
1	-	-	3		
2	-	-	4		

N. T. S.
SCALE
9/22/97
DATE
97 - 245
DRAWING No
SHEET 1 OF 14

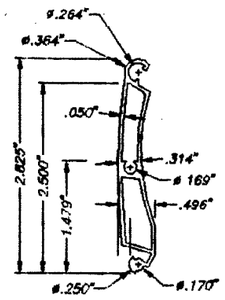

(A) TYPE 1 SLAT

EXTRUDED ALUMINUM SLAT
6063-T6 Alum. ALLOY
SCALE: 1/2" = 1"

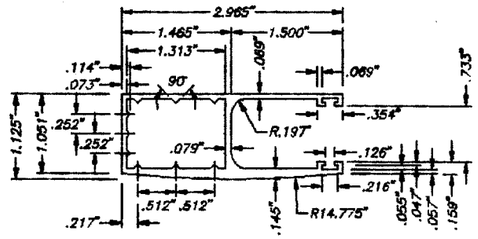

(B) TYPE 1 SIDE RAILS:

6063-T6 Alum. ALLOY
SCALE: 1/2" = 1"

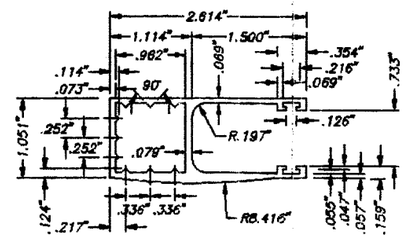

(C) TYPE 2 SIDE RAILS:

6063-T6 Alum. ALLOY
SCALE: 1/2" = 1"

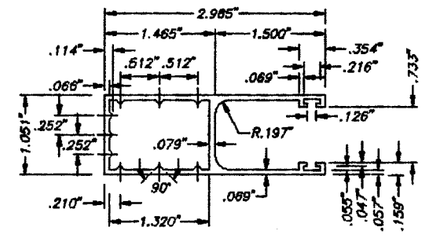

(D) TYPE 3 SIDE RAILS:

6063-T6 Alum. ALLOY
SCALE: 1/2" = 1"

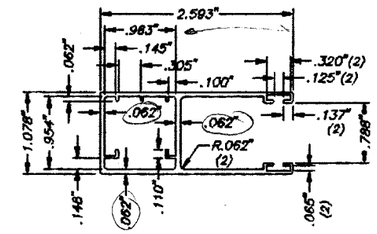

(E) TYPE 4 SIDE RAILS:

6063-T6 Alum. ALLOY
SCALE: 1/2" = 1"

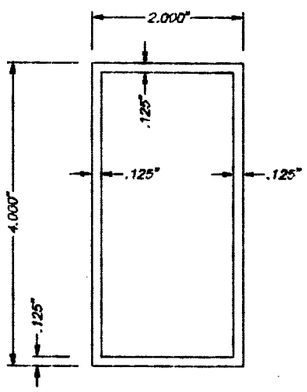

(F) TYPE 1 MULLION:

4" EXTRUDED ALUMINUM
6063-T6 ALUMINUM ALLOY
SCALE: 1/2" = 1"

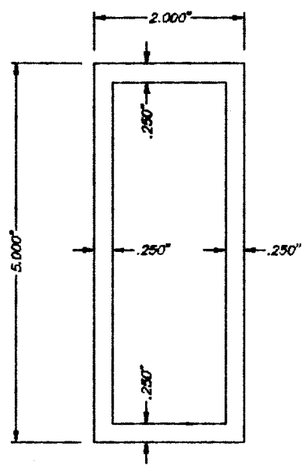

(G) TYPE 2 MULLION:

5" EXTRUDED ALUMINUM
6063-T6 ALUMINUM ALLOY
SCALE: 1/2" = 1"

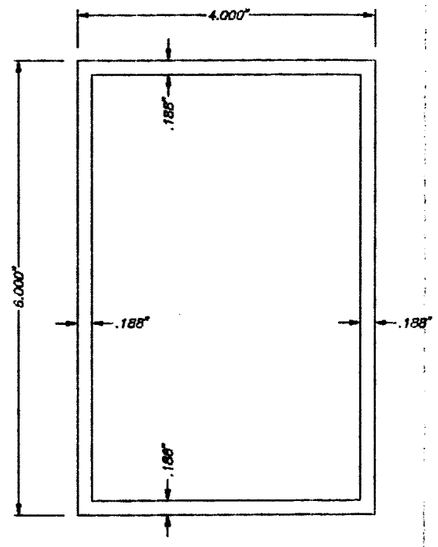

(H) TYPE 3 MULLION:

6" EXTRUDED ALUMINUM
6063-T6 ALUMINUM ALLOY
SCALE: 1/2" = 1"

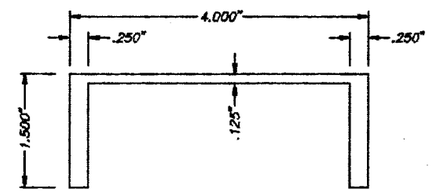

(I) TYPE 1 HEADER:

6063-T6 ALUMINUM ALLOY
SCALE: 1/2" = 1"

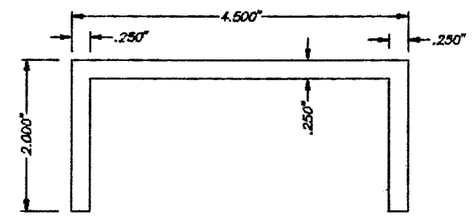

(J) TYPE 2 HEADER:

6063-T6 ALUMINUM ALLOY
SCALE: 1/2" = 1"

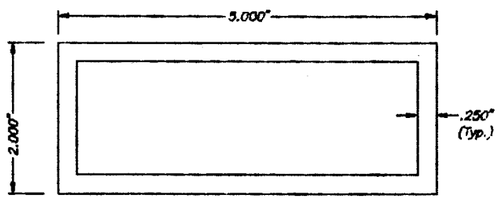

(K) TYPE 3 HEADER:

6063-T6 ALUMINUM ALLOY
SCALE: 1/2" = 1"

PRODUCT RENEWED
ACCEPTANCE No. 00-1207.02
EXPIRATION DATE 04/30/2006
By Manuel Perez
PRODUCT CONTROL DIVISION
BUILDING CODE COMPLIANCE OFFICE

APPROVED AS COMPLYING WITH THE SOUTH FLORIDA BUILDING CODE
DATE APRIL 30 1998
BY Manuel Perez
PRODUCT CONTROL DIVISION
BUILDING CODE COMPLIANCE OFFICE
ACCEPTANCE NO. 97-1202.03

DADE COUNTY

Walter A. Tillit
7/9/98

TILTECO INC.
TILLIT TESTING & ENGINEERING COMPANY
6585 N.W. 36th. St., Ste. 217 – VIRGINIA GARDENS, FL 33166
Phone : (305)871-1530 . Fax : (305)871-1531
WALTER A. TILLIT Jr., P. E.
FLORIDA Lic. # 44167

63 mm EXTRUDED ROLL-UP SHUTTER

HOMESHIELD INDUSTRIES, INC.
3585 E. 10th. COURT
HIALEAH, FLORIDA 33013

REV. No	DESCRIPTION	DATE	REV. No	DESCRIPTION	DATE
1	–	–	3		
2			4		

AS SHOWN SCALE
9/22/97 DATE
97 – 245 DRAWING No
SHEET 2 OF 14

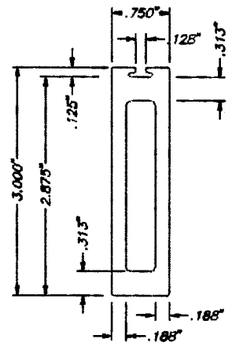

(L) TYPE 1 STORM BAR

EXTRUDED STORM BAR
6063-T6 ALUMINUM ALLOY
SCALE: 1/2" = 1"

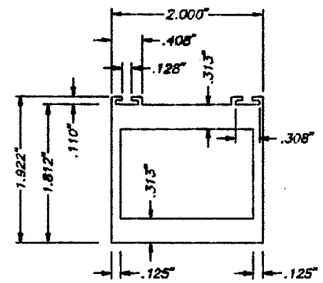

(M) TYPE 2 STORM BAR

EXTRUDED STORM BAR
6063-T6 ALUMINUM ALLOY
SCALE: 1/2" = 1"

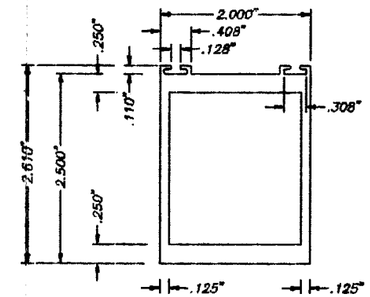

(N) TYPE 3 STORM BAR

2" x 2 1/2" EXTRUDED STORM BAR
6063-T6 ALUMINUM ALLOY
SCALE: 1/2" = 1"

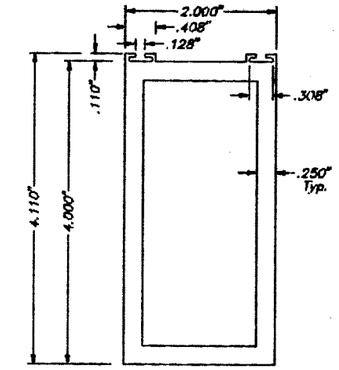

(O) TYPE 4 STORM BAR

2" x 4" EXTRUDED STORM BAR
6063-T6 ALUMINUM ALLOY
SCALE: 1/2" = 1"

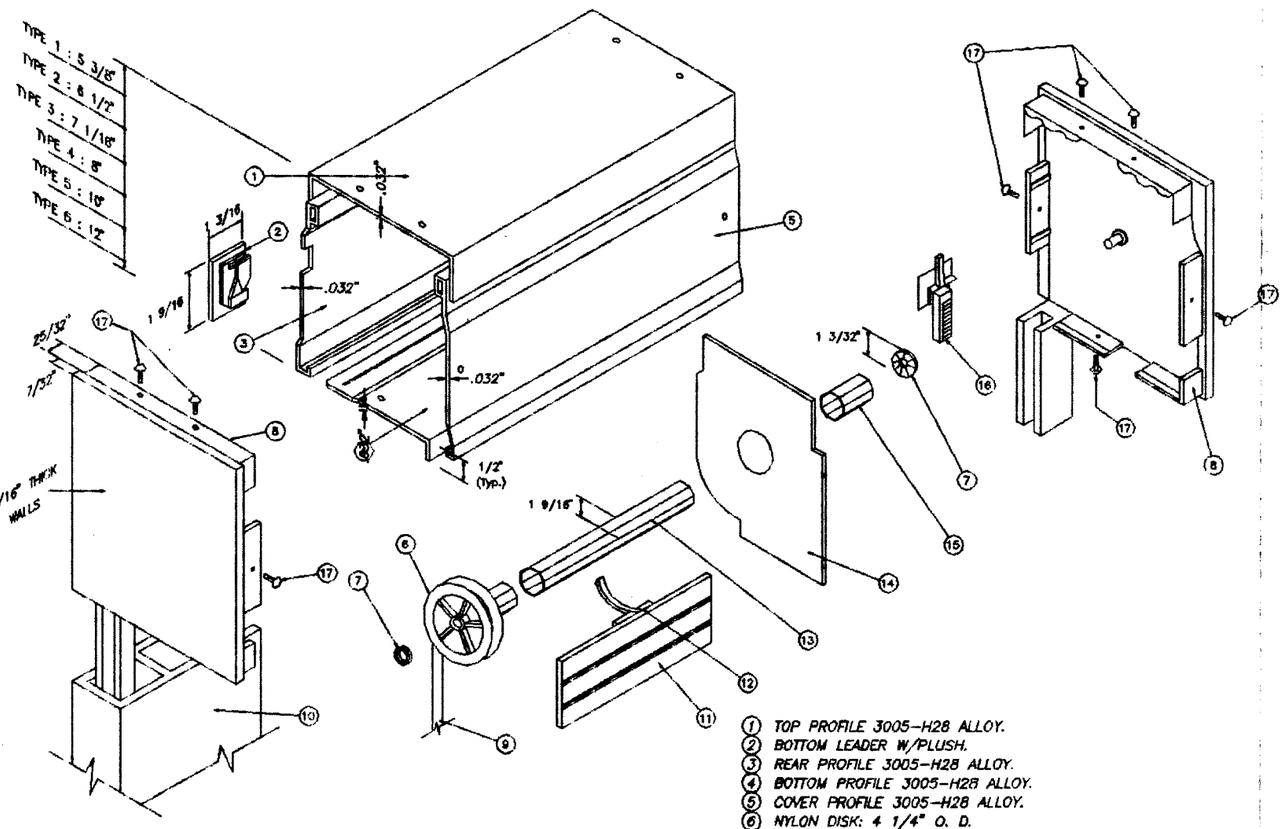

(P) BOX COMPONENTS AND ASSEMBLY DETAIL

1. TOP PROFILE 3005-H28 ALLOY.
2. BOTTOM LEADER W/PLUSH.
3. REAR PROFILE 3005-H28 ALLOY.
4. BOTTOM PROFILE 3005-H28 ALLOY.
5. COVER PROFILE 3005-H28 ALLOY.
6. NYLON DISK: 4 1/4" O. D.
7. ROLLING CUSHION W/BALLS.
8. END CAP: CAST ALUMINUM.
9. RIBBON: 17/32" WIDE.
10. SIDE RAIL.
11. SLAT.
12. EXTRUDED ALUMINUM DRAWING HOOP.
13. GALVANIZED STEEL DRUM: 1 9/16" O. D. x 0.032" Thk.
14. RETAINING METAL PLATE: 26 Ga. Galv. Stl. AT EACH END.
15. NYLON FERRULE: 1 17/32" O. D. x 0.045" Thk. x 3 5/16" Long.
16. NYLON FUNNEL.
17. SCREWS: # 4 x 1/2" S. S.

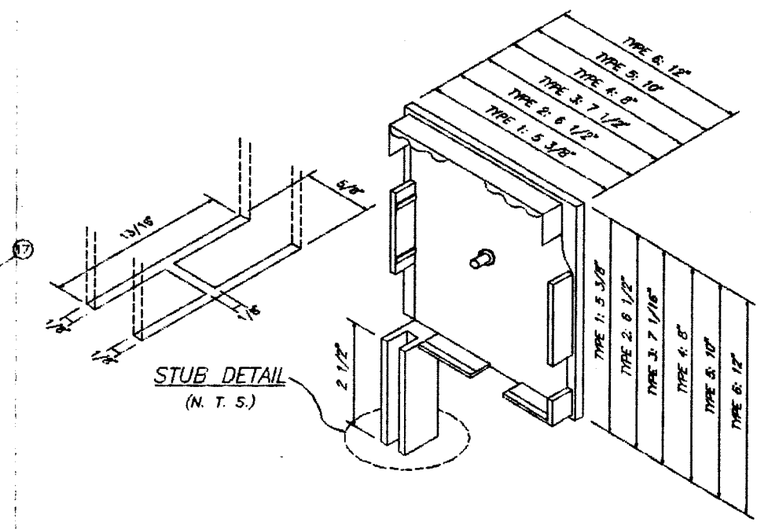

(Q) END CAP

PRODUCT RENEWED
ACCEPTANCE No. 00-1207.02
EXPIRATION DATE 04/30/2006
By Manuel Perez
PRODUCT CONTROL DIVISION
BUILDING CODE COMPLIANCE OFFICE

APPROVED AS COMPLYING WITH THE SOUTH FLORIDA BUILDING CODE
DATE APRIL 30 1998
BY Manuel Perez
PRODUCT CONTROL DIVISION
BUILDING CODE COMPLIANCE OFFICE
ACCEPTANCE NO. 97-1202.03

DADE COUNTY

1/9/98

TILTECO INC.
TILLIT TESTING & ENGINEERING COMPANY
6595 N.W. 36th St., Ste. 217 - VIRGINIA GARDENS, Fl. 33166
Phone : (305)871-1530 . Fax : (305)871-1531
WALTER A. TILLIT Jr., P. E.
FLORIDA Lic. # 44167

63 mm EXTRUDED ROLL-UP SHUTTER

HOMESHIELD INDUSTRIES, INC.
3585 E. 10th. COURT
HIALEAH, FLORIDA 33013

REV. No	DESCRIPTION	DATE	REV. No	DESCRIPTION	DATE
1	-	-	3		
2			4		

AS SHOWN SCALE
9/22/97 DATE
97 - 245 DRAWING No
SHEET 3 OF 14

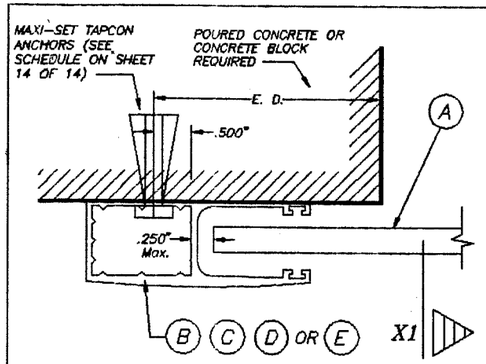

SECTION P – P (1) : WALL MOUNT

SCALE: 1/2" = 1"

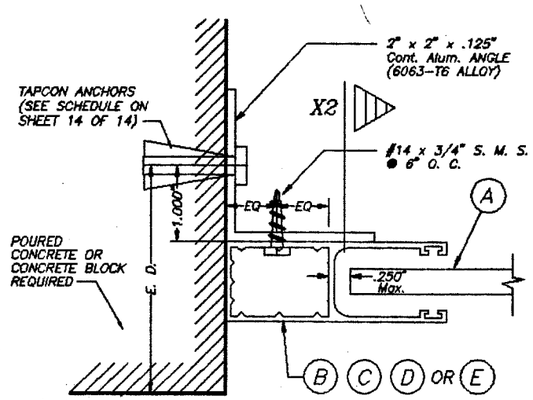

SECTION P – P (2) : SIDE WALL MOUNT

SCALE: 1/2" = 1"

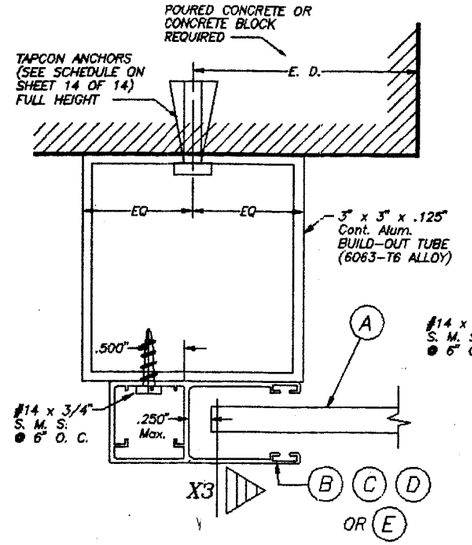

SECTION P – P (3) : BUILD-OUT

SCALE: 1/2" = 1"

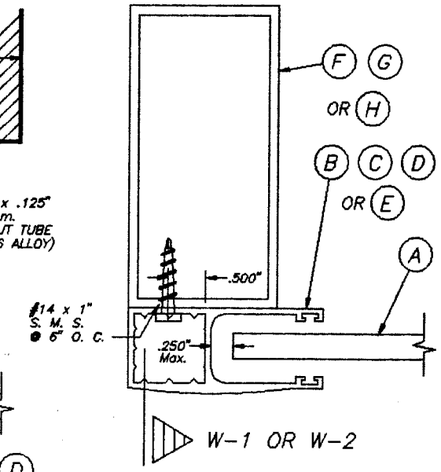

SECTION Q – Q :

MULLION MOUNT (END)

SCALE: 1/2" = 1"

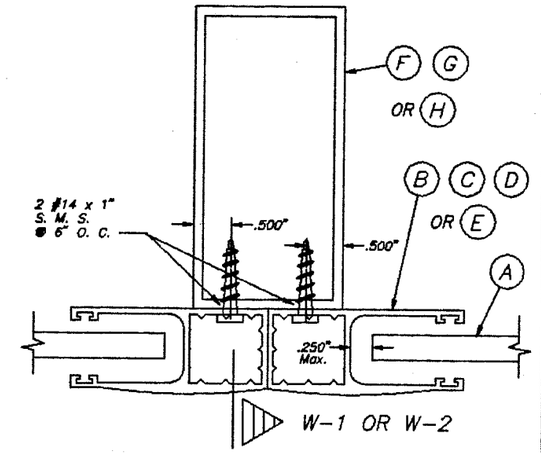

SECTION R – R :

MULLION MOUNT (MULTIPLE)

SCALE: 1/2" = 1"

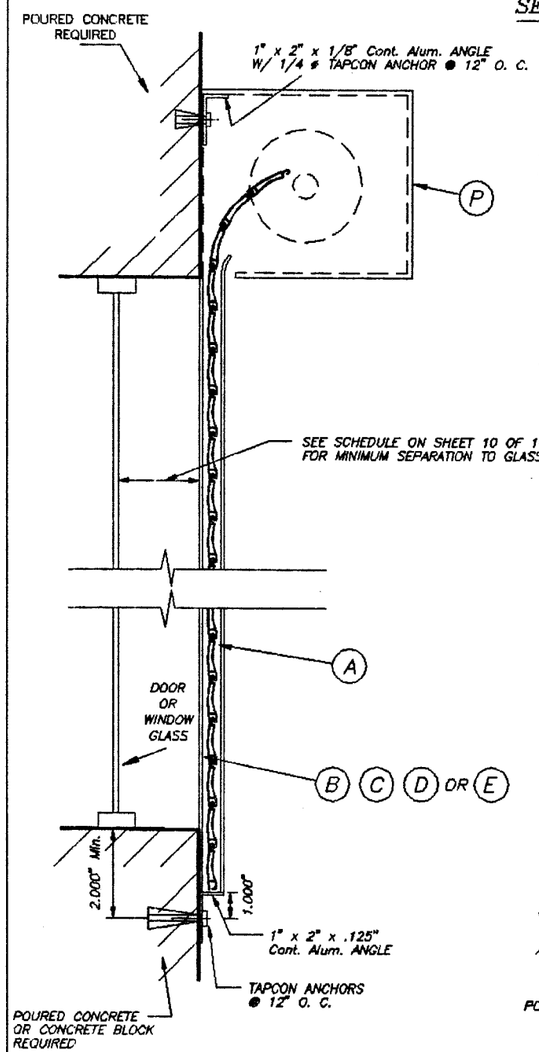

SECTION X – X (1)

N. T. S.

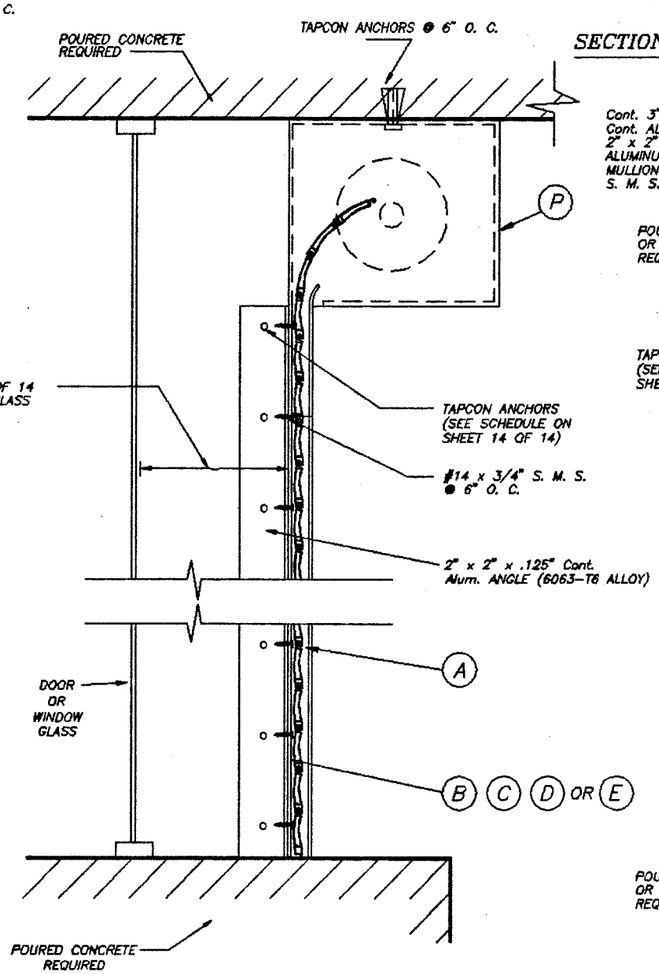

SECTION X –X (2)

N. T. S.

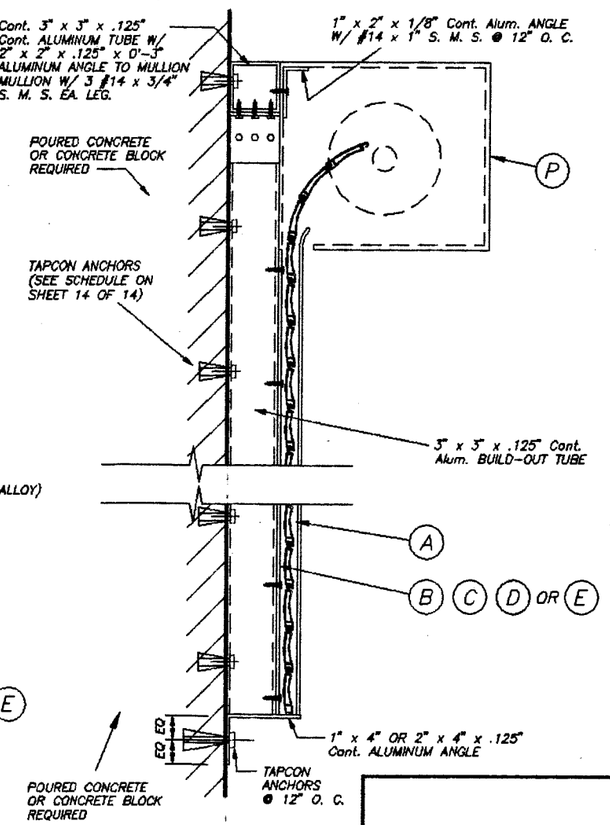

SECTION X – X (3)

N. T. S.

4/9/98

PRODUCT RENEWED

ACCEPTANCE No. 00-1207.02

EXPIRATION DATE 04/30/2006

By Manuel Perez

PRODUCT CONTROL DIVISION
BUILDING CODE COMPLIANCE OFFICE

APPROVED AS COMPLYING WITH THE SOUTH FLORIDA BUILDING CODE

DATE APRIL 30 1998

BY Manuel Perez

PRODUCT CONTROL DIVISION
BUILDING CODE COMPLIANCE OFFICE

ACCEPTANCE NO. 97-1202.03

DADE COUNTY

TILTECO INC.

TILLIT TESTING & ENGINEERING COMPANY

6595 N.W. 36th. St., Ste. 217, VIRGINIA GARDENS, Fl. 33166
Phone : (305)871-1530 . Fax : (305)871-1531

WALTER A. TILLIT Jr., P. E.
FLORIDA Lic. # 44167

63 mm EXTRUDED ROLL-UP SHUTTER

HOMESHIELD INDUSTRIES, INC.

3585 E. 10th. COURT
HEALIAH, FLORIDA 33013

REV. No	DESCRIPTION	DATE	REV. No	DESCRIPTION	DATE
1	–	–	3		
2	–	–	4		

AS SHOWN SCALE

9/22/97 DATE

97 – 245 DRAWING No

SHEET 4 OF 14

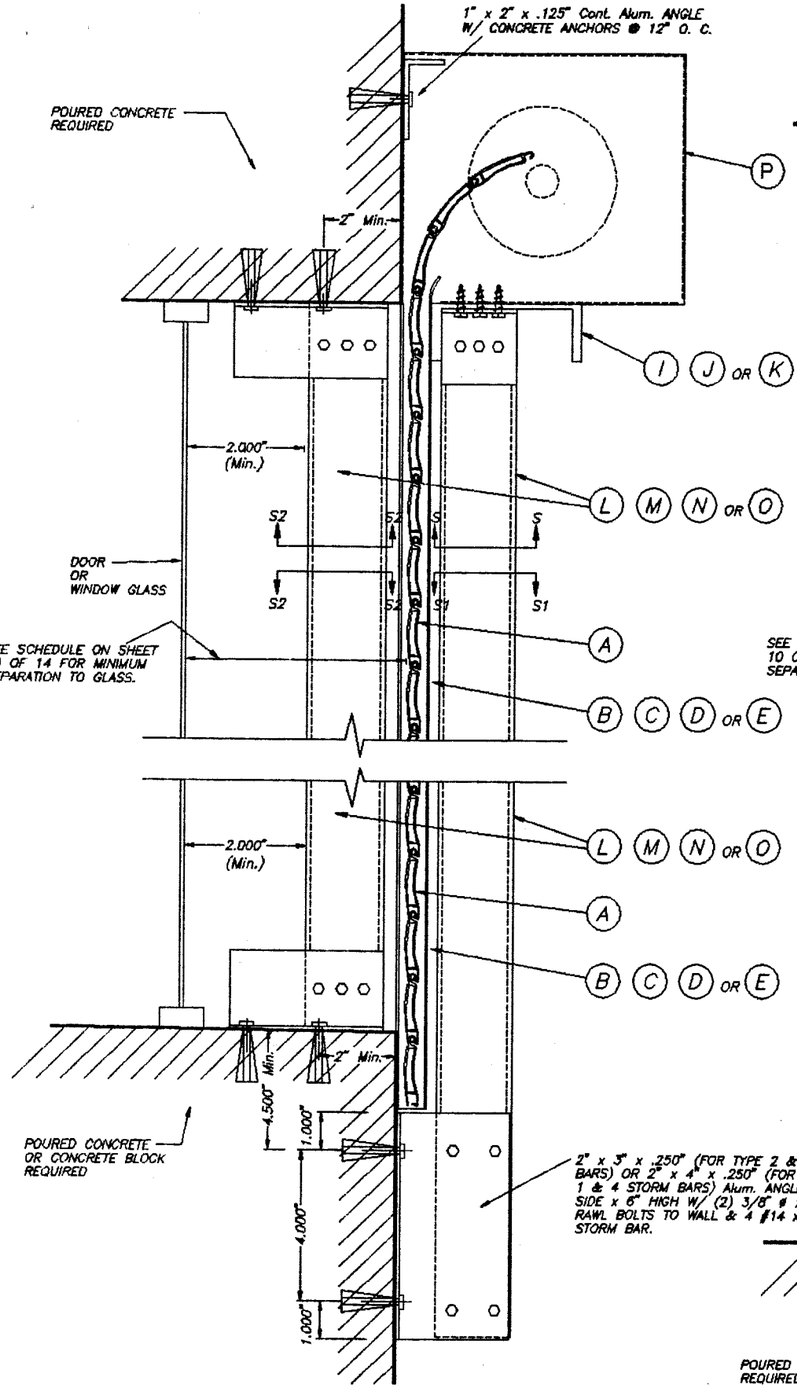

WALL MOUNTING : SECTION V – V (1)

SCALE : 1/4" = 1"

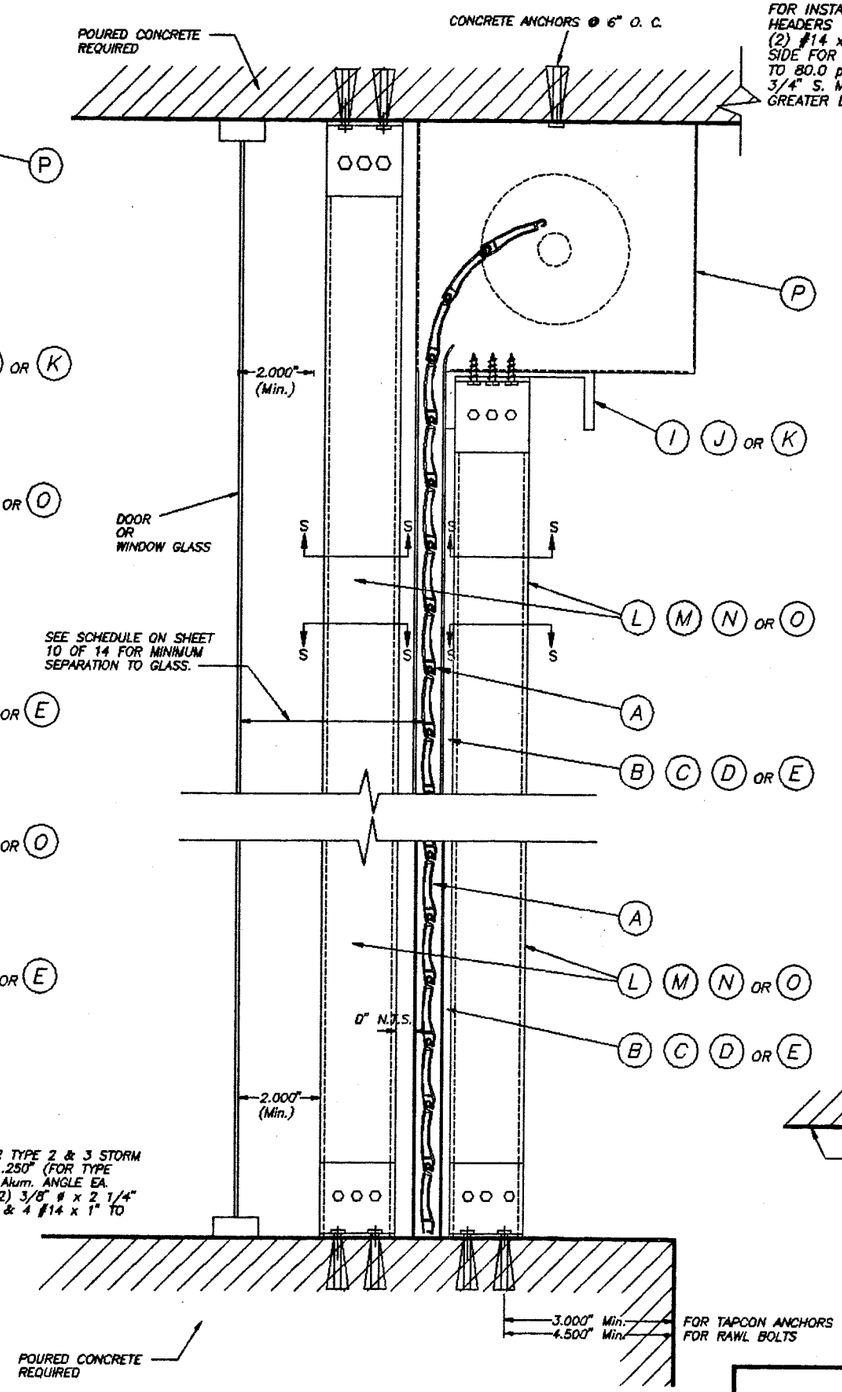

CEILING & FLOOR MOUNTING : SECTION V – V (2)

SCALE : 1/4" = 1"

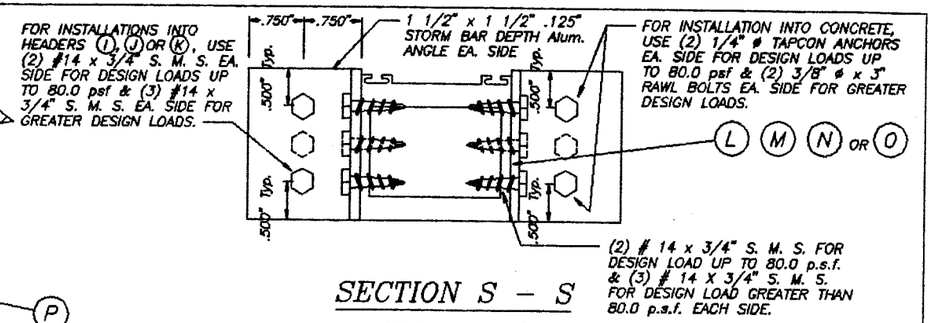

SECTION S – S

SCALE : 1/2" = 1"

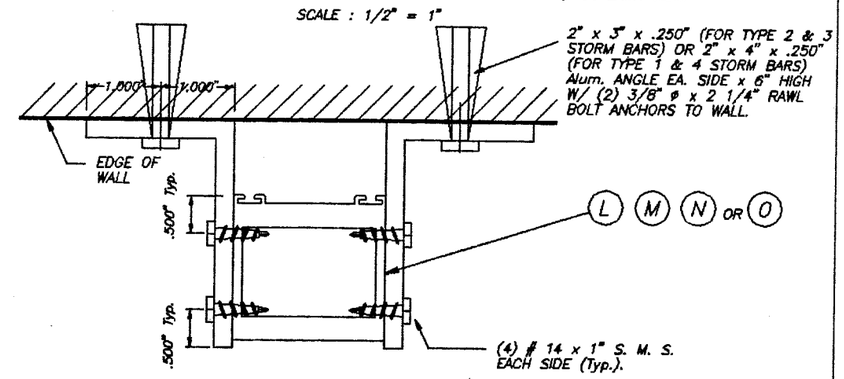

SECTION S1 – S1

SCALE : 1/2" = 1"

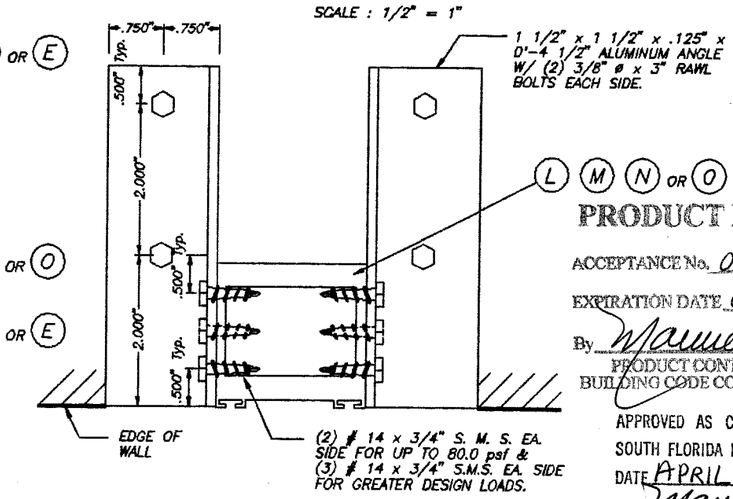

SECTION S2 – S2

SCALE : 1/2" = 1"

PRODUCT RENEWED

ACCEPTANCE No. 00-1207.02

EXPIRATION DATE 04/30/2008

By Manuel Perez

PRODUCT CONTROL DIVISION
BUILDING CODE COMPLIANCE OFFICE

APPROVED AS COMPLYING WITH THE SOUTH FLORIDA BUILDING CODE

DATE APRIL 30 1998

BY Manuel Perez

PRODUCT CONTROL DIVISION

BUILDING CODE COMPLIANCE OFFICE

ACCEPTANCE NO. 97-1202.03

DADE COUNTY

7/9/98

TILTECO INC.
TILLIT TESTING & ENGINEERING COMPANY
6595 N.W. 36th. St., Ste. 217, VIRGINIA GARDENS, Fl. 33166
Phone : (305)871-1530 . Fax : (305)871-1531

WALTER A. TILLIT Jr., P. E.
FLORIDA Lic. # 44167

63 mm EXTRUDED ROLL-UP SHUTTER

HOMESHIELD INDUSTRIES, INC.
3585 E. 10th. COURT
HEALIAH, FLORIDA 33013

REV. No	DESCRIPTION	DATE	REV. No	DESCRIPTION	DATE
1	–	–	3		
2	–	–	4		

AS SHOWN SCALE

9/22/97 DATE

97 – 245 DRAWING No

SHEET 5 OF 14

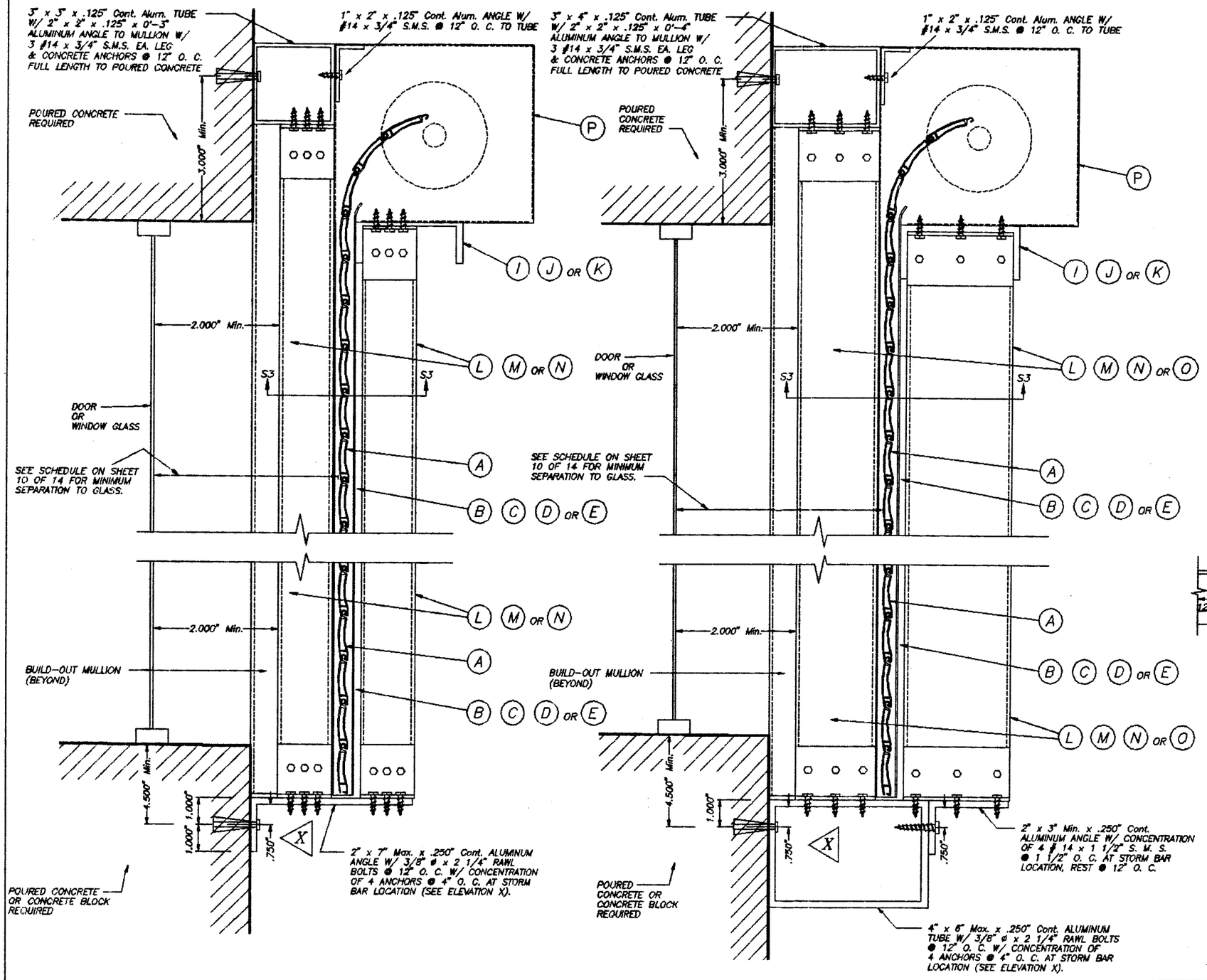

CASE I

CASE II

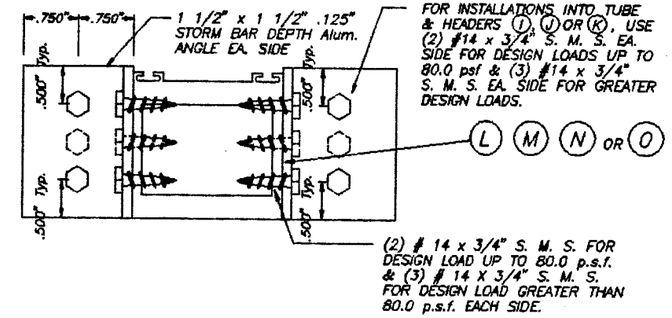

SECTION S3 – S3

SCALE : 1/2" = 1"

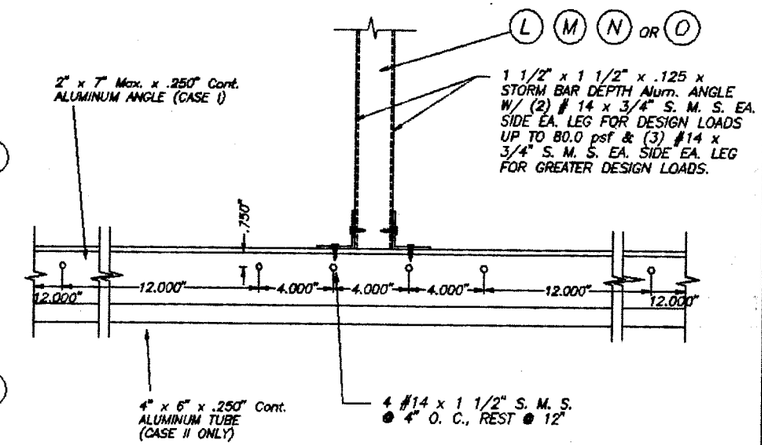

ELEVATION X

SCALE : 1/8" = 1"

PRODUCT RENEWED

ACCEPTANCE No. 00-1207.02

EXPIRATION DATE 04/30/2006

By [signature]

PRODUCT CONTROL DIVISION
BUILDING CODE COMPLIANCE OFFICE

APPROVED AS COMPLYING WITH THE SOUTH FLORIDA BUILDING CODE

DATE APRIL 30 1998

BY [signature]

PRODUCT CONTROL DIVISION
BUILDING CODE COMPLIANCE OFFICE

ACCEPTANCE NO. 97-1202.03

DADE COUNTY

STORM BAR CONNECTION AT BUILD-OUT INSTALLATION : SECTIONS V – V (3)

SCALE : 1/4" = 1"

[signature]
7/9/98

TILTECO INC.
TILLIT TESTING & ENGINEERING COMPANY
6595 N.W. 36th. St., Ste. 217, VIRGINIA GARDENS, FL. 33166
Phone : (305)871-1530 . Fax : (305)871-1531

WALTER A. TILLIT Jr., P. E.
FLORIDA Lic. # 44167

63 mm EXTRUDED ROLL UP SHUTTER

HOMESHIELD INDUSTRIES, INC.
3585 E. 10th. COURT
HIALIAH, FLORIDA 33013

REV. No	DESCRIPTION	DATE	REV. No	DESCRIPTION	DATE
1	–	–	3		
2	–	–	4		

AS SHOWN SCALE

9/22/97 DATE

97 – 245 DRAWING No

SHEET 6 OF 14

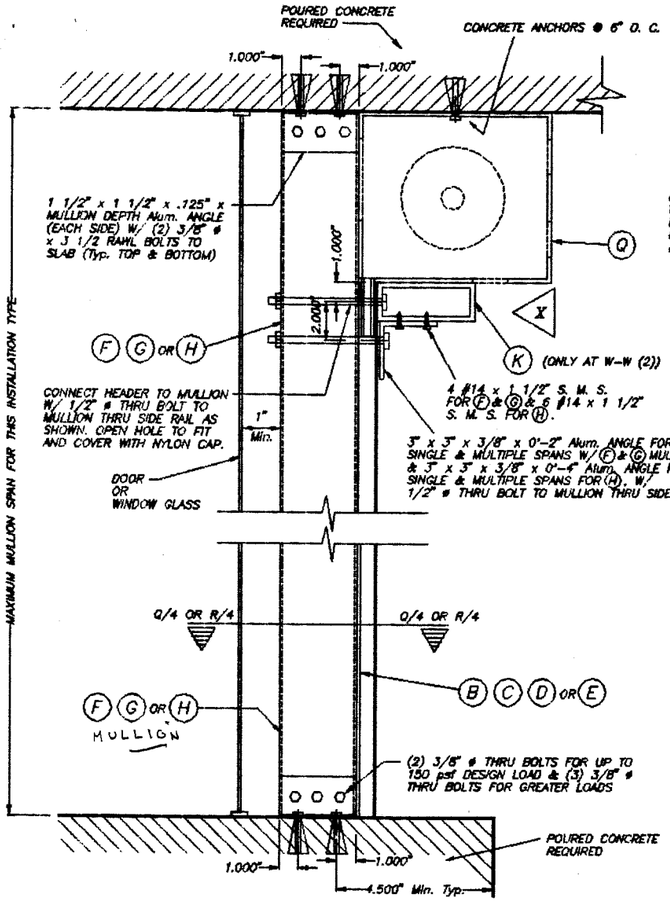

CASE I

FLOOR/CEILING MOUNTING : SECTION W-W (1) & W-W (2)

SCALE : 1/8" = 1"

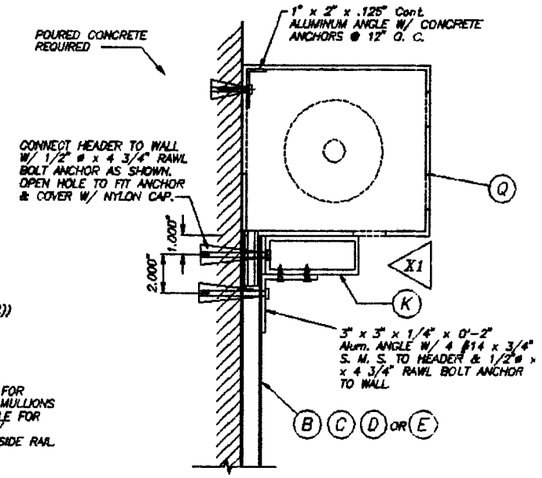

WALL MOUNTING : SECTION W-W (3)

SCALE : 1/8" = 1"

NOTE :
THIS INSTALLATION IS ONLY VALID FOR STORM BARS WITH Max. SPAN = 8'-0", HEADERS WITH 12'-0" Max. SINGLE SPAN & 80 psf MAXIMUM DESIGN LOAD.

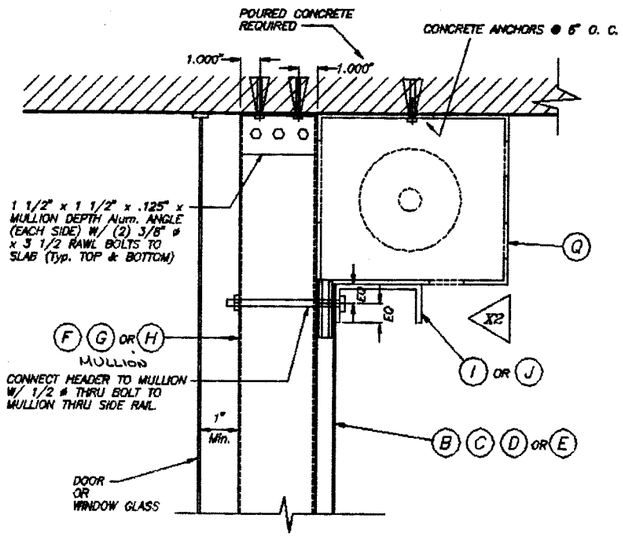

CEILING MOUNTING : SECTION W-W (2)

SCALE : 1/8" = 1"

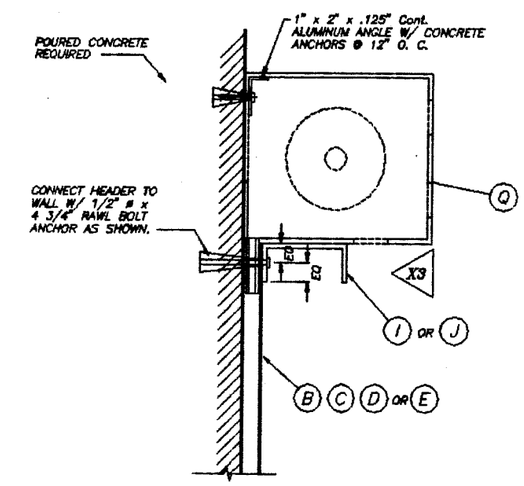

WALL MOUNTING : SECTION W-W (3)

SCALE : 1/8" = 1"

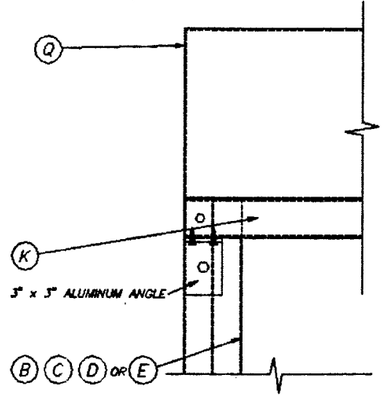

ELEVATION X1

SCALE : 1/8" = 1"

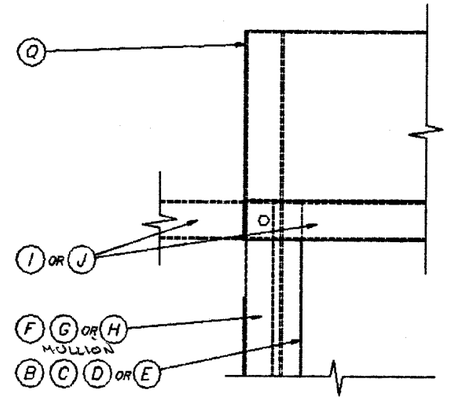

ELEVATION X2

SCALE : 1/8" = 1"

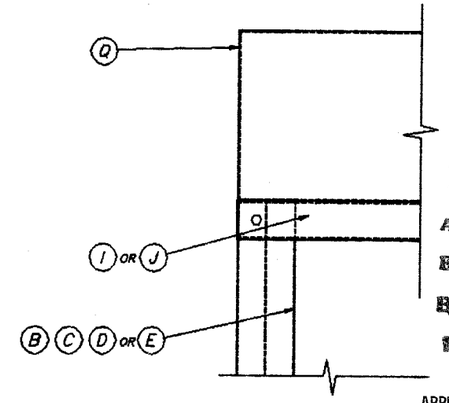

ELEVATION X3

SCALE : 1/8" = 1"

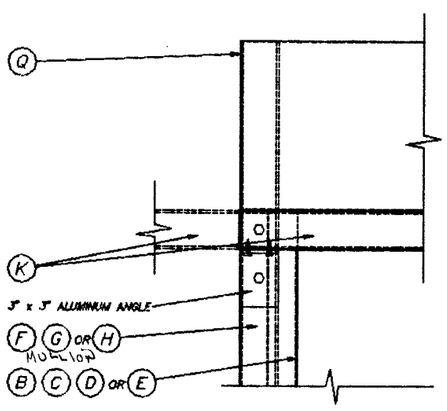

ELEVATION X

SCALE : 1/8" = 1"

TYPICAL HEADER CONNECTION AT ENDS: SECTIONS W-W

PRODUCT RENEWED
ACCEPTANCE No. 00-1207.02
EXPIRATION DATE 04/30/2008
By Manuel Diaz
PRODUCT CONTROL DIVISION
BUILDING CODE COMPLIANCE OFFICE

APPROVED AS COMPLYING WITH THE SOUTH FLORIDA BUILDING CODE
DATE APRIL 30 1998
BY Manuel Diaz
PRODUCT CONTROL DIVISION
BUILDING CODE COMPLIANCE OFFICE
ACCEPTANCE No. 97-1202.03

DADE COUNTY

Walter A. Tillit Jr. 7/9/98

TILTECO INC.
TILLIT TESTING & ENGINEERING COMPANY
6985 N.W. 36th. St., Ste. 217, VIRGINIA GARDENS, FL 33166
Phone : (305)871-1530 . Fax : (305)871-1531
WALTER A. TILLIT Jr., P. E.
FLORIDA Lic. # 44167

63 mm EXTRUDED ROLL-UP SHUTTER

HOMESHIELD INDUSTRIES, INC.
3585 E. 10th. COURT
HIALEAH, FLORIDA 33013

REV. No	DESCRIPTION	DATE	REV. No	DESCRIPTION	DATE
1	–	–	3		
2	–	–	4		

AS SHOWN SCALE
9/22/97 DATE
97 - 245 DRAWING No
SHEET 7 OF 13

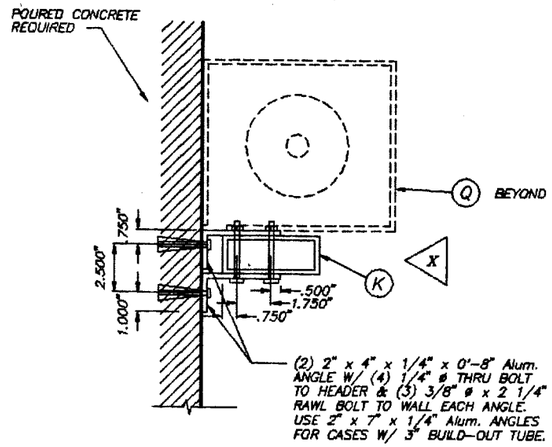

CASE I

WALL MOUNTING : SECTION W-W(3)

SCALE : 1/8" = 1"

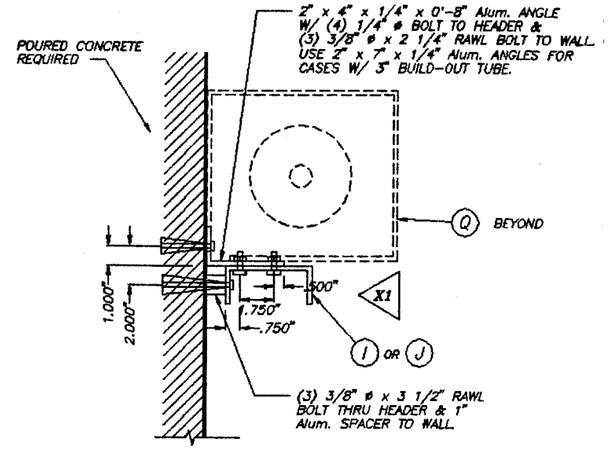

CASE II

WALL MOUNTING : SECTION W-W(3)

SCALE : 1/8" = 1"

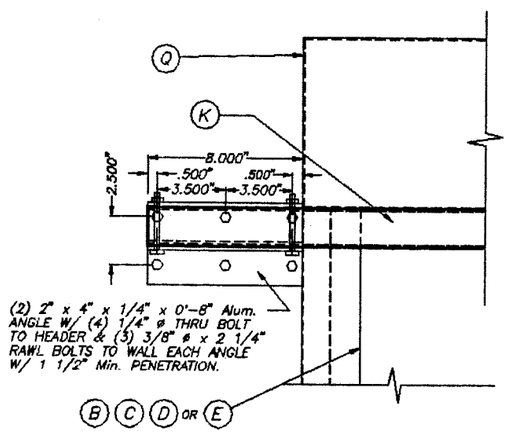

ELEVATION X

SCALE : 1/8" = 1"

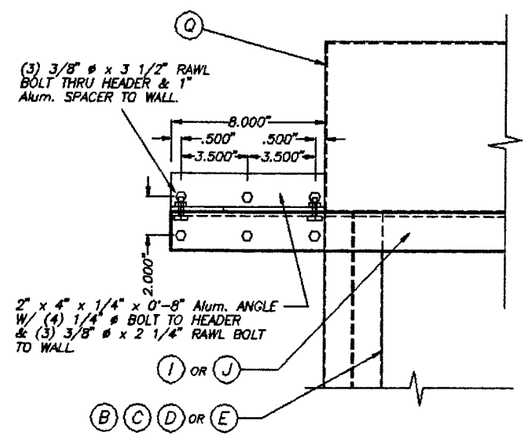

ELEVATION X1

SCALE : 1/8" = 1"

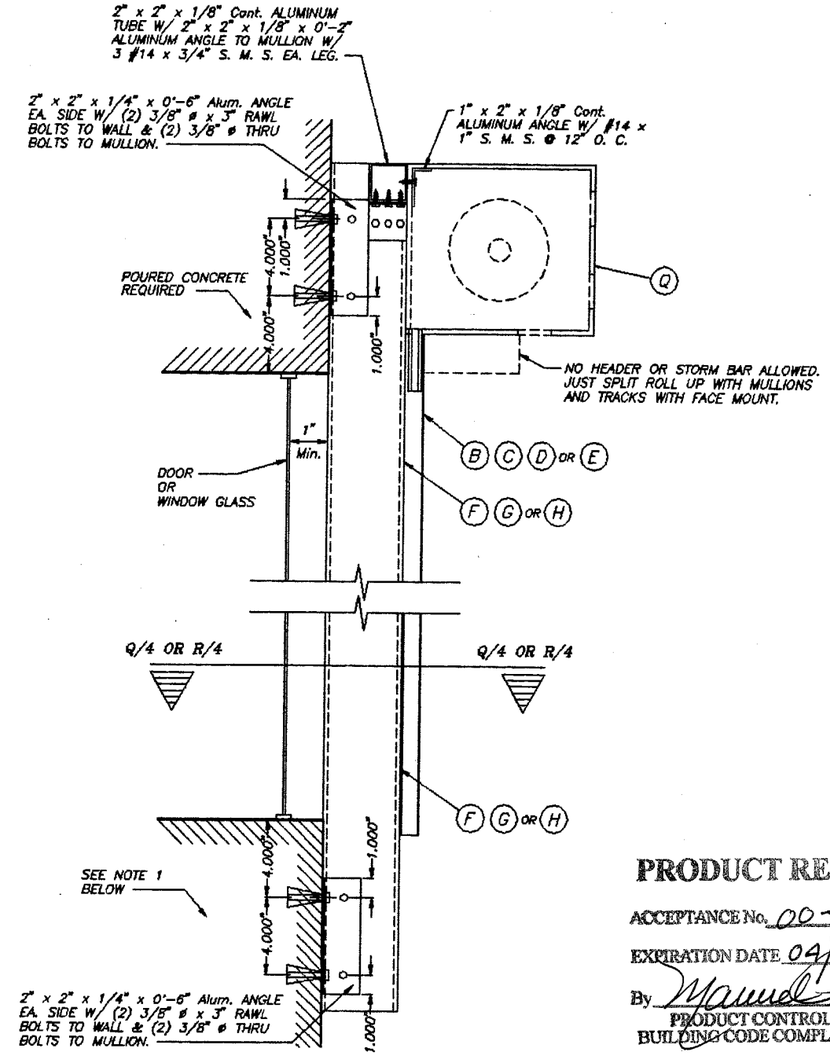

WALL MOUNTING : MULLION CONNECTION AT TOP & BOTTOM : SECTION W-W (1)

SCALE : 1/8" = 1"

NOTE 1 :
EXISTING WALL MAY BE POURED CONCRETE OR CONCRETE BLOCK FOR DESIGN LOADS UP TO 80.0 psf AND SHALL BE POURED CONCRETE OR CONCRETE FILLED BLOCKS FOR GREATER LOADS.

PRODUCT RENEWED
ACCEPTANCE No. 00-1207.02
EXPIRATION DATE 04/30/2006
By Manuel Perez
PRODUCT CONTROL DIVISION
BUILDING CODE COMPLIANCE OFFICE

APPROVED AS COMPLYING WITH THE SOUTH FLORIDA BUILDING CODE
DATE APRIL 30 1998
BY Manuel Perez
PRODUCT CONTROL DIVISION
BUILDING CODE COMPLIANCE OFFICE
ACCEPTANCE NO. 97-1202.03

DADE COUNTY

TYPICAL HEADER CONNECTION AT ENDS : SECTIONS W-W (CONTINUED)

Walter A. Tillit Jr.
7/9/98

TILTECO INC.
TILLIT TESTING & ENGINEERING COMPANY
6595 N.W. 36th. St., Ste. 217, VIRGINIA GARDENS, Fl. 33166
Phone : (305)871-1530 . Fax : (305)871-1531
WALTER A. TILLIT Jr., P. E.
FLORIDA Lic. # 44167

63 mm EXTRUDED ROLL-UP SHUTTER

HOMESHIELD INDUSTRIES, INC.
3585 E. 10th. COURT
HIALEAH, FLORIDA 33013

REV. No	DESCRIPTION	DATE	REV. No	DESCRIPTION	DATE
1	–	–	3		
2	–	–	4		

AS SHOWN SCALE
9/22/97 DATE
97 - 245 DRAWING No
SHEET 8 OF 14

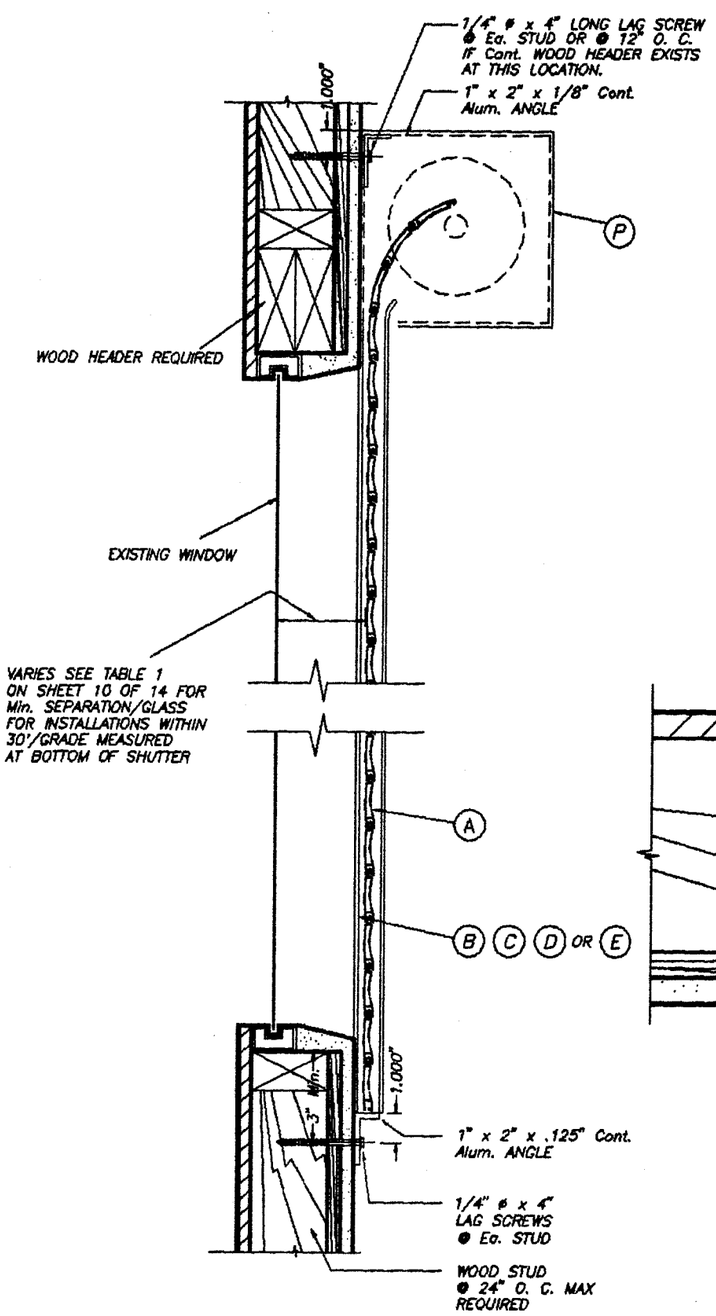

WALL MOUNTING INSTALLATION

SINGLE SPAN CONDITION

N. T. S.

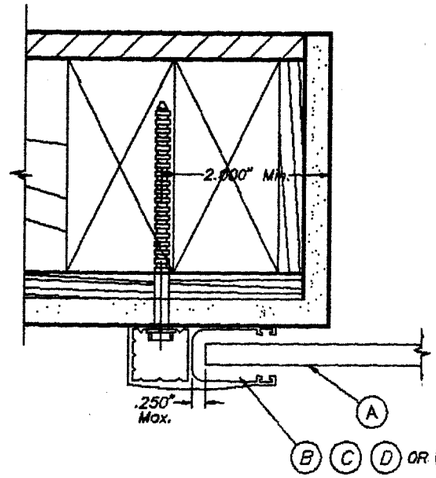

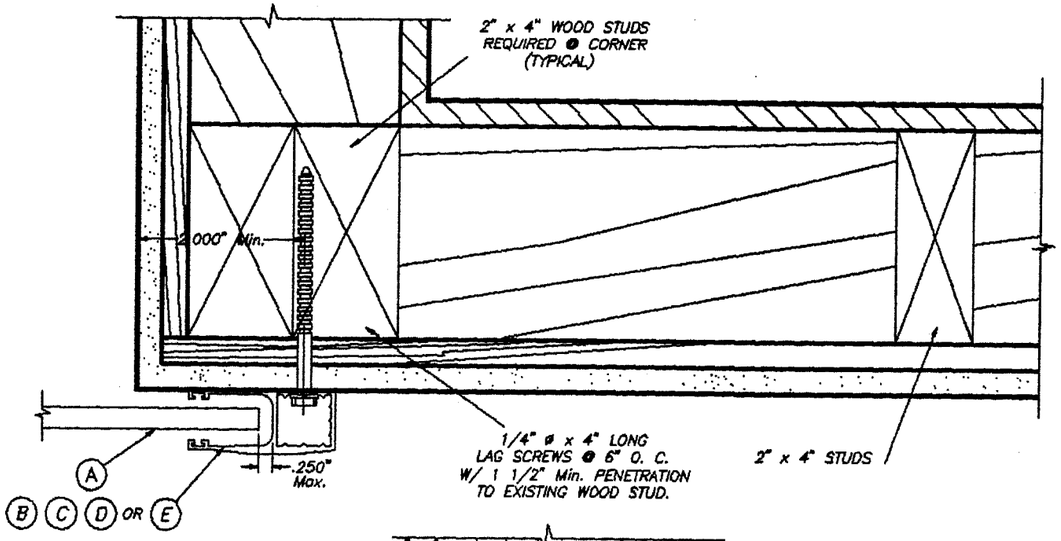

PLAN A (SECTION)

WALL MOUNT

SCALE : 3/8" = 1"

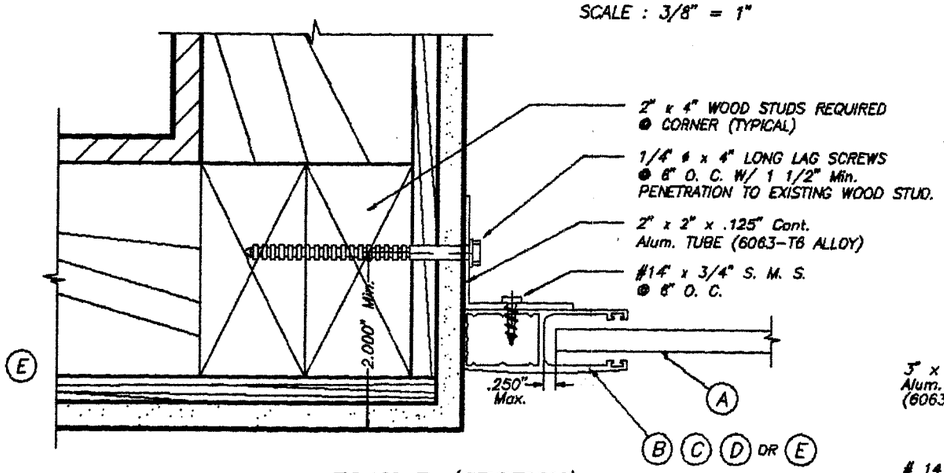

PLAN B (SECTION)

INSIDE MOUNT

SCALE : 3/8" = 1"

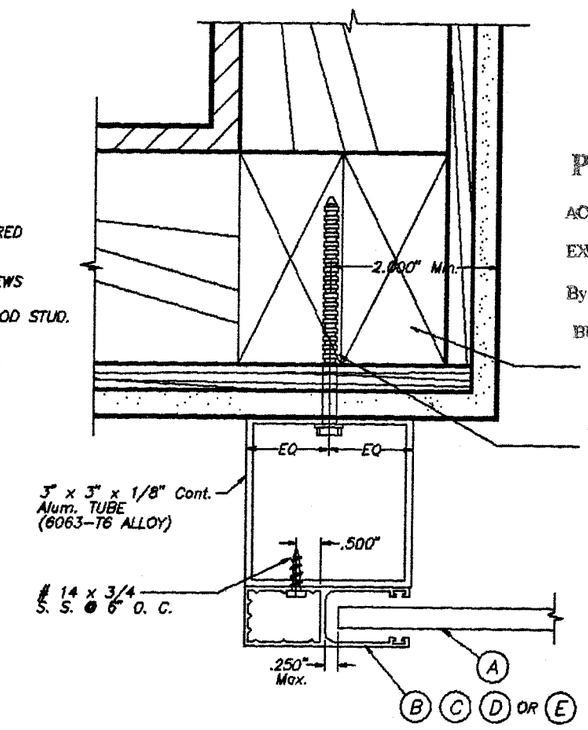

PLAN C (SECTION)

BUILD-OUT

SCALE : 3/8" = 1"

NOTES:

1. INSTALLATIONS ARE ONLY VALID FOR BUILDINGS WITH DESIGN LOADS UP TO 80 psf.
2. FOR NEW FRAME CONSTRUCTION: WOOD MEMBER TO BE SOUTHERN PINE No. 2 W/ SPECIFIC DENSITY OF 0.55 OR EQUAL.
3. MINIMUM PENETRATION OF LAG SCREWS INTO WOOD MEMBER TO BE 1 1/2".

PRODUCT RENEWED
ACCEPTANCE No. 00-1207.02
EXPIRATION DATE 04/30/2006
By [signature]
PRODUCT CONTROL DIVISION
BUILDING CODE COMPLIANCE OFFICE

APPROVED AS COMPLYING WITH THE SOUTH FLORIDA BUILDING CODE
DATE APRIL 30 19 98
BY [signature]
PRODUCT CONTROL DIVISION
BUILDING CODE COMPLIANCE OFFICE
ACCEPTANCE NO. 97-1202.03

DADE COUNTY

[signature]
4/9/98

TILLTECO INC.
TILLIT TESTING & ENGINEERING COMPANY
6595 N.W. 36th. St., Ste. 217, VIRGINIA GARDENS, FL 33166
Phone : (305)871-1530 . Fax : (305)871-1531
WALTER A. TILLIT Jr., P. E.
FLORIDA Lic. 44167

63 mm EXTRUDED ROLL-UP SHUTTER

HOMESHIELD INDUSTRIES, INC.
3585 E 10th. COURT
HIALEAH, FLORIDA 33013

REV. No	DESCRIPTION	DATE	REV. No	DESCRIPTION	DATE
1	–	–	3		
2	–	–	4		

AS SHOWN SCALE
9/22/97 DATE
97 – 245 DRAWING No
SHEET 9 OF 14

SLAT PERFORMANCE CHART

MAXIMUM DESIGN PRESSURE RATING "W" (p. s. f.) AND CORRESPONDING MAXIMUM SLAT SPAN "L" FOR TYPE 1 SLAT (USE NEGATIVE PRESSURE VALUES AS PER ASCE 7-88)

DESIGN LOAD "W" (p.s.f.)	SLAT TYPE 1					
	MAXIMUM SLAT SPAN *		MINIMUM SEPARATION TO GLASS			
	SINGLE UNIT *	MULTIPLE UNIT *	SINGLE UNIT **	MULTIPLE UNIT **	SINGLE UNIT ***	MULTIPLE UNIT ***
40.0	5'-6"	5'-6"	3"	3"	3"	3"
45.0	5'-6"	5'-6"	3"	3"	3"	3"
50.0	5'-4"	5'-4"	3"	3"	3"	3"
55.0	5'-2"	5'-2"	3"	3"	3"	3"
60.0	5'-0"	5'-0"	3"	3"	3"	3"
65.0	4'-10"	4'-10"	3"	3"	3"	3"
70.0.	4'-9"	4'-9"	3"	3"	3"	3"
75.0	4'-7"	4'-7"	2 7/8"	2 7/8"	2 5/8"	2 5/8"
80.0	4'-6"	4'-6"	2 7/8"	2 7/8"	2 5/8"	2 5/8"
85.0	4'-5"	4'-5"	2 7/8"	2 7/8"	2 5/8"	2 5/8"
90.0	4'-4"	4'-4"	2 7/8"	2 7/8"	2 5/8"	2 5/8"
95.0	4'-3"	4'-3"	2 7/8"	2 7/8"	2 5/8"	2 5/8"
100.0	4'-2"	4'-2"	2 7/8"	2 7/8"	2 5/8"	2 5/8"
105.0	4'-2"	4'-2"	2 7/8"	2 7/8"	2 5/8"	2 5/8"
110.0	4'-1"	4'-1"	2 7/8"	2 7/8"	2 5/8"	2 5/8"
115.0	4'-0"	4'-0"	2 7/8"	2 7/8"	2 5/8"	2 5/8"
120.0	3'-11"	3'-11"	2 7/8"	2 7/8"	2 1/2"	2 1/2"
125.0	3'-11"	3'-11"	2 7/8"	2 7/8"	2 1/2"	2 1/2"
130.0	3'-10"	3'-10"	2 7/8"	2 7/8"	2 1/2"	2 1/2"

DESIGN LOAD "W" (p.s.f.)	SLAT TYPE 1					
	MAXIMUM SLAT SPAN *		MINIMUM SEPARATION TO GLASS			
	SINGLE UNIT *	MULTIPLE UNIT *	SINGLE UNIT **	MULTIPLE UNIT **	SINGLE UNIT ***	MULTIPLE UNIT ***
135.0	3'-10"	3'-10"	2 7/8"	2 7/8"	2 1/2"	2 1/2"
140.0	3'-9"	3'-9"	2 7/8"	2 7/8"	2 1/2"	2 1/2"
145.0	3'-9"	3'-9"	2 7/8"	2 7/8"	2 1/2"	2 1/2"
150.0	3'-8"	3'-8"	2 7/8"	2 7/8"	2 3/8"	2 3/8"
155.0	3'-8"	3'-8"	2 7/8"	2 7/8"	2 3/8"	2 3/8"
160.0	3'-7"	3'-7"	2 7/8"	2 7/8"	2 3/8"	2 3/8"
165.0	3'-7"	3'-7"	2 7/8"	2 7/8"	2 3/8"	2 3/8"
170.0	3'-6"	3'-6"	2 7/8"	2 7/8"	2 3/8"	2 3/8"
175.0	3'-6"	3'-6"	2 7/8"	2 7/8"	2 3/8"	2 3/8"
180.0	3'-5"	3'-5"	2 7/8"	2 7/8"	2 3/8"	2 3/8"
185.0	3'-5"	3'-5"	2 7/8"	2 7/8"	2 3/8"	2 3/8"
190.0	3'-5"	3'-5"	2 7/8"	2 7/8"	2 3/8"	2 3/8"
195.0	3'-4"	3'-4"	2 7/8"	2 7/8"	2 3/8"	2 3/8"
200.0	3'-4"	3'-4"	2 7/8"	2 7/8"	2 3/8"	2 3/8"
205.0	3'-4"	3'-4"	2 7/8"	2 7/8"	2 3/8"	2 3/8"
210.0	3'-3"	3'-3"	2 7/8"	2 7/8"	2 3/8"	2 3/8"
215.0	3'-3"	3'-3"	2 7/8"	2 7/8"	2 3/8"	2 3/8"
220.0	3'-3"	3'-3"	2 7/8"	2 7/8"	2 3/8"	2 3/8"
226.3	3'-2"	3'-2"	2 7/8"	2 7/8"	2 3/8"	2 3/8"

PRODUCT RENEWED

ACCEPTANCE No. 00-1207.02
EXPIRATION DATE 04/30/2008
By Manuel Perez
PRODUCT CONTROL DIVISION
BUILDING CODE COMPLIANCE OFFICE

* SPANS VALID FOR ALL APPLICABLE ELEVATIONS OF BUILDING.

** MINIMUM SEPARARTION TO GLASS FOR SHUTTERS INSTALLED WITHIN THE FIRST 30'-0" ELEVATION OF BUILDING MEASURED AT BOTTOM OF SHUTTER AND MAXIMUM SLAT SPAN. SEE TABLE 1 FOR MINIMUM SEPARATION TO GLASS FOR SPANS LESS THAN Max. ALLOWED.

*** MINIMUM SEPARATION TO GLASS FOR SHUTTERS INSTALLED ABOVE 30'-0" ELEVATION OF BUILDING, MEASURED AT BOTTOM OF SHUTTER.

NOTE: MINIMUM SEPARATION TO GLASS FOR SINGLE AND MULTIPLE UNITS SHALL BE MEASURED FROM BACK OF SLAT TO GLASS.

TABLE 1 :

SLAT SPAN (ft)		Min. SEPARATION TO GLASS	
SINGLE UNIT	MULTIPLE UNIT	SINGLE UNIT	MULTIPLE UNIT
4'-8" OR LESS	4'-8" OR LESS	2 7/8"	2 7/8"
>4'-8" TO 5'-6"	>4'-8" TO 5'-6"	3"	3"

SIDE RAIL CONDITION FOR TYPE 1 SLAT

NOTE :

TYPE 1 SLAT SHALL ONLY BE USED JOINTLY WITH TYPE 3 & 4 SIDE RAILS FOR A MAXIMUM SLAT SPAN OF 56" AND A MAXIMUM PRESSURE RAITING OF 80 p.s.f. WHICHEVER IS WORSE.
USE TYPE 1 & 2 SIDE RAILS FOR ANY SLAT SPAN OR PRESSURE RATING INDICATED ON SCHEDULES.

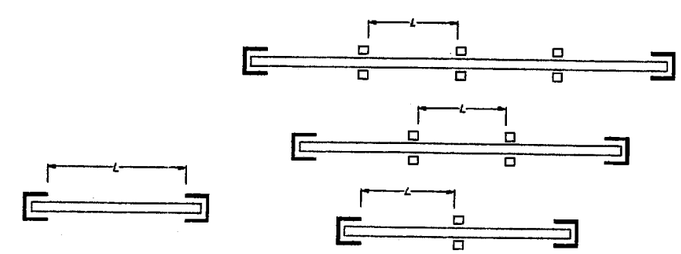

SINGLE SPAN

MULTIPLE SPAN

SPAN LAYOUT

DADE COUNTY

Walter A. Tillit
7/9/98

TILTECO INC.
TILLIT TESTING & ENGINEERING COMPANY
6595 N.W. 36th. St., Sts. 217, VIRGINIA GARDENS, Fl 33166
Phone : (305)871-1530 . Fax : (305)871-1531
WALTER A. TILLIT Jr., P. E.
FLORIDA Lic. 44167

63 mm EXTRUDED ROLL-UP SHUTTER

HOMESHIELD INDUSTRIES, INC.
3585 E. 10th. COURT
HIALEAH, FLORIDA 33013

REV. No	DESCRIPTION	DATE	REV. No	DESCRIPTION	DATE
1	-	-	3		
2	-	-	4		

SCALE: -
DATE: 9/22/97
DRAWING No: 97 - 245
SHEET 10 OF 14

MULLION LOADING CHART

MAXIMUM DESIGN PRESSURE RATING "W" (p. s. f.) AND CORRESPONDING MAXIMUM SPAN "L" (Ft.) FOR A GIVEN TYPE OF MULLION AND MULLION SPACING.

(USE NEGATIVE PRESSURE VALUES AS PER ASCE 7-88)

MAXIMUM DESIGN LOAD "W" (p.s.f.)	TYPE 1 MULLION 2" x 4" x .125"		TYPE 2 MULLION 2" x 5" x .250"			TYPE 3 MULLION 4" x 6" x .188"		
	MULLION SPACING		MULLION SPACING			MULLION SPACING		
	3'-6" OR LESS	> 3'-6" TO 5'	3'-6" OR LESS	> 3'-6" TO 5'	> 5' TO 8'	3'-6" OR LESS	> 3'-6" TO 5'	> 5' TO 8'
40.0	8'-9"	8'-11"	12'-10"	13'-1"	11'-2"	15'-11"	16'-3"	13'-11"
45.0	8'-5"	8'-7"	12'-4"	12'-7"	10'-9"	15'-4"	15'-8"	13'-5"
50.0	8'-1"	8'-3"	11'-11"	12'-2"	10'-5"	14'-10"	15'-1"	12'-11"
55.0	7'-10"	8'-0"	11'-6"	11'-9"	10'-1"	14'-4"	14'-8"	12'-7"
60.0	7'-7"	7'-9"	11'-2"	11'-5"	9'-9"	13'-11"	14'-3"	12'-2"
65.0	7'-5"	7'-7"	10'-11"	11'-2"	9'-6"	13'-7"	13'-10"	11'-10"
70.0	7'-3"	7'-5"	10'-6"	10'-10"	9'-4"	13'-3"	13'-6"	11'-7"
75.0	7'-1"	7'-3"	10'-2"	10'-7"	9'-1"	12'-11"	13'-3"	11'-4"
80.0	6'-11"	7'-1"	9'-10"	10'-5"	8'-11"	12'-8"	12'-11"	11'-1"
85.0	6'-10"	6'-11"	9'-7"	10'-2"	8'-9"	12'-5"	12'-8"	10'-10"
90.0	6'-8"	6'-10"	9'-3"	10'-0"	8'-7"	12'-2"	12'-5"	10'-8"
95.0	6'-7"	6'-8"	9'-0"	9'-10"	8'-5"	12'-0"	12'-3"	10'-6"
100.0	6'-5"	6'-7"	8'-10"	9'-8"	8'-3"	11'-9"	12'-0"	10'-4"
105.0	6'-4"	6'-6"	8'-7"	9'-6"	8'-2"	11'-7"	11'-10"	10'-2"
110.0	6'-3"	6'-4"	8'-5"	9'-4"	8'-0"	11'-5"	11'-8"	10'-0"
115.0	6'-2"	6'-3"	8'-3"	9'-3"	7'-11"	11'-3"	11'-6"	9'-10"
120.0	6'-1"	6'-2"	8'-0"	9'-1"	7'-9"	11'-1"	11'-4"	9'-8"
125.0	6'-0"	6'-1"	7'-11"	9'-0"	7'-8"	10'-11"	11'-2"	9'-7"
130.0	5'-11"	6'-0"	7'-9"	8'-10"	7'-7"	10'-10"	11'-0"	9'-5"

MAXIMUM DESIGN LOAD "W" (p.s.f.)	TYPE 1 MULLION 2" x 4" x .125"		TYPE 2 MULLION 2" x 5" x .250"			TYPE 3 MULLION 4" x 6" x .188"		
	MULLION SPACING		MULLION SPACING			MULLION SPACING		
	3'-6" OR LESS	> 3'-6" TO 5'	3'-6" OR LESS	> 3'-6" TO 5'	> 5' TO 8'	3'-6" OR LESS	> 3'-6" TO 5'	> 5' TO 8'
135.0	5'-10"	6'-11"	7'-7"	8'-9"	7'-6"	10'-8"	10'-11"	9'-4"
140.0	5'-9"	5'-11"	7'-5"	8'-8"	7'-5"	10'-7"	10'-9"	9'-3"
145.0	5'-8"	5'-10"	7'-4"	8'-7"	7'-4"	10'-5"	10'-8"	9'-1"
150.0	5'-8"	5'-9"	7'-2"	8'-5"	7'-3"	10'-4"	10'-6"	9'-0"
155.0	5'-7"	5'-8"	7'-1"	8'-4"	7'-2"	10'-2"	10'-5"	8'-11"
160.0	5'-6"	5'-8"	7'-0"	8'-3"	7'-1"	10'-1"	10'-4"	8'-10"
165.0	5'-5"	5'-7"	6'-10"	8'-2"	7'-0"	10'-0"	10'-2"	8'-9"
170.0	5'-5"	5'-6"	6'-9"	8'-1"	6'-11"	9'-11"	10'-1"	8'-8"
175.0	5'-4"	5'-6"	6'-8"	8'-0"	6'-11"	9'-10"	10'-0"	8'-7"
180.0	5'-4"	5'-5"	6'-7"	7'-11"	6'-10"	9'-8"	9'-11"	8'-6"
185.0	5'-3"	5'-4"	6'-6"	7'-11"	6'-9"	9'-7"	9'-10"	8'-5"
190.0	5'-3"	5'-4"	6'-5"	7'-10"	6'-8"	9'-6"	9'-9"	8'-4"
195.0	5'-2"	5'-3"	6'-4"	7'-9"	6'-8"	9'-5"	9'-8"	8'-3"
200.0	5'-1"	5'-3"	6'-3"	7'-8"	6'-7"	9'-4"	9'-7"	8'-2"
205.0	5'-1"	5'-2"	6'-2"	7'-7"	6'-6"	9'-4"	9'-6"	8'-2"
210.0	5'-0"	5'-2"	6'-1"	7'-7"	6'-6"	9'-3"	9'-5"	8'-1"
215.0	5'-0"	5'-1"	6'-0"	7'-6"	6'-5"	9'-2"	9'-4"	8'-0"
220.0	5'-0"	5'-1"	5'-11"	7'-5"	6'-5"	9'-1"	9'-3"	7'-11"
226.3	4'-11"	5'-0"	5'-10"	7'-5"	6'-4"	9'-0"	9'-2"	7'-10"

PRODUCT RENEWED
ACCEPTANCE No. 00-1207.02
EXPIRATION DATE 04/30/2006
By Manuel Perez
PRODUCT CONTROL DIVISION
BUILDING CODE COMPLIANCE OFFICE

APPROVED AS COMPLYING WITH THE SOUTH FLORIDA BUILDING CODE
DATE APRIL 30 1998
BY Manuel Perez
PRODUCT CONTROL DIVISION
BUILDING CODE COMPLIANCE OFFICE
ACCEPTANCE NO. 97-1202.03

DADE COUNTY

7/9/98

TILTECO INC.
TILLIT TESTING & ENGINEERING COMPANY
6595 N.W. 36th. St., Ste. 217, VIRGINIA GARDENS, Fl 33166
Phone : (305)871-1530 . Fax : (305)871-1531
WALTER A. TILLIT Jr., P. E.
FLORIDA Lic. 44167

63 mm EXTRUDED ROLL-UP SHUTTER

HOMESHIELD INDUSTRIES, INC.
3585 E. 10th. COURT
HIALEAH, FLORIDA 33013

REV. No	DESCRIPTION	DATE	REV. No	DESCRIPTION	DATE
1	–	–	3		
2	–	–	4		

SCALE –
DATE 9/22/97
DRAWING No 97 – 245
SHEET 11 OF 14

HEADER LOADING CHART

MAXIMUM DESIGN PRESSURE RATING "W" (p. s. f.) AND CORRESPONDING MAXIMUM SPAN "L" (Ft.) FOR A GIVEN TYPE OF HEADER AND STORM BAR HEIGHT (Ft.)

(USE NEGATIVE PRESSURE VALUES AS PER ASCE 7-88)

MAXIMUM DESIGN LOAD "W" (p.s.f.)	TYPE 1 HEADER 1 1/2" x 4" CHANNEL		TYPE 2 HEADER 2" x 4 1/2" CHANNEL		TYPE 3 HEADER 2" x 5" TUBE		
	STORM BAR HEIGHT		STORM BAR HEIGHT		STORM BAR HEIGHT		
	5' OR LESS	> 5' TO 8'	5' OR LESS	> 5' TO 8'	5' OR LESS	> 5' TO 8'	> 8' TO 10'
40.0	13'-6"	10'-8"	16'-0"	13'-5"	18'-0"	16'-0"	15'-2"
45.0	12'-9"	10'-1"	15'-6"	12'-8"	17'-6"	15'-6"	14'-8"
50.0	12'-1"	9'-7"	15'-1"	12'-0"	17'-0"	15'-2"	14'-2"
55.0	11'-6"	9'-1"	14'-6"	11'-5"	16'-7"	14'-9"	13'-6"
60.0	11'-1"	8'-9"	13'-10"	10'-11"	16'-3"	14'-6"	12'-11"
65.0	10'-7"	8'-5"	13'-4"	10'-6"	15'-11"	13'-11"	12'-5"
70.0	10'-3"	8'-1"	12'-10"	10'-2"	15'-8"	13'-5"	12'-0"
75.0	9'-11"	7'-10"	12'-5"	9'-10"	15'-5"	12'-11"	11'-7"
80.0	9'-7"	7'-7"	12'-0"	9'-6"	15'-2"	12'-7"	11'-3"
85.0	9'-3"	7'-4"	11'-8"	9'-2"	14'-11"	12'-2"	10'-11"
90.0	9'-0"	7'-2"	11'-4"	8'-11"	14'-8"	11'-10"	10'-7"
95.0	8'-9"	6'-11"	11'-0"	8'-8"	14'-6"	11'-6"	10'-4"
100.0	8'-7"	6'-9"	10'-9"	8'-6"	14'-2"	11'-3"	10'-0"
105.0	8'-4"	6'-7"	10'-6"	8'-3"	13'-10"	10'-11"	9'-10"
110.0	8'-2"	6'-5"	10'-3"	8'-1"	13'-6"	10'-8"	9'-7"
115.0	8'-0"	6'-4"	10'-0"	7'-11"	13'-3"	10'-6"	9'-4"
120.0	7'-10"	6'-2"	9'-10"	7'-9"	12'-11"	10'-3"	9'-2"
125.0	7'-8"	6'-1"	9'-7"	7'-7"	12'-8"	10'-0"	9'-0"
130.0	7'-6"	5'-11"	9'-5"	7'-5"	12'-5"	9'-10"	8'-10"

MAXIMUM DESIGN LOAD "W" (p.s.f.)	TYPE 1 HEADER 1 1/2" x 4" CHANNEL		TYPE 2 HEADER 2" x 4 1/2" CHANNEL		TYPE 3 HEADER 2" x 5" TUBE		
	STORM BAR HEIGHT		STORM BAR HEIGHT		STORM BAR HEIGHT		
	5' OR LESS	> 5' TO 8'	5' OR LESS	> 5' TO 8'	5" OR LESS	> 5' TO 8"	> 8' TO 10'
135.0	7'-4"	5'-10"	9'-3"	7'-4"	12'-3"	9'-8"	8'-8"
140.0	7'-3"	5'-9"	9'-1"	7'-2"	12'-0"	9'-6"	8'-6"
145.0	7'-1"	5'-7"	8'-11"	7'-1"	11'-9"	9'-4"	8'-4"
150.0	7'-0"	5'-6"	8'-9"	6'-11"	11'-7"	9'-2"	8'-2"
155.0	6'-10"	5'-5"	8'-7"	6'-10"	11'-5"	9'-0"	8'-1"
160.0	6'-9"	5'-4"	8'-6"	6'-9"	11'-3"	8'-11"	8'-0"
165.0	6'-8"	5'-3"	8'-4"	6'-7"	11'-1"	8'-9"	7'-10"
170.0	6'-7"	5'-2"	8'-3"	6'-6"	10'-11"	8'-7"	7'-8"
175.0	6'-6"	5'-1"	8'-1"	6'-5"	10'-9"	8'-6"	7'-7"
180.0	6'-5"	5'-0"	8'-0"	6'-4"	10'-7"	8'-4"	7'-6"
185.0	6'-3"	5'-0"	7'-11"	6'-3"	10'-5"	8'-3"	7'-5"
190.0	6'-2"	4'-11"	7'-9"	6'-2"	10'-4"	8'-2"	7'-3"
195.0	6'-2"	4'-10"	7'-8"	6'-1"	10'-2"	8'-0"	7'-2"
200.0	6'-1"	4'-9"	7'-7"	6'-0"	10'-0"	7'-11"	7'-1"
205.0	6'-0"	4'-9"	7'-6"	5'-11"	9'-11"	7'-10"	7'-0"
210.0	5'-11"	4'-8"	7'-5"	5'-10"	9'-10"	7'-9"	6'-11"
215.0	5'-10"	4'-7"	7'-4"	5'-9"	9'-8"	7'-8"	6'-10"
220.0	5'-9"	4'-7"	7'-3"	5'-9"	9'-7"	7'-7"	6'-9"
226.3	5'-8"	4'-6"	7'-2"	5'-8"	9'-5"	7'-5"	6'-8"

PRODUCT RENEWED
ACCEPTANCE No. 00-1207.02
EXPIRATION DATE 04/30/2006
By Manuel Perez
PRODUCT CONTROL DIVISION
BUILDING CODE COMPLIANCE OFFICE

APPROVED AS COMPLYING WITH THE SOUTH FLORIDA BUILDING CODE
DATE APRIL 30 1998
BY Manuel Perez
PRODUCT CONTROL DIVISION
BUILDING CODE COMPLIANCE OFFICE
ACCEPTANCE NO. 97-1202.03

DADE COUNTY

Walter A. Tillit
4/9/98

TILTECO INC.
TILLIT TESTING & ENGINEERING COMPANY
6595 N.W. 36th St., Ste. 217, VIRGINIA GARDENS, Fl 33166
Phone : (305)871-1530 . Fax : (305)871-1531
WALTER A. TILLIT Jr., P. E.
FLORIDA Lic. 44167

63 mm EXTRUDED ROLL-UP SHUTTER

HOMESHIELD INDUSTRIES, INC.
3585 E. 10th. COURT
HIALEAH, FLORIDA 33013

REV. No	DESCRIPTION	DATE	REV. No	DESCRIPTION	DATE
1	-	-	3		
2	-	-	4		

SCALE: -
DATE: 9/22/97
DRAWING No: 97 - 245
SHEET 12 OF 14

STORM BAR LOADING CHART

MAXIMUM DESIGN PRESSURE RATING "W" (p. s. f.) AND CORRESPONDING MAXIMUM SPAN "L" FOR A GIVEN TYPE OF STORM BAR AND STORM BAR SPACING. (USE NEGATIVE PRESSURE VALUES AS PER ASCE 7-88)

MAXIMUM DESIGN LOAD "W" (p.s.f.)	TYPE 1 STORM BAR .750" x 2.875" EXTRUDED			TYPE 2 STORM BAR 2" x 1.812" EXTRUDED			TYPE 3 STORM BAR 2" x 2 1/2" EXTRUDED			TYPE 4 STORM BAR 2" x 4" x .250" EXTRUDED		
	STORM BAR SPACING *			STORM BAR SPACING *			STORM BAR SPACING *			STORM BAR SPACING *		
	3' OR LESS	> 3' TO 4'	> 4' TO 5'	3' OR LESS	> 3' TO 4'	> 4' TO 5'	3' OR LESS	> 3' TO 4'	> 4' TO 5'	3' OR LESS	> 3' TO 4'	> 4' TO 5'
40.0	7'-3"	7'-3"	6'-8"	5'-9"	5'-9"	5'-9"	7'-8"	7'-8"	7'-6"	9'-7"	9'-7"	9'-7"
45.0	7'-3"	7'-0"	6'-3"	5'-9"	5'-9"	5'-9"	7'-8"	7'-8"	7'-4"	9'-7"	9'-7"	9'-7"
50.0	7'-3"	6'-8"	5'-11"	5'-9"	5'-9"	5'-9"	7'-8"	7'-6"	7'-1"	9'-7"	9'-7"	9'-7"
55.0	7'-3"	6'-4"	5'-8"	5'-9"	5'-9"	5'-9"	7'-8"	7'-4"	6'-11"	9'-7"	9'-7"	9'-7"
60.0	7'-0"	6'-1"	5'-5"	5'-9"	5'-9"	5'-9"	7'-8"	7'-2"	6'-10"	9'-7"	9'-7"	9'-5"
65.0	6'-9"	5'-10"	5'-3"	5'-9"	5'-9"	5'-8"	7'-7"	7'-1"	6'-8"	9'-7"	9'-7"	9'-3"
70.0	6'-6"	5'-7"	5'-0"	5'-9"	5'-9"	5'-7"	7'-5"	7'-0"	6'-6"	9'-7"	9'-7"	9'-1"
75.0	6'-3"	5'-5"	4'-10"	5'-9"	5'-9"	5'-5"	7'-4"	6'-11"	6'-5"	9'-7"	9'-5"	8'-11"
80.0	6'-1"	5'-3"	4'-8"	5'-9"	5'-8"	5'-3"	7'-2"	6'-10"	6'-2"	9'-7"	9'-3"	8'-9"
85.0	5'-11"	5'-1"	4'-7"	5'-9"	5'-7"	5'-1"	7'-1"	6'-8"	6'-0"	9'-7"	9'-1"	8'-8"
90.0	5'-9"	4'-11"	4'-5"	5'-9"	5'-6"	4'-11"	7'-0"	6'-7"	5'-10"	9'-7"	9'-0"	8'-6"
95.0	5'-7"	4'-10"	4'-4"	5'-9"	5'-5"	4'-10"	6'-11"	6'-6"	5'-8"	9'-6"	8'-10"	8'-5"
100.0	5'-5"	4'-8"	4'-2"	5'-9"	5'-3"	4'-8"	6'-10"	6'-4"	5'-6"	9'-5"	8'-9"	8'-3"
105.0	5'-4"	4'-7"	4'-1"	5'-8"	5'-1"	4'-7"	6'-9"	6'-2"	5'-5"	9'-4"	8'-8"	8'-2"
110.0	5'-2"	4'-6"	4'-0"	5'-8"	5'-0"	4'-6"	6'-8"	6'-0"	5'-3"	9'-2"	8'-7"	7'-11"
115.0	5'-1"	4'-5"	3'-11"	5'-7"	4'-11"	4'-5"	6'-7"	5'-11"	5'-2"	9'-1"	8'-6"	7'-9"
120.0	4'-11"	4'-4"	3'-10"	5'-6"	4'-9"	4'-3"	6'-6"	5'-9"	5'-1"	9'-0"	8'-4"	7'-7"
125.0	4'-10"	4'-2"	3'-9"	5'-5"	4'-8"	4'-2"	6'-5"	5'-8"	4'-11"	8'-11"	8'-3"	7'-6"
130.0	4'-9"	4'-1"	3'-8"	5'-4"	4'-7"	4'-1"	6'-3"	5'-6"	4'-10"	8'-10"	8'-2"	7'-4"
135.0	4'-8"	4'-1"	3'-7"	5'-3"	4'-6"	4'-0"	6'-2"	5'-4"	4'-9"	8'-9"	8'-0"	7'-2"
140.0	4'-7"	4'-0"	3'-7"	5'-1"	4'-5"	4'-0"	6'-0"	5'-3"	4'-8"	8'-8"	7'-11"	7'-1"
145.0	4'-6"	3'-11"	3'-6"	5'-0"	4'-4"	3'-11"	5'-11"	5'-2"	4'-7"	8'-7"	7'-9"	6'-11"
150.0	4'-5"	3'-10"	3'-5"	4'-11"	4'-3"	3'-10"	5'-10"	5'-1"	4'-6"	8'-6"	7'-7"	6'-10"
155.0	4'-4"	3'-9"	3'-5"	4'-10"	4'-3"	3'-9"	5'-9"	5'-0"	4'-5"	8'-5"	7'-6"	6'-8"
160.0	4'-4"	3'-9"	3'-4"	4'-9"	4'-2"	3'-9"	5'-8"	4'-11"	4'-5"	8'-4"	7'-4"	6'-7"
165.0	4'-3"	3'-8"	3'-3"	4'-9"	4'-1"	3'-8"	5'-7"	4'-10"	4'-4"	8'-4"	7'-3"	6'-6"
170.0	4'-2"	3'-7"	3'-3"	4'-8"	4'-0"	3'-7"	5'-6"	4'-9"	4'-3"	8'-3"	7'-2"	6'-5"
175.0	4'-1"	3'-7"	3'-2"	4'-7"	4'-0"	3'-7"	5'-5"	4'-8"	4'-2"	8'-2"	7'-1"	6'-4"
180.0	4'-1"	3'-6"	3'-2"	4'-6"	3'-11"	3'-6"	5'-4"	4'-7"	4'-2"	8'-0"	6'-11"	6'-3"
185.0	4'-0"	3'-5"	3'-1"	4'-5"	3'-10"	3'-5"	5'-3"	4'-7"	4'-1"	7'-11"	6'-10"	6'-2"
190.0	3'-11"	3'-5"	3'-1"	4'-5"	3'-10"	3'-5"	5'-2"	4'-6"	4'-0"	7'-10"	6'-9"	6'-1"
195.0	3'-11"	3'-4"	3'-0"	4'-4"	3'-9"	3'-4"	5'-1"	4'-5"	4'-0"	7'-9"	6'-8"	6'-0"
200.0	3'-10"	3'-4"	3'-0"	4'-3"	3'-9"	3'-4"	5'-1"	4'-5"	3'-11"	7'-7"	6'-7"	5'-11"
205.0	3'-10"	3'-4"	2'-11"	4'-3"	3'-8"	3'-3"	5'-0"	4'-4"	3'-10"	7'-6"	6'-6"	5'-10"
210.0	3'-9"	3'-3"	2'-11"	4'-2"	3'-7"	3'-3"	4'-11"	4'-3"	3'-10"	7'-5"	6'-5"	5'-9"
215.0	3'-8"	3'-2"	2'-10"	4'-2"	3'-7"	3'-2"	4'-11"	4'-3"	3'-9"	7'-4"	6'-4"	5'-8"
220.0	3'-8"	3'-2"	2'-10"	4'-1"	3'-6"	3'-2"	4'-10"	4'-2"	3'-9"	7'-3"	6'-3"	5'-8"
226.3	3'-7"	3'-2"	2'-10"	4'-0"	3'-6"	3'-1"	4'-9"	4'-1"	3'-8"	7'-2"	6'-2"	5'-7"

* STORM BAR SPACING SHALL BE SUCH THAT MAXIMUM SLAT SPAN SHALL NOT BE EXCEEDED.

7/9/98

PRODUCT RENEWED
ACCEPTANCE No. 00-1207.02
EXPIRATION DATE 04/30/2006
By
PRODUCT CONTROL DIVISION
BUILDING CODE COMPLIANCE OFFICE

APPROVED AS COMPLYING WITH THE SOUTH FLORIDA BUILDING CODE
DATE APRIL 30 1998
BY
PRODUCT CONTROL DIVISION
BUILDING CODE COMPLIANCE OFFICE
ACCEPTANCE NO. 97-1202.03

DADE COUNTY

TILTECO INC.
TILLIT TESTING & ENGINEERING COMPANY
6595 N.W. 36th. St., Ste. 217, VIRGINIA GARDENS, Fl 33166
Phone : (305)871-1530 . Fax : (305)871-1531
WALTER A. TILLIT Jr., P. E.
FLORIDA Lic. 44167

63 mm EXTRUDED ROLL-UP SHUTTER

HOMESHIELD INDUSTRIES, INC.
3585 E. 10th. COURT
HIALEAH, FLORIDA 33013

REV. No	DESCRIPTION	DATE	REV. No	DESCRIPTION	DATE
1	–	–	3		
2	–	–	4		

SCALE –
DATE 9/22/97
DRAWING No 97 – 245
SHEET 13 OF 14

SIDE RAIL ANCHOR SCHEDULE

MAXIMUM DESIGN PRESSURE RATING "W" (p. s. f.) AND CORRESPONDING MAXIMUM ANCHOR SPACING (in) SCHEDULE FOR SIDE RAILS Ⓑ , Ⓒ , Ⓓ & Ⓔ CONNECTION TO C. B. S.

(USE NEGATIVE PRESSURE VALUES AS PER ASCE 7-88)

MASONRY
POURED CONCRETE

SUBSTRATE LEGEND

MAXIMUM DESIGN LOAD "W" (p.s.f.)	Ⓑ			Ⓒ			Ⓓ & Ⓔ		
	WALL MOUNT	SIDE WALL MOUNT	BUILD-OUT	WALL MOUNT	SIDE WALL MOUNT	BUILD-OUT	WALL MOUNT	SIDE WALL MOUNT	BUILD-OUT
80.0 OR LESS	6"	6"	6"	6"	6"	6"	6"	6"	6"
	6"	6"	6"	6"	6"	6"	6"	6"	6"
>80.0 TO 150.0	5 1/2"	5 1/2"	6"	4"	6"	6"	–	–	–
	6"	6"	6"	6"	6"	6"	–	–	–
>150.0 TO 226.3	3 1/2"	4"	4 1/2"	2 1/2"	4 1/2"	4 1/2"	–	–	–
	6"	6"	6"	6"	6"	6"	–	–	–

MAXIMUM ANCHOR SPACING (in.) AT SIDE RAILS VERSUS EDGE DISTANCE = E. D.

MAXIMUM SIDE RAILS SPACINGS SHOWN ON THIS SHEET ARE VALID FOR 3 1/2" EDGE DISTANCE. FOR E. D. LESS THAN 3 1/2", REDUCE ANCHOR SPACING BY MULTIPLYING SPACINGS SHOWN ON THAT SHEET BY THE FOLLOWING FACTORS.

ACTUAL E. D.= EDGE DISTANCE	FACTOR
3"	.86
2 1/2"	.71
2"	.50

PRODUCT RENEWED
ACCEPTANCE No. 00-1207.02
EXPIRATION DATE 04/30/2006
By Manuel Sera
PRODUCT CONTROL DIVISION
BUILDING CODE COMPLIANCE OFFICE

APPROVED AS COMPLYING WITH THE SOUTH FLORIDA BUILDING CODE
DATE APRIL 30 1998
BY Manuel Sera
PRODUCT CONTROL DIVISION
BUILDING CODE COMPLIANCE OFFICE
ACCEPTANCE NO. 97-1202.03

DADE COUNTY

4/9/98

TILTECO INC.
TILLIT TESTING & ENGINEERING COMPANY
6595 N.W. 36th St., Ste. 217, VIRGINIA GARDENS, Fl 33166
Phone : (305)871-1530 . Fax : (305)871-1531
WALTER A. TILLIT Jr., P. E.
FLORIDA Lic. 44167

63 mm EXTRUDED ROLL-UP SHUTTER

HOMESHIELD INDUSTRIES, INC.
3585 E. 10th. COURT
HIALEAH, FLORIDA 33013

REV. No	DESCRIPTION	DATE	REV. No	DESCRIPTION	DATE
1	–	–	3		
2	–	–	4		

SCALE –
DATE 9/22/97
DRAWING No 97 – 245
SHEET 14 OF 14