MIAMI-DADE

MIAMI-DADE COUNTY, FLORIDA
METRO-DADE FLAGLER BUILDING

BUILDING CODE COMPLIANCE OFFICE
METRO-DADE FLAGLER BUILDING
140 WEST FLAGLER STREET, SUITE 1603
MIAMI, FLORIDA 33130-1563
(305) 375-2901 FAX (305) 375-2908

CONTRACTOR LICENSING SECTION
(305) 375-2527 FAX (305) 375-2558

CONTRACTOR ENFORCEMENT DIVISION
(305) 375-2966 FAX (305) 375-2908

PRODUCT CONTROL DIVISION
(305) 375-2902 FAX (305) 372-6339

PRODUCT CONTROL NOTICE OF ACCEPTANCE

Santa Fe Tile Corporation
10302 N.W. South River Drive, Bay #16
Medley ,FL 33178

Your application for Notice of Acceptance (NOA) of:
Spanish "S" Clay Tile
under Chapter 8 of the Code of Miami-Dade County governing the use of Alternate Materials and Types of Construction, and completely described herein, has been recommended for acceptance by the Miami-Dade County Building Code Compliance Office (BCCO) under the conditions specified herein.

This NOA shall not be valid after the expiration date stated below. BCCO reserves the right to secure this product or material at any time from a jobsite or manufacturer's plant for quality control testing. If this product or material fails to perform in the approved manner, BCCO may revoke, modify, or suspend the use of such product or material immediately. BCCO reserves the right to revoke this approval, if it is determined by BCCO that this product or material fails to meet the requirements of the South Florida Building Code.

The expense of such testing will be incurred by the manufacturer.

ACCEPTANCE NO.: 00-1212.06
EXPIRES: 02/01/2006

Raul Rodriguez
Chief Product Control Division

THIS IS THE COVERSHEET, SEE ADDITIONAL PAGES FOR SPECIFIC AND GENERAL CONDITIONS
BUILDING CODE & PRODUCT REVIEW COMMITTEE

This application for Product Approval has been reviewed by the BCCO and approved by the Building Code and Product Review Committee to be used in Miami-Dade County, Florida under the conditions set forth above.

Francisco J. Quintana, R.A.
Director
Miami-Dade County
Building Code Compliance Office

APPROVED: 02/01/2001

ROOFING ASSEMBLY APPROVAL

Category: Roofing
Sub-Category: 07320 Roofing Tiles

Approval Date: **February 1, 2001**

Expiration Date: **February 1, 2006**

Materials Clay Roof Tiles
Deck Type: Wood

1. SCOPE

This renews a roofing system using Santa Fe "Santafe 'S" clay roofing tile, manufactured by Santafe Tile Corporation described in Section 2 of this Notice of Acceptance, designed to comply with the South Florida Building Code, 1994 Edition for Miami-Dade County. For locations where the design pressure requirements, as determined by applicable building code, does not exceed the design pressure values obtain by calculations in compliance with RAS 127 using the values listed in herein. The attachment calculations shall be done as a moment based system.

2. PRODUCT DESCRIPTION

Manufactured by Applicant	Dimensions	Test Specifications	Product Description
Santafé 'S' Clay Roof Tile	l = 18" w = 11.5" ½" thick	PA 112	One piece high profile clay roof tile equipped with two nail holes. For nail-on, mortar set and adhesive set applications.
Trim Pieces	l = varies w = varies varying thickness	PA 112	Accessory trim, clay roof pieces for use at hips, rakes, ridges and valley terminations. Manufactured for each tile profile.

2.1 COMPONENTS OR PRODUCTS MANUFACTURED BY OTHERS

Product	Dimensions	Test Specifications	Product Description	Manufacturer
Tile Screws	#8 x 2-½" long 0.130" shank dia. 0.178 flute dia.	PA 114 Appendix E	Stainless Steel	generic

3. LIMITATIONS

3.1 Fire classification is not part of this acceptance.

3.2 For mortar or adhesive set tile applications, a static field uplift test shall be performed in accordance with RAS 106.

3.3 Applicant shall retain the services of a Miami-Dade County Certified Laboratory to perform quarterly test in accordance with PA 112, appendix 'A'. Such testing shall be submitted to the Building Code Compliance Office for review.

Frank Zuloaga, RRC
Roofing Product Control Examiner

3.5 30/90 hot mopped underlayment applications may be installed perpendicular to the roof slope unless stated otherwise by the underlayment material manufacturers published literature.

3.6 This acceptance is for wood deck applications. Minimum deck requirements shall be in compliance with applicable building code.

4. INSTALLATION

4.1.1 Santafe 'S' and its components shall be installed in strict compliance with Miami Dade County Roofing Application Standard RAS 118, RAS 119, and RAS 120.

4.1.2 Data For Attachment Calculations

Table 1: Aerodynamic Multiplyers– $\lambda(ft^3)$

Tile Profile	λ (ft^3) Batten Application	λ (ft^3) Direct Deck
Santafe 'S'	0.274	0.297

Table 2: Restoring Moments due to Gravity - M_g (ft-lbf)

Tile Profile	2":12"		3":12"		4":12"		5":12"		6":12"		7":12" or greater	
	Battens	Direct Deck	Battens	Direct Deck	Battens	Direct Deck	Battens	Direct Deck	Battens	Direct Deck	Battens	Direct Deck
Santafe 'S'	5.93	5.90	5.85	5.82	5.73	5.69	5.56	5.53	5.32	5.29	5.03	N/A

Table 3: Attachment Resistance Expressed as a Moment- Mf (ft-lbf) For Nail-On System

Tile Profile	Tile Application	Two Nails	One Screw	Two Screws	One Screw w/ Clip	Two Screws w/ Clip
Santafe S	Direct Deck	21.8	29.16[1]	38.28[1]	57.31[1]	57.60[1]
	Battens					61.77[1]

1. Approved screws as noted 'Product manufactured by others'.

Table 4: Attachment Resistance Expressed as a Moment - M_f (ft-lbf) for Mortar or Adhesive Set Systems

Tile Profile	Tile Application	Attachment Resistance
Santafe 'S'	Mortar Set	23.6
	Adhesive Set	61.9

Frank Zuloaga, RRC
Roofing Product Control Examiner

5. LABELING

5.1 All tiles shall bear the imprint or identifiable marking of the manufacturer's name or logo, or following statement: "Miami-Dade County Product Control Approved".

6. BUILDING PERMIT REQUIREMENTS

6.1 Application for building permit shall be accompanied by copies of the following:

6.1.1 This Notice of Acceptance.

6.1.2 Any other documents required by the Building Official or applicable Building Code in order to properly evaluate the installation of this system.

PROFILE DRAWING

SANTAFÉ "SANTAFE S" CLAY ROOF TILE

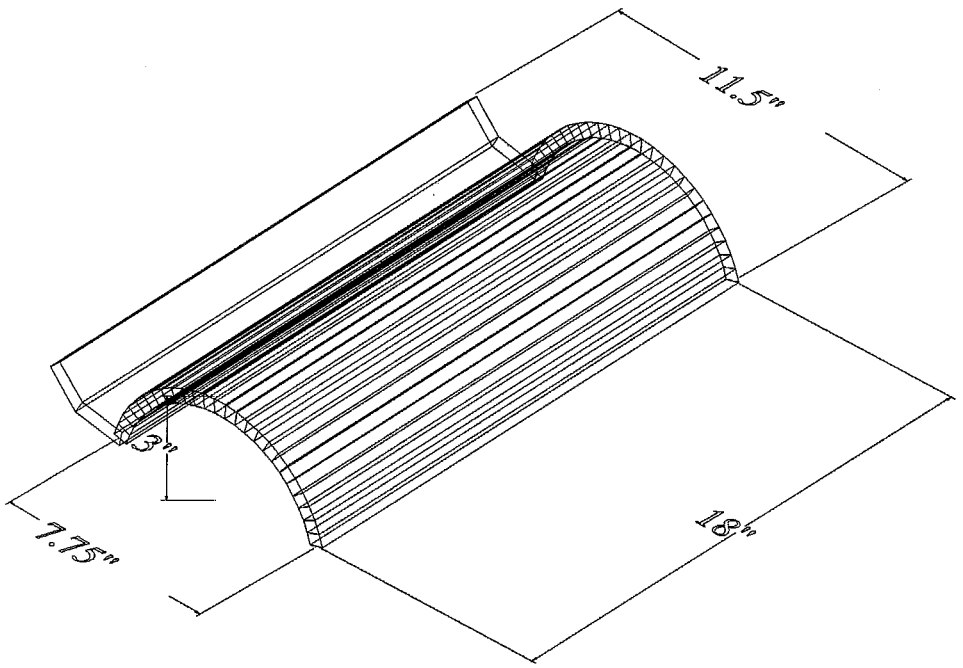

Frank Zuloaga, RRC
Roofing Product Control Examiner

NOTICE OF ACCEPTANCE STANDARD CONDITIONS

1 Renewal of this Acceptance (approval) shall be considered after a renewal application has been filed and the original submitted documentation, including test supporting data, engineering documents, are no older than eight (8) years.

2 Any and all approved products shall be permanently labeled with the manufacturer's name, city, state, and the following statement: "Miami-Dade County Product Control Approved", or as specifically stated in the specific conditions of this Acceptance.

3 Renewals of Acceptance will not be considered if:
- a) There has been a change in the South Florida Building Code affecting the evaluation of this product and the product is not in compliance with the code changes;
- b) The product is no longer the same product (identical) as the one originally approved;
- c) If the Acceptance holder has not complied with all the requirements of this acceptance, including the correct installation of the product;
- d) The engineer who originally prepared, signed and sealed the required documentation initially submitted, is no longer practicing the engineering profession.

4 Any revision or change in the materials, use, and/or manufacture of the product or process shall automatically be cause for termination of this Acceptance, unless prior written approval has been requested (through the filing of a revision application with appropriate fee) and granted by this office.

5 Any of the following shall also be grounds for removal of this Acceptance:
- a) Unsatisfactory performance of this product or process;
- b) Misuse of this Acceptance as an endorsement of any product, for sales, advertising or any other purposes.

6 The Notice of Acceptance number preceded by the words Miami-Dade County, Florida, and followed by the expiration date may be displayed in advertising literature. If any portion of the Notice of Acceptance is displayed, then it shall be done in its entirety.

7 A copy of this Acceptance as well as approved drawings and other documents, where it applies, shall be provided to the user by the manufacturer or its distributors and shall be available for inspection at the job site at all times. The copies need not be resealed by the engineer.

8 Failure to comply with any section of this Acceptance shall be cause for termination and removal of Acceptance.

9 This Acceptance contains pages 1 through 5

END OF THIS ACCEPTANCE

Frank Zuloaga, RRC
Roofing Product Control Examiner