MIAMI-DADE COUNTY, FLORIDA
METRO-DADE FLAGLER BUILDING

BUILDING CODE COMPLIANCE OFFICE
METRO-DADE FLAGLER BUILDING
140 WEST FLAGLER STREET, SUITE 1603
MIAMI, FLORIDA 33130-1563
(305) 375-2901 FAX (305) 375-2908

CONTRACTOR LICENSING SECTION
(305) 375-2527 FAX (305) 375-2558

CONTRACTOR ENFORCEMENT DIVISION
(305) 375-2966 FAX (305) 375-2908

PRODUCT CONTROL DIVISION
(305) 375-2902 FAX (305) 372-6339

PRODUCT CONTROL NOTICE OF ACCEPTANCE

PGT Industries
1070 Technology Drive
Nokomis ,FL 34275

Your application for Notice of Acceptance (NOA) of:
Series F-6000 Aluminum Fixed Window
under Chapter 8 of the Code of Miami-Dade County governing the use of Alternate Materials and Types of Construction, and completely described herein, has been recommended for acceptance by the Miami-Dade County Building Code Compliance Office (BCCO) under the conditions specified herein.

This NOA shall not be valid after the expiration date stated below. BCCO reserves the right to secure this product or material at any time from a jobsite or manufacturer's plant for quality control testing. If this product or material fails to perform in the approved manner, BCCO may revoke, modify, or suspend the use of such product or material immediately. BCCO reserves the right to revoke this approval, if it is determined by BCCO that this product or material fails to meet the requirements of the South Florida Building Code.

The expense of such testing will be incurred by the manufacturer.

ACCEPTANCE NO.: 01-0102.03
EXPIRES: 09/13/2006

Raul Rodriguez
Chief Product Control Division

THIS IS THE COVERSHEET, SEE ADDITIONAL PAGES FOR SPECIFIC AND GENERAL CONDITIONS
BUILDING CODE & PRODUCT REVIEW COMMITTEE

This application for Product Approval has been reviewed by the BCCO and approved by the Building Code and Product Review Committee to be used in Miami-Dade County, Florida under the conditions set forth above.

Francisco J. Quintana, R.A.
Director
Miami-Dade County
Building Code Compliance Office

APPROVED: 09/13/2001

PGT Industries

ACCEPTANCE No.: 01-0102.03

APPROVED: SEP 13 2001

EXPIRES: SEP 13 2006

NOTICE OF ACCEPTANCE: SPECIFIC CONDITIONS

1. SCOPE

1.1 This approves an aluminum fixed window, as described in Section 2 of this Notice of Acceptance, designed to comply with the South Florida Building Code (SFBC), 1994 Edition for Miami-Dade County, for the locations where the pressure requirements, as determined by SFBC Chapter 23, do not exceed the Design Pressure Rating values indicated in the approved drawings.

2. PRODUCT DESCRIPTION

2.1 The **Series F-6000 Aluminum Fixed Window** and its components shall be constructed in strict compliance with the following documents: Drawing No **550**, Sheets 1 through 9 of 9, titled "F-6000 Aluminum Fixed Window," dated 10/24/00 and revised on 8/15/01, prepared by manufacturer, signed and sealed by Robert L. Clark, P.E., bearing the Miami-Dade County Product Control approval stamp with the Notice of Acceptance number and approval date by the Miami-Dade County Product Control Division. These documents shall hereinafter be referred to as the approved drawings.

3. LIMITATIONS

3.1 This approval applies to single unit applications only, as shown in approved drawings.

3.2 For Design Pressure Rating vs. Window Size, see Comparative Analysis Table for tempered glass in Sheet 8 of 9, and for annealed glass in Sheet 9 of 9 of approved drawings.

4. INSTALLATION

4.1 The aluminum fixed window and its components shall be installed in strict compliance with the approved drawings.

4.2 Hurricane protection system (shutters): to determine whether the installation requires a hurricane protection system or not, see corresponding table in approved drawing.

5. LABELING

5.1 Each unit shall bear a permanent label with the manufacturer's name or logo, city, state and following statement: "Miami-Dade County Product Control Approved".

6. BUILDING PERMIT REQUIREMENTS

6.1 Application for building permit shall be accompanied by copies of the following:

- **6.1.1** This Notice of Acceptance
- **6.1.2** Duplicate copies of the approved drawings, as identified in Section 2 of this Notice of Acceptance, clearly marked to show the components selected for the proposed installation.
- **6.1.3** Any other documents required by the Building Official or the South Florida Building Code (SFBC) in order to properly evaluate the installation of this system.

Manuel Perez

Manuel Perez, P.E. Product Control Examiner
Product Control Division

PGT Industries

ACCEPTANCE No.: 01-0102.03

APPROVED: SEP 13 2001

EXPIRES: SEP 13 2006

NOTICE OF ACCEPTANCE: STANDARD CONDITIONS

1. Renewal of this Acceptance (approval) shall be considered after a renewal application has been filed and the original submitted documentation, including test supporting data, engineering documents, are no older than eight (8) years.

2. Any and all approved products shall be permanently labeled with the manufacturer's name, city, state, and the following statement: "Miami-Dade County Product Control Approved", or as specifically stated in the specific conditions of this Acceptance.

3. Renewals of Acceptance will not be considered if:
   - **a.** There has been a change in the South Florida Building Code affecting the evaluation of this product and the product is not in compliance with the code changes;
   - **b.** The product is no longer the same product (identical) as the one originally approved.
   - **c.** If the Acceptance holder has not complied with all the requirements of this acceptance, including the correct installation of the product;
   - **d.** The engineer, who originally prepared, signed and sealed the required documentation initially submitted, is no longer practicing the engineering profession.

4. Any revision or change in the materials, use, and/or manufacture of the product or process shall automatically be cause for termination of this Acceptance, unless prior written approval has been requested (through the filing of a revision application with appropriate fee) and granted by this office.

5. Any of the following shall also be grounds for removal of this Acceptance:
   - **a.** Unsatisfactory performance of this product or process;
   - **b.** Misuse of this Acceptance as an endorsement of any product, for sales, advertising or any other purpose.

6. The Notice of Acceptance number preceded by the words Dade County, Florida, and followed by the expiration date may be displayed in advertising literature. If any portion of the Notice of Acceptance is displayed, then it shall be done in its entirety.

7. A copy of this Acceptance as well as approved drawings and other documents, where it applies, shall be provided to the user by the manufacturer or its distributors and shall be available for inspection at the job site at all times. The engineer does not need to reseal the copies.

8. Failure to comply with any section of this Acceptance shall be cause for termination and removal of Acceptance.

9. This Acceptance contains pages 1, 2, and this last page 3.

END OF THIS ACCEPTANCE

Manuel Perez

Manuel Perez, P. E., Product Control Examiner
Product Control Division

PGT Industries

ACCEPTANCE No.: **01-0102.03**

APPROVED: SEP 1 3 2001

EXPIRES: SEP 1 3 2006

NOTICE OF ACCEPTANCE: EVIDENCE SUBMITTED
(For File ONLY. Not part of NOA.)

A. DRAWINGS

1. Manufacturer's die drawings and sections.
2. Drawing No **550**, Sheets 1 through 9 of 9, titled "F-6000 Aluminum Fixed Window," dated 10/24/00 and revised on 8/15/01, prepared by manufacturer, signed and sealed by Robert L. Clark, P.E.

B. TESTS

1. Test reports on 1) Air Infiltration Test, per PA 202-94
   2) Uniform Static Air Pressure Test, Loading per PA 202-94
   3) Water Resistance Test, per PA 202-94
   along with marked-up drawings and installation diagram of an O configuration 120" wide by 60" high series F-6000 aluminum fixed circle top window glazed with 3/16" tempered glass, prepared by Fenestration Testing Laboratory, Inc., Test Report No. **FTL-2818,** dated 9/27/00, signed and sealed by Jose Acevedo, P.E.
2. Test reports on 1) Air Infiltration Test, per PA 202-94
   2) Uniform Static Air Pressure Test, Loading per PA 202-94
   3) Water Resistance Test, per PA 202-94
   along with marked-up drawings and installation diagram of an O configuration 120" wide by 60" high series F-6000 aluminum fixed window glazed with 3/16" tempered glass, prepared by Fenestration Testing Laboratory, Inc., Test Report No. **FTL-2819,** dated 9/26/00, signed and sealed by Jose Acevedo, P.E.
3. Test reports on 1) Air Infiltration Test, per PA 202-94
   2) Uniform Static Air Pressure Test, Loading per PA 202-94
   3) Water Resistance Test, per PA 202-94
   along with marked-up drawings and installation diagram of and O configuration 60" wide by 120" high series F-6000 aluminum fixed arch window glazed with 3/16" tempered glass, prepared by Fenestration Testing Laboratory, Inc., Test Report No. **FTL-2820,** dated 9/26/00, signed and sealed by Jose Acevedo, P.E.
4. Test reports on 1) Air Infiltration Test, per PA 202-94
   2) Uniform Static Air Pressure Test, Loading per PA 202-94
   3) Water Resistance Test, per PA 202-94
   along with marked-up drawings and installation diagram of and O configuration 37" wide by 74" high series F-6000 aluminum fixed arch window glazed with 3/16" annealed glass, prepared by Fenestration Testing Laboratory, Inc., Test Report No. **FTL-2756,** dated 8/14/00, signed and sealed by Aldo Pablo Gonzalez, P.E.

Manuel Perez, P.E. Product Control Examiner
Product Control Division

5. Test reports on 1) Air Infiltration Test, per PA 202-94
   2) Uniform Static Air Pressure Test, Loading per PA 202-94
   3) Water Resistance Test, per PA 202-94
   along with marked-up drawings and installation diagram of and O configuration 74" wide by 37" high series F-6000 aluminum eyebrow fixed window glazed with 3/16" annealed glass, prepared by Fenestration Testing Laboratory, Inc., Test Report No. **FTL-2758,** dated 8/14/00, signed and sealed by Aldo Pablo Gonzalez, P.E.
6. Test reports on 1) Air Infiltration Test, per PA 202-94
   2) Uniform Static Air Pressure Test, Loading per PA 202-94
   3) Water Resistance Test, per PA 202-94
   along with marked-up drawings and installation diagram of and O configuration 74" wide by 37" high series F-6000 aluminum circle top fixed window glazed with 3/16" annealed glass, prepared by Fenestration Testing Laboratory, Inc., Test Report No. **FTL-2748,** dated 9/11/00, signed and sealed by Aldo Pablo Gonzalez, P.E.

C. CALCULATIONS

1. Comparative Analysis and Anchor Calculations, prepared by PGT Industries, dated 12/28/00, revised on 8/20/01, signed and sealed by Robert L. Clark, P.E.

D. MATERIAL CERTIFICATIONS

1. None

E. STATEMENTS

1. Statement letter of no financial interest, dated December 11, 2000 signed and sealed by Robert L. Clark, P.E.
2. Statement letter of Code Compliance issued by PGT Industries on December 11, 2000 signed and sealed by Robert L. Clark, P.E.
3. Laboratory compliance letter for Test Reports No. FTL-2818, FTL-2819 & FTL-2820, issued by Fenestration Testing Laboratory, Inc., dated September 29, 2000, signed and sealed by Antonio Acevedo, P.E.
4. Laboratory compliance letter for Test Reports No. FTL-2748, FTL-2756 & FTL-2758, issued by Fenestration Testing Laboratory, Inc., dated September 28, 2000, signed and sealed by Aldo P. Gonzalez, P.E.

F. OTHER

1. None

Manuel Perez

Manuel Perez, P.E. Product Control Examiner
Product Control Division

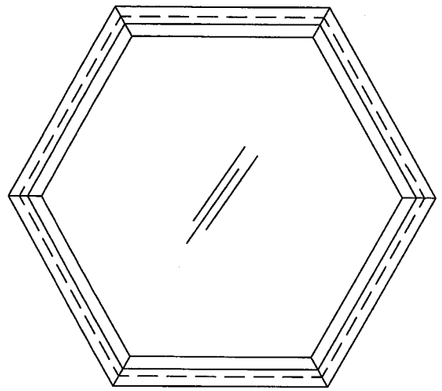

HEXAGON

60" BETWEEN FLATS
Maximum Area 21.65 sq. ft.

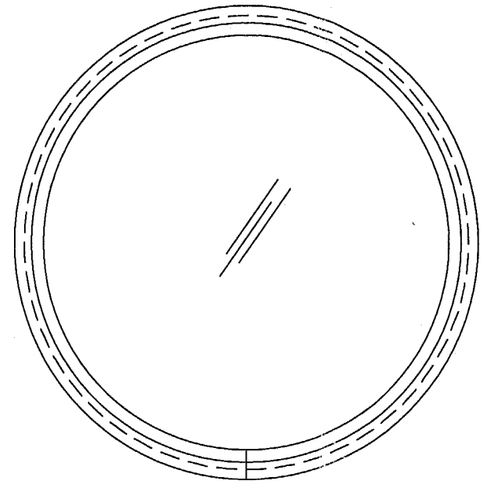

FULL CIRCLE

ø60"
Maximum Area 19.64 sq. ft.

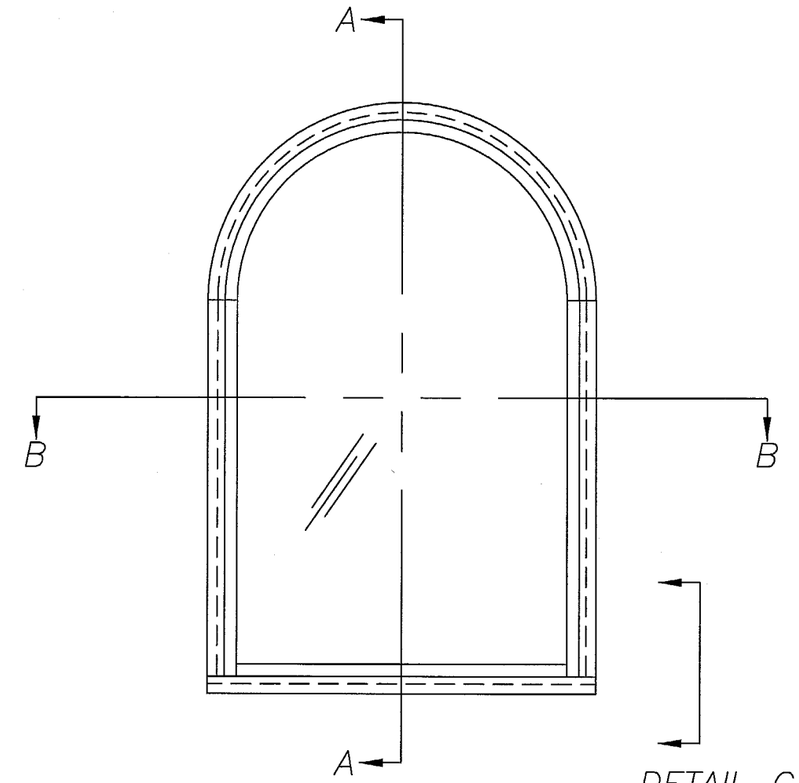

DETAIL C
SEE SHT. 7

ARCH.

60" x 120"
Maximum Area 47.32 sq. ft.

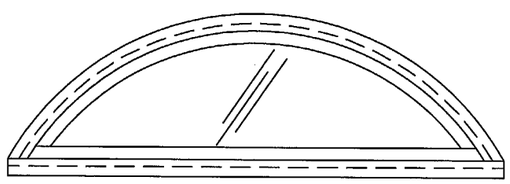

FAN

120" x 55"
Maximum Area 35.20 sq. ft.

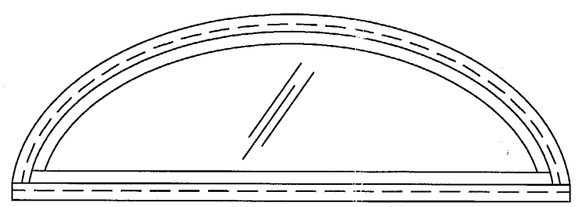

ELLIPTICAL

120" x 48"
Maximum Area 31.46 sq. ft.

NON–IMPACT WINDOWS

1.) GLAZING: 3/16" TEMPERED
2.) CONFIGURATIONS: O
3.) FOR DESIGN PRESSURE RATING SEE COMPARATIVE ANALYSIS ON SHEET 8 OF 8
4.) ANCHOR MAXIMIM SPACING: 15.000"
5.) SHUTTERS REQUIRED AT ALL INSTALLATIONS
6.) ALL FRAME JOINTS TO BE SEAM WELDED
7.) REFERENCE TEST REPORTS: FTL–2818, 2819 & 2820

APPROVED AS COMPLYING WITH THE
SOUTH FLORIDA BUILDING CODE
DATE SEP 13 2001
BY Manuel Perez
PRODUCT CONTROL DIVISION
BUILDING CODE COMPLIANCE OFFICE
ACCEPTANCE NO. 01-0102.03

8/20/01
Robert L. Clark, P.E.
PE #39712
Structural

PGT INDUSTRIES

	Revsd By: F.K.	Date: 8/15/01	Revisions: REDRAWN
Drawn By: J.J.	Date: 10/24/00		
Description: ELEVATIONS, 3/16 TEMPERED GLASS			
Title: ALUMINUM FIXED WINDOW			

1070 TECHNOLOGY DRIVE NOKOMIS, FL 34275	P.O. BOX 1529 NOKOMIS, FL 34274	Series/Model: F–6000	Scale: NTS	Sheet: 1 of 9	Drawing No. 550	Rev: B

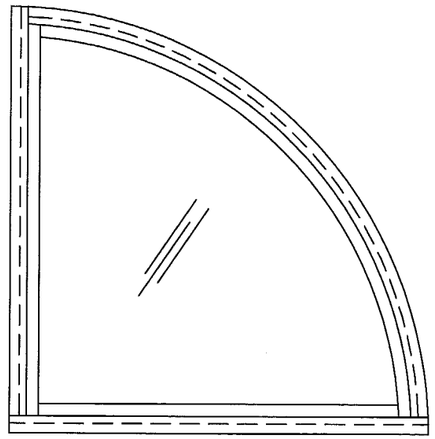

QUARTER CIRCLE

68" x 68"

Maximum Area 25.22 sq. ft.

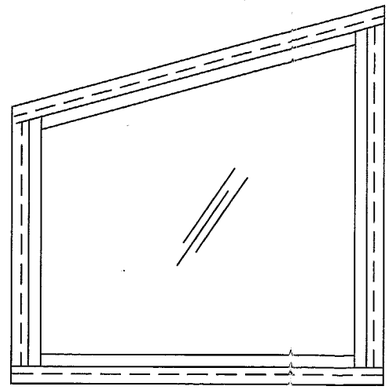

TRAPEZOID

60" x 120"

Maximum Area 43.75 sq. ft.

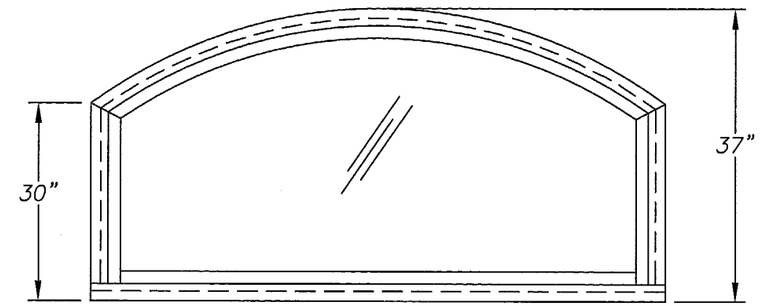

EYEBROW

74" x 37"

Maximum Area 17.83 sq. ft.

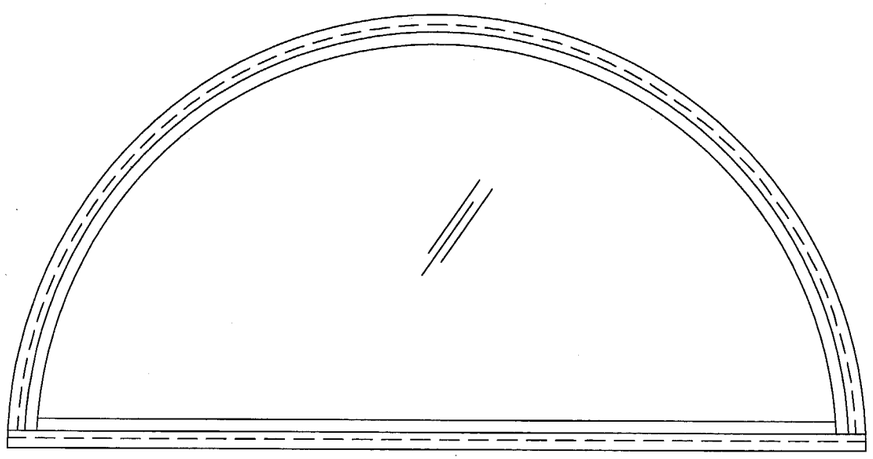

HALF CIRCLE

120" x 60"

Maximum Area 39.27 sq. ft.

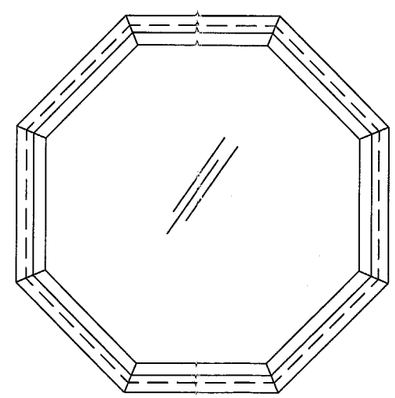

OCTAGON

60" x 60"

Maximum Area 20.71 sq. ft.

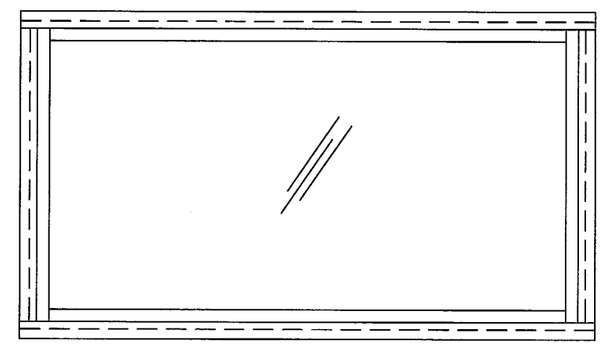

RECTANGLE

60" x 120"

Maximum Area 50.00 sq. ft.

APPROVED AS COMPLYING WITH THE SOUTH FLORIDA BUILDING CODE
DATE SEP 13 2001
BY Manuel Perez
PRODUCT CONTROL DIVISION
BUILDING CODE COMPLIANCE OFFICE
ACCEPTANCE NO. 01-0102.03

NON-IMPACT WINDOWS CONT.

3/16" TEMPERED GLASS

REFERENCE TEST REPORTS: FTL-2818, 2819 & 2820

8/28/01

Robert L. Clark, P.E.
PE #39712
Structural

PGT INDUSTRIES

	Revsd By: F.K.	Date: 8/15/01	Revisions: REDRAWN
Drawn By: J.J.	Date: 10/24/00		
Description: ELEVATIONS, 3/16 TEMPERED GLASS			
Title: ALUMINUM FIXED WINDOW			

1070 TECHNOLOGY DRIVE NOKOMIS, FL 34275	P.O. BOX 1529 NOKOMIS, FL 34274	Series/Model: F-6000	Scale: NTS	Sheet: 2 of 9	Drawing No. 550	Rev: B

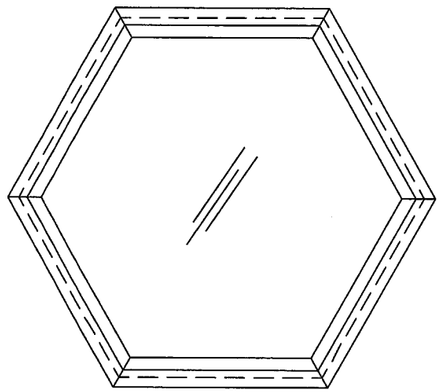

HEXAGON

48" BETWEEN FLATS
Maximum Area 13.86 sq. ft.

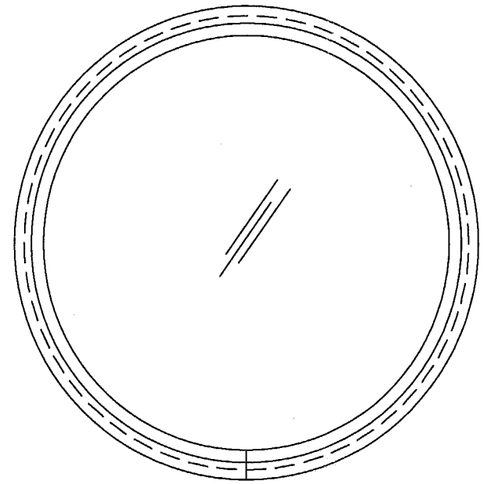

FULL CIRCLE

ø48"
Maximum Area 12.57 sq. ft.

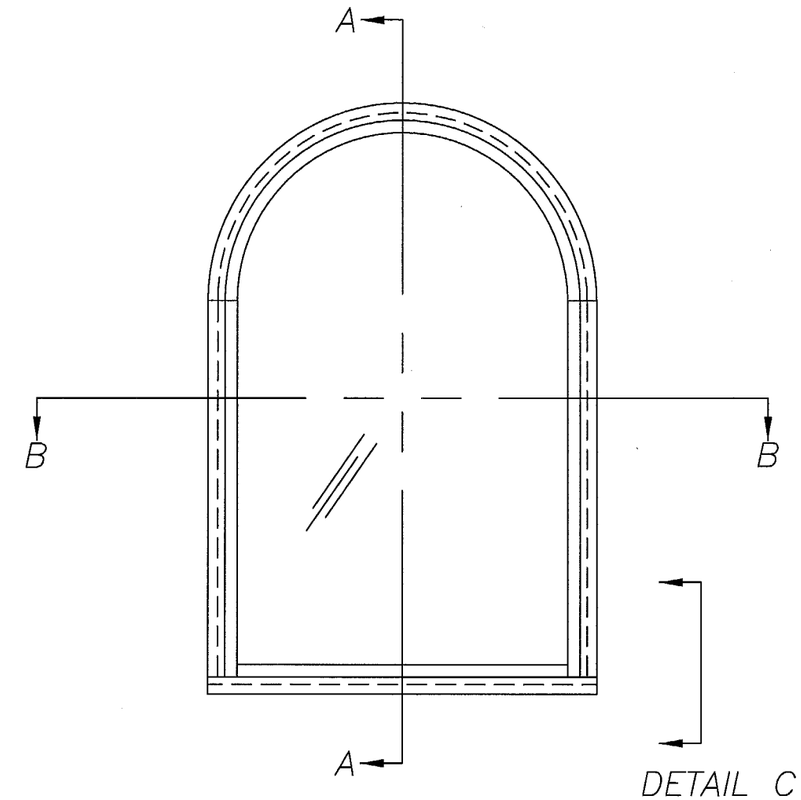

DETAIL C
SEE SHT. 7

ARCH.

37" x 74"
Maximum Area 17.99 sq. ft.

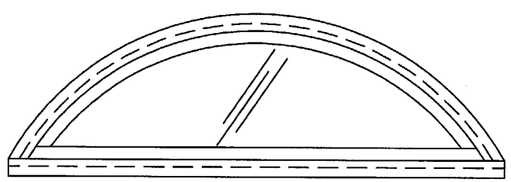

FAN

74" x 36"
Maximum Area 14.42 sq. ft.

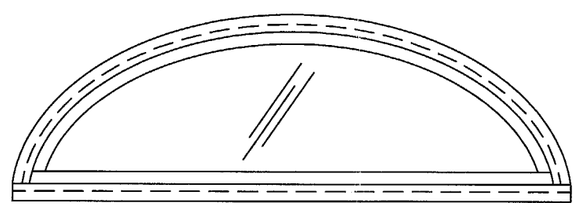

ELLIPTICAL

74" x 36"
Maximum Area 14.53 sq. ft.

NON–IMPACT WINDOWS

1.) GLAZING: 3/16" ANNEALED
2.) CONFIGURATIONS: O
3.) FOR DESIGN PRESSURE RATING SEE COMPARATIVE ANALYSIS ON SHEET 8 OF 8
4.) ANCHOR MAXIMIM SPACING: 15.000"
5.) SHUTTERS REQUIRED AT ALL INSTALLATIONS
6.) ALL FRAME JOINTS TO BE SEAM WELDED
7.) REFERENCE TEST REPORTS: FTL–2748, 2756 & 2758

APPROVED AS COMPLYING WITH THE
SOUTH FLORIDA BUILDING CODE
DATE SEP 13 2001
BY Manuel Chres
PRODUCT CONTROL DIVISION
BUILDING CODE COMPLIANCE OFFICE
ACCEPTANCE NO 01-0102.03

8/20/01
Robert L. Clark, P.E.
PE #39712
Structural

PGT INDUSTRIES

	Revsd By: F.K.	Date: 8/15/01	Revisions: REDRAWN
Drawn By: J.J.	Date: 10/24/00		
Description: ELEVATIONS, 3/16 ANNEALED GLASS			
Title: ALUMINUM FIXED WINDOW			

1070 TECHNOLOGY DRIVE NOKOMIS, FL 34275	P.O. BOX 1529 NOKOMIS, FL 34274	Series/Model: F–6000	Scale: NTS	Sheet: 3 of 9	Drawing No. 550	Rev: B

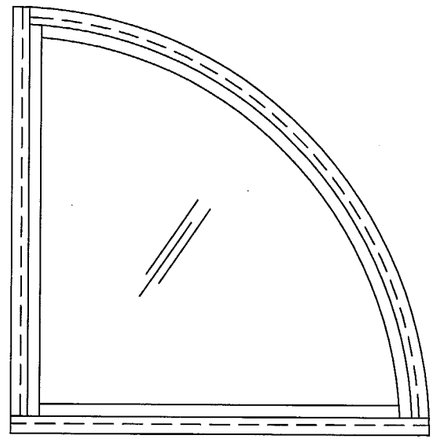

QUARTER CIRCLE

58" x 58"

Maximum Area 18.35 sq. ft.

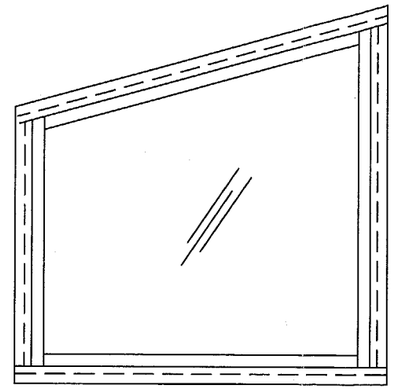

TRAPEZOID

37" x 74"

Maximum Area 14.26 sq. ft.

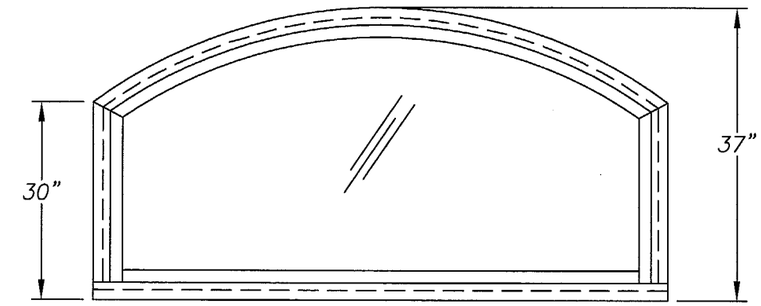

EYEBROW

74" x 37"

Maximum Area 17.83 sq. ft.

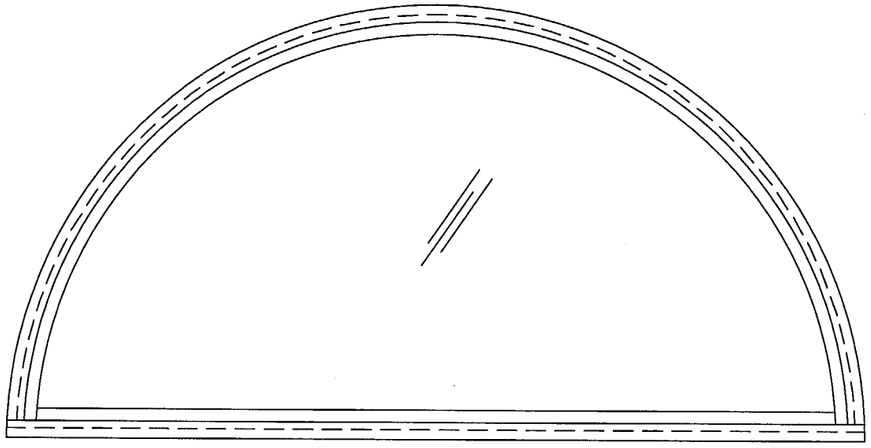

HALF CIRCLE

74" x 37"

Maximum Area 14.93 sq. ft.

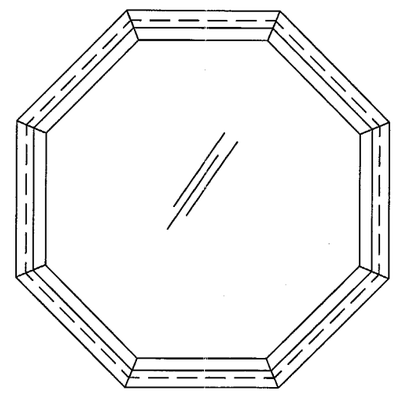

OCTAGON

48" x 48"

Maximum Area 13.26 sq. ft.

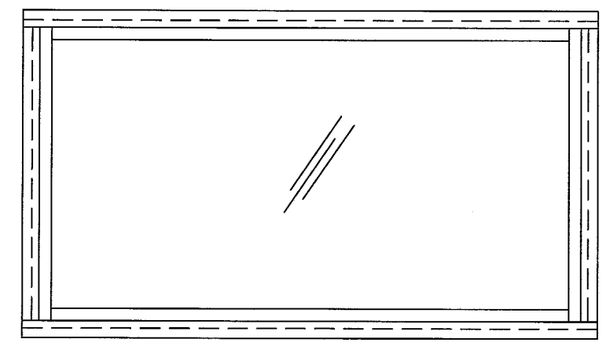

RECTANGLE

74" x 37"

Maximum Area 19.01 sq. ft.

APPROVED AS COMPLYING WITH THE SOUTH FLORIDA BUILDING CODE
DATE SEP 13 2001
BY Manuel Perez
PRODUCT CONTROL DIVISION
BUILDING CODE COMPLIANCE OFFICE
ACCEPTANCE NO. 01-0102.03

NON-IMPACT WINDOWS CONT.

3/16" ANNEALED GLASS

REFERENCE TEST REPORTS: FTL-2748, 2756 & 2758

8/28/01

Robert L. Clark, P.E.
PE #39712
Structural

PGT INDUSTRIES

	Revsd By: F.K.	Date: 8/15/01	Revisions: REDRAWN
Drawn By: J.J.	Date: 10/24/00		
Description: ELEVATIONS, 3/16 ANNEALED GLASS			
Title: ALUMINUM FIXED WINDOW			

1070 TECHNOLOGY DRIVE NOKOMIS, FL 34275	P.O. BOX 1529 NOKOMIS, FL 34274	Series/Model: F-6000	Scale: NTS	Sheet: 4 of 9	Drawing No. 550	Rev: B

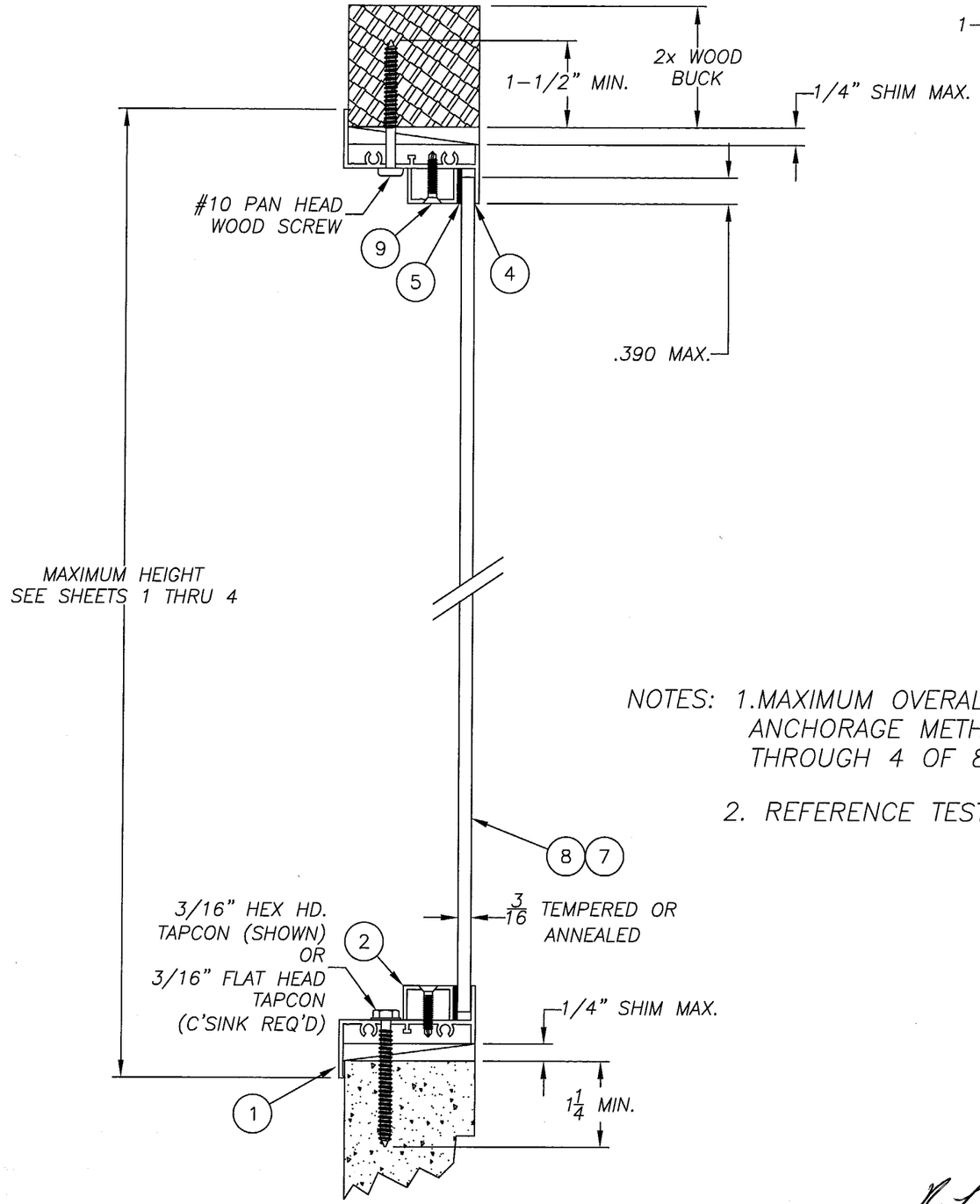

SECTION A–A
TYPICAL SECTION
& INSTALLATION INTO CONCRETE AT SILL & WOOD AT HEAD

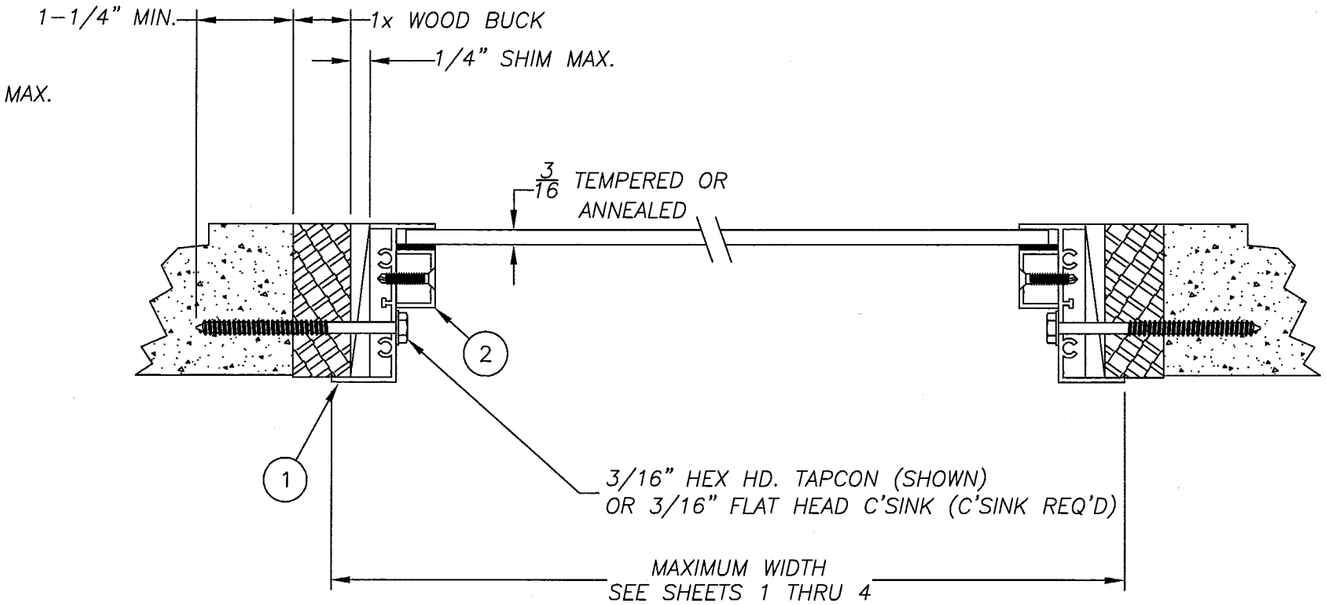

SECTION B–B
TYPICAL SECTION
& ALTERNATE INSTALLATION INTO CONCRETE

NOTES: 1. MAXIMUM OVERALL DIMENSIONS ARE APPLICABLE TO SECTIONED ARCH. SHAPES. ANCHORAGE METHODS ARE APPLICABLE TO ALL SHAPES SHOWN ON SHEETS 1 THROUGH 4 OF 8.

2. REFERENCE TEST REPORTS: FTL–2818, FTL–2819, FTL–2820, FTL–2748, FTL–2756 & FTL–2758

APPROVED AS COMPLYING WITH THE SOUTH FLORIDA BUILDING CODE
DATE SEP 13 2001
BY Manuel Perez
PRODUCT CONTROL DIVISION
BUILDING CODE COMPLIANCE OFFICE
ACCEPTANCE NO. AL-0102-03

8/20/01
Robert L. Clark, P.E.
PE #39712
Structural

PGT INDUSTRIES

	Revsd By: F.K.	Date: 8/15/01	Revisions: REDRAWN
Drawn By: J.J.	Date: 10/24/00		
Description: SECTIONAL & ANCHORAGE VIEWS			
Title: ALUMINUM FIXED WINDOW			

1070 TECHNOLOGY DRIVE NOKOMIS, FL 34275	P.O. BOX 1529 NOKOMIS, FL 34274	Series/Model: F–6000	Scale: NTS	Sheet: 5 of 9	Drawing No. 550	Rev: B

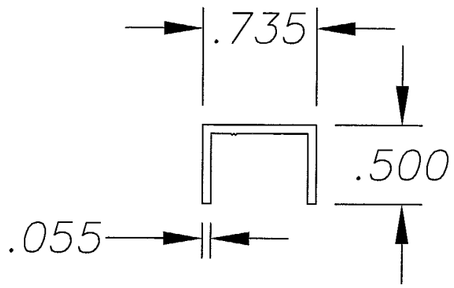

(2) F-6000 U-CHANNEL GLAZING BEAD

BILL OF MATERIAL

MK.	PART #	DESCRIPTION	VENDOR	VENDOR #
1	68342	FRAME HEAD, SILL & JAMB	ALUMAX OR =	AF-8342
2	61168	U-CHANNEL GLAZING BEAD	ALUMAX OR =	AF-1168
3	7834	#8 x 3/4 PN. PH. SMS	SPENCER OR =	
4	62899C/62501C	SILICON BACK BEDDING	DOW/G.E. OR =	
5	61308K	CLOSED CELL FOAM TAPE	TAPE SPECIALISTS OF FL OR =	
6	6SM55W	SEAM SEALER	SCHNEE/MOREHEAD OR =	SM5504
7		3/16 ANNEALED GLASS	TRIPLE DIAMOND GLASS OR =	
8		3/16 TEMPERED GLASS	TRIPLE DIAMOND GLASS OR =	
9	7PWSW	#6 x 7/8 FL. PH. TEK	SPENCER OR =	

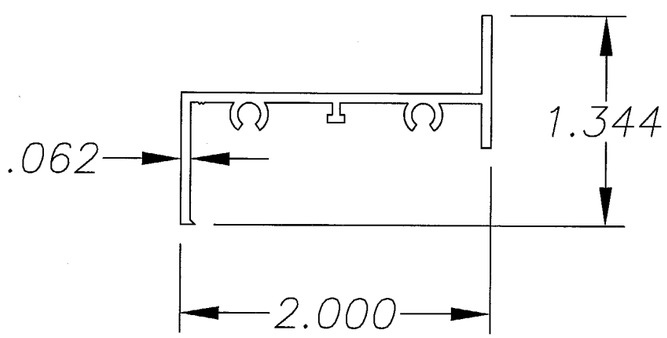

(1) F-6000 FRAME EXTRUSION

VISIBLE LIGHT CALCULATION

WINDOW WIDTH "TIP TO TIP" – 2.688"
WINDOW HEIGHT "TIP TO TIP" – 2.688"

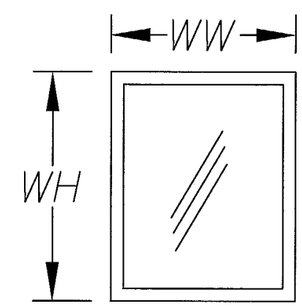

APPROVED AS COMPLYING WITH THE SOUTH FLORIDA BUILDING CODE
DATE SEP 13 2001
BY Manuel Seoane
PRODUCT CONTROL DIVISION
BUILDING CODE COMPLIANCE OFFICE
ACCEPTANCE NO 01-0102.03

8/20/01
Robert L. Clark, P.E.
PE #39712
Structural

PGT INDUSTRIES

	Revsd By:	Date:	Revisions:
	F.K.	8/15/01	REDRAWN
Drawn By: J.J.	Date: 10/24/00		

Description: EXTRUSION PROFILES & B.O.M.

Title: ALUMINUM FIXED WINDOW

1070 TECHNOLOGY DRIVE NOKOMIS, FL 34275	P.O. BOX 1529 NOKOMIS, FL 34274	Series/Model: F-6000	Scale: NTS	Sheet: 6 of 9	Drawing No. 550	Rev: B

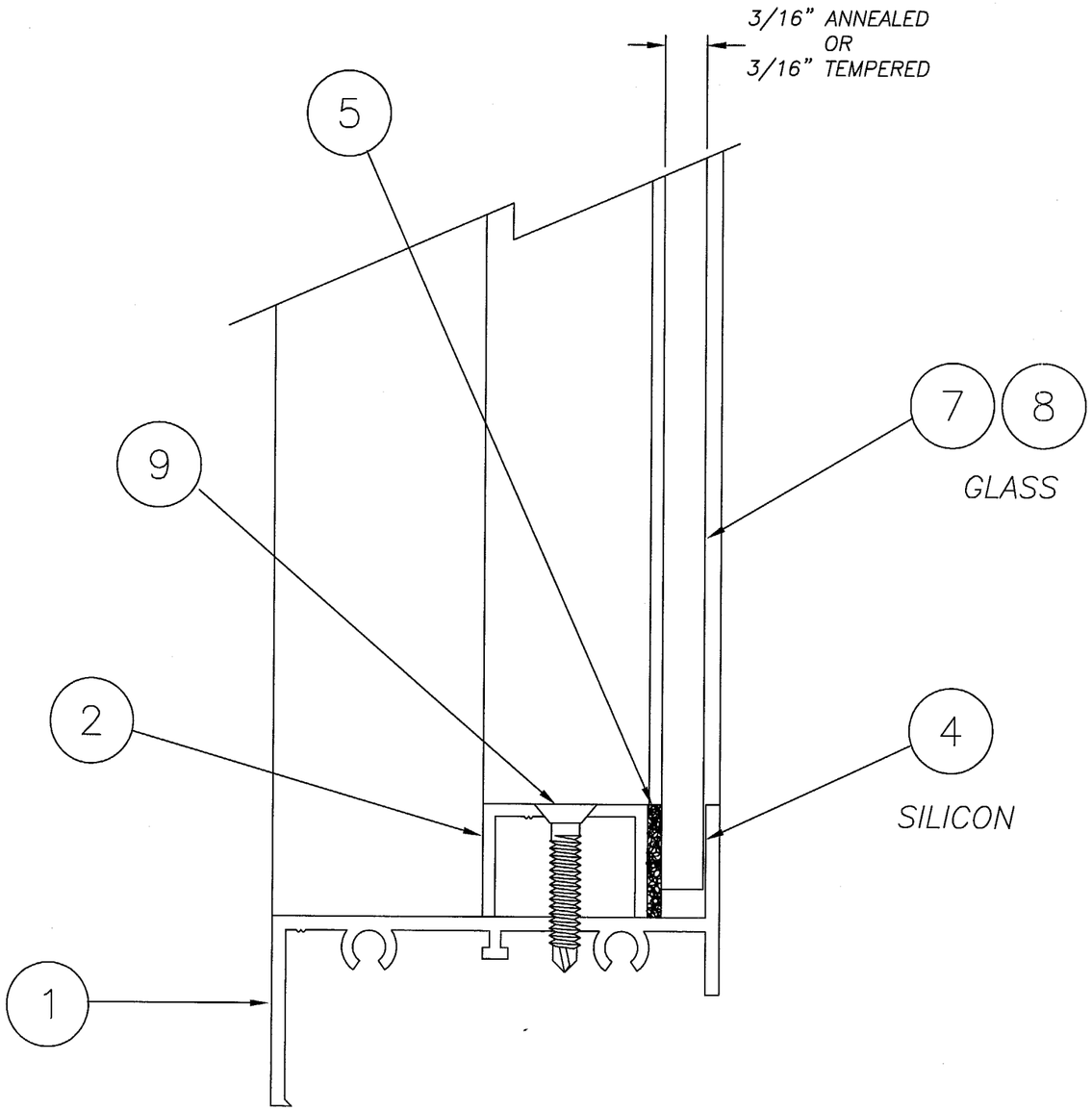

TYPICAL GLAZING DETAIL

3/16" GLASS

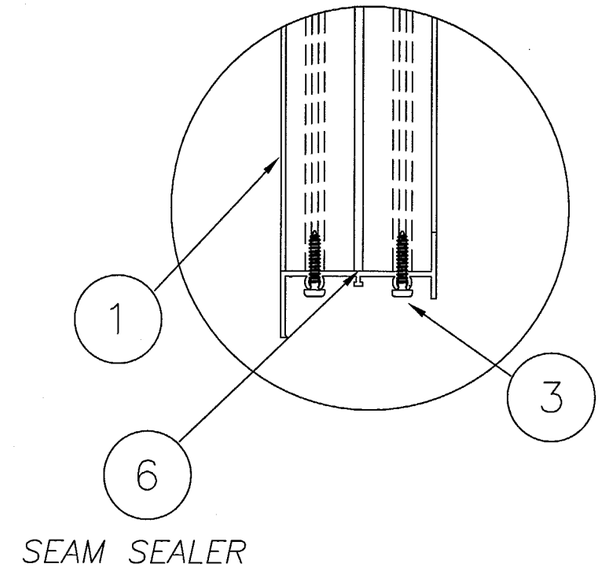

DETAIL C

TYP. 90° CORNER CONNECTION

APPROVED AS COMPLYING WITH THE
SOUTH FLORIDA BUILDING CODE
DATE SEP 13 2001
BY Manuel Perez
PRODUCT CONTROL DIVISION
BUILDING CODE COMPLIANCE OFFICE
ACCEPTANCE NO. 01-0102.03

REFERENCE TEST REPORTS:
FTL-2818, 2819, 2820, 2748, 2756 & 2758

8/22/01
Robert L. Clark, P.E.
PE #39712
Structural

PGT INDUSTRIES

	Revsd By: F.K.	Date: 8/15/01	Revisions: REDRAWN
Drawn By: J.J.	Date: 10/24/00		
Description: GLAZING & CORNER DETAILS			
Title: ALUMINUM FIXED WINDOW			

1070 TECHNOLOGY DRIVE NOKOMIS, FL 34275	P.O. BOX 1529 NOKOMIS, FL 34274	Series/Model: F-6000	Scale: NTS	Sheet: 7 of 9	Drawing No. 550	Rev: B

3/16" TEMPERED GLASS

NOTES:

1.) Negative Design Loads based on Comparative Analysis and Glass Table ASTM E1300.
2.) Positive Design Loads based on Comparative Analysis and Water Test Pressure.

3.) Numbers are for #10 screws or 3/16" Tapcons.

4.) Anchor maximum spacing: 15"

Negative Design Loads

Window Heights	Window Widths								
	19.125	24.000	26.500	37.000	48.000	60.000	97.000	111.000	120.000
26.000	135.00	135.00	135.00	135.00	135.00	135.00	135.00	122.90	112.60
39.000	135.00	135.00	135.00	135.00	135.00	135.00	78.90	69.60	65.50
51.000	135.00	135.00	135.00	135.00	90.60	80.30	77.20	63.00	55.80
60.000	135.00	135.00	135.00	135.00	90.60	58.00	58.00	58.00	58.00

Positive Design Loads

Window Heights	Window Widths								
	19.125	24.000	26.500	37.000	48.000	60.000	97.000	111.000	120.000
26.000	100.00	100.00	100.00	100.00	100.00	100.00	100.00	100.00	100.00
39.000	100.00	100.00	100.00	100.00	100.00	100.00	78.90	69.60	65.50
51.000	100.00	100.00	100.00	100.00	90.60	80.30	77.20	63.00	55.80
60.000	100.00	100.00	100.00	100.00	90.60	58.00	58.00	58.00	58.00

APPROVED AS COMPLYING WITH THE
SOUTH FLORIDA BUILDING CODE
DATE SEP 13 2001
BY Manuel Perez
PRODUCT CONTROL DIVISION
BUILDING CODE COMPLIANCE OFFICE
ACCEPTANCE NO. 01-0102.03

REFERENCE: TEST FTL-2818, 2819, 2820

9/20/01
Robert L. Clark, P.E.
PE #39712
Structural

PGT INDUSTRIES

Revsd By: F.K.	Date: 8/15/01	Revisions: REDRAWN	
Drawn By: J.J.	Date: 10/24/00		
Description: COMPARATIVE ANALYSIS, NON-IMPACT 3/16T			
Title: ALUMINUM FIXED WINDOW			

1070 TECHNOLOGY DRIVE
NOKOMIS, FL 34275

P.O. BOX 1529
NOKOMIS, FL 34274

Series/Model:	Scale:	Sheet:	Drawing No.	Rev:
F-6000	NTS	8 of 9	550	B

3/16" ANNEALED GLASS

NOTES:

1.) Negative Design Loads based on Comparative Analysis and Glass Table ASTM E1300.
2.) Positive Design Loads based on Comparative Analysis and Water Test Pressure.

3.) Numbers are for #10 screws or 3/16" Tapcons.

4.) Anchor maximum spacing: 15"

Negative Design Loads

Window Heights	Window Widths							
	19.125	24.000	26.500	37.000	48.000	53.125	60.000	74.000
26.000	120.00	95.10	81.00	78.60	59.20	53.60	48.40	42.20
37.000	115.10	85.70	77.40	40.00	40.00	40.00	37.00	28.90

Positive Design Loads

Window Heights	Window Widths							
	19.125	24.000	26.500	37.000	48.000	53.125	60.000	74.000
26.000	100.00	95.10	81.00	78.60	59.20	53.60	48.40	42.20
37.000	100.00	85.70	77.40	40.00	40.00	40.00	37.00	28.90

APPROVED AS COMPLYING WITH THE
SOUTH FLORIDA BUILDING CODE
DATE SEP 13 2001
BY Manuel Perez
PRODUCT CONTROL DIVISION
BUILDING CODE COMPLIANCE OFFICE
ACCEPTANCE NO. 01-0102.03

8/20/01
Robert L. Clark, P.E.
PE #39712
Structural

REFERENCE: TEST FTL-2748, 2756, 2758

PGT INDUSTRIES

	Revsd By: F.K.	Date: 8/15/01	Revisions: REDRAWN
Drawn By: J.J.	Date: 10/24/00		
Description: COMPARATIVE ANALYSIS, NON-IMPACT 3/16A			
Title: ALUMINUM FIXED WINDOW			

1070 TECHNOLOGY DRIVE NOKOMIS, FL 34275	P.O. BOX 1529 NOKOMIS, FL 34274	Series/Model: F-6000	Scale: NTS	Sheet: 9 of 9	Drawing No. 550	Rev: B