MIAMI-DADE COUNTY, FLORIDA
METRO-DADE FLAGLER BUILDING

BUILDING CODE COMPLIANCE OFFICE
METRO-DADE FLAGLER BUILDING
140 WEST FLAGLER STREET, SUITE 1603
MIAMI, FLORIDA 33130-1563
(305) 375-2901 FAX (305) 375-2908

CONTRACTOR LICENSING SECTION
(305) 375-2527 FAX (305) 375-2558

CONTRACTOR ENFORCEMENT DIVISION
(305) 375-2966 FAX (305) 375-2908

PRODUCT CONTROL DIVISION
(305) 375-2902 FAX (305) 372-6339

PRODUCT CONTROL NOTICE OF ACCEPTANCE

K.D. Windows, Inc.
3705 Shares Place
Riviera Beach ,FL 33404

Your application for Notice of Acceptance (NOA) of:
Series 455 Aluminum Horizontal Sliding Window - Impact Resistant
under Chapter 8 of the Code of Miami-Dade County governing the use of Alternate Materials and Types of Construction, and completely described herein, has been recommended for acceptance by the Miami-Dade County Building Code Compliance Office (BCCO) under the conditions specified herein.

This NOA shall not be valid after the expiration date stated below. BCCO reserves the right to secure this product or material at any time from a jobsite or manufacturer's plant for quality control testing. If this product or material fails to perform in the approved manner, BCCO may revoke, modify, or suspend the use of such product or material immediately. BCCO reserves the right to revoke this approval, if it is determined by BCCO that this product or material fails to meet the requirements of the South Florida Building Code.

The expense of such testing will be incurred by the manufacturer.

ACCEPTANCE NO.: 01-0110.04
EXPIRES: 11/29/2006

Raul Rodriguez
Chief Product Control Division

THIS IS THE COVERSHEET, SEE ADDITIONAL PAGES FOR SPECIFIC AND GENERAL CONDITIONS
BUILDING CODE & PRODUCT REVIEW COMMITTEE

This application for Product Approval has been reviewed by the BCCO and approved by the Building Code and Product Review Committee to be used in Miami-Dade County, Florida under the conditions set forth above.

Francisco J. Quintana, R.A.
Director
Miami-Dade County
Building Code Compliance Office

APPROVED: 11/29/2001

KD Windows, Inc.

ACCEPTANCE No.: 01-0110.04

APPROVED : NOV 29 2001

EXPIRES : NOV 29 2006

NOTICE OF ACCEPTANCE: SPECIFIC CONDITIONS

1. SCOPE

1.1 This approves an aluminum horizontal sliding window, as described in Section 2 of this Notice of Acceptance, designed to comply with the South Florida Building Code (SFBC), 1994 Edition for Miami-Dade County, for the locations where the pressure requirements, as determined by SFBC Chapter 23, do not exceed the Design Pressure Rating values indicated in the approved drawings.

2. PRODUCT DESCRIPTION

2.1 The **Series 455 Aluminum Horizontal Sliding Window –Impact Resistant** and its components shall be constructed in strict compliance with the following documents: Drawing No **HS 00-01**, Sheets 1 through 5 of 5, titled "Series 455 Aluminum Horizontal Sliding Window Large Missile Impact Resistant," prepared by manufacturer, dated 12/1/00, signed and sealed by Francisco Hernandez, P.E., bearing the Miami-Dade County Product Control approval stamp with the Notice of Acceptance number and approval date by the Miami-Dade County Product Control Division. These documents shall hereinafter be referred to as the approved drawings.

3. LIMITATIONS

3.1 This approval applies to OX, XO and XOX configurations of single unit applications only, as shown in approved drawings.

3.2 For Design Pressure Rating vs. Window Size, Configuration, see corresponding Design Pressure Chart in approved drawings.

4. INSTALLATION

4.1 The aluminum horizontal sliding window and its components shall be installed in strict compliance with the approved drawings.

4.2 Hurricane protection system (shutters): the installation of this unit **will not require** a hurricane protection system.

5. LABELING

5.1 Each unit shall bear a permanent label with the manufacturer's name or logo, city, state and following statement: "Miami-Dade County Product Control Approved".

6. BUILDING PERMIT REQUIREMENTS

6.1 Application for building permit shall be accompanied by copies of the following:

6.1.1 This Notice of Acceptance

6.1.2 Duplicate copies of the approved drawings, as identified in Section 2 of this Notice of Acceptance, clearly marked to show the components selected for the proposed installation.

6.1.3 Any other documents required by the Building Official or the South Florida Building Code (SFBC) in order to properly evaluate the installation of this system.

Manuel Perez

Manuel Perez, P.E. Product Control Examiner
Product Control Division

KD Windows, Inc.

ACCEPTANCE No.: 01-0110.04

APPROVED : NOV 29 2001

EXPIRES : NOV 29 2006

NOTICE OF ACCEPTANCE STANDARD CONDITIONS

1. Renewal of this Acceptance (approval) shall be considered after a renewal application has been filed and the original submitted documentation, including test supporting data, engineering documents, are no older than eight (8) years.

2. Any and all approved products shall be permanently labeled with the manufacturer's name, city, state, and the following statement: "Miami-Dade County Product Control Approved", or as specifically stated in the specific conditions of this Acceptance.

3. Renewals of Acceptance will not be considered if:
   a) There has been a change in the South Florida Building Code affecting the evaluation of this product and the product is not in compliance with the code changes;
   b) The product is no longer the same product (identical) as the one originally approved;
   c) If the Acceptance holder has not complied with all the requirements of this acceptance, including the correct installation of the product;
   d) The engineer who originally prepared, signed and sealed the required documentation initially submitted is no longer practicing the engineering profession.

4. Any revision or change in the materials, use, and/or manufacture of the product or process shall automatically be cause for termination of this Acceptance, unless prior written approval has been requested (through the filing of a revision application with appropriate fee) and granted by this office.

5. Any of the following shall also be grounds for removal of this Acceptance:
   a) Unsatisfactory performance of this product or process.
   b) Misuse of this Acceptance as an endorsement of any product, for sales, advertising or any other purpose.

6. The Notice of Acceptance number preceded by the words Miami-Dade County, Florida, and followed by the expiration date may be displayed in advertising literature. If any portion of the Notice of Acceptance is displayed, then it shall be done in its entirety.

7. A copy of this Acceptance as well as approved drawings and other documents, where it applies, shall be provided to the user by the manufacturer or its distributors and shall be available for inspection at the job site at all time. The engineer need not reseal the copies.

8. Failure to comply with any section of this Acceptance shall be cause for termination and removal of Acceptance.

9. This Notice of Acceptance consists of pages 1, 2 and this last page 3.

END OF THIS ACCEPTANCE

Manuel Perez

Manuel Perez, P. E., Product Control Examiner
Product Control Division

KD Windows, Inc.

ACCEPTANCE No.: **01-0110.04**

APPROVED : NOV 29 2001

EXPIRES : NOV 29 2006

NOTICE OF ACCEPTANCE: EVIDENCE SUBMITTED

(For File ONLY. Not part of NOA.)

A. DRAWINGS

1. Manufacturer's die drawings and sections.
2. Drawing No **HS 00-01**, Sheets 1 through 5 of 5, titled "Series 455 Aluminum Horizontal Sliding Window Large Missile Impact Resistant," prepared by manufacturer, dated 12/1/00, signed and sealed by Francisco Hernandez, P.E.

B. TESTS

1. Test reports on 1 Large Missile Impact Test per SFBC, PA 201-94,
   2) Cyclic Wind Pressure Loading per SFBC, PA 203-94
   along with marked-up drawings and installation diagram of 3 specimens of XOX aluminum horizontal sliding window , prepared by Hurricane Test Laboratory, Inc., Test Report No. **HTL-0145-0214-98**, dated 2/13/98, signed and sealed by Timothy S. Marshall, P.E.
2. Test reports on 1) Air Infiltration Test, per PA 202-94
   2) Uniform Static Air Pressure Test, Loading per PA 202-94
   3) Water Resistance Test, per PA 202-94
   along with marked-up drawings and installation diagram of 1 specimen of XOX aluminum horizontal sliding window , prepared by Hurricane Test Laboratory, Inc., Test Report No. **HTL-0145-0803-98**, dated 8/25/98, signed and sealed by Timothy S. Marshall, P.E.

C. CALCULATIONS

1. Comparative analysis and anchor calculations, prepared by Francisco Hernandez, P.E., dated 12/1/00, and revised on 10/29/01, signed and sealed by Francisco Hernandez, P.E.

D. MATERIAL CERTIFICATIONS

1. Notice of Acceptance No. **98-0728.05** issued to Solutia Inc., for "Saflex IIIG PVB Polyvinyl butyral interlayer," dated 8/27/98, expiring on 5/21/01.

E. STATEMENTS

1. Laboratory compliance letter for Test Report No. **HTL-0145-0803-98**, issued by Hurricane Test Laboratory, Inc., dated 01/12/99, signed and sealed by Timothy S. Marshall, P.E.
2. Statement letter of no financial interest, dated 12/1/00, signed and sealed by Francisco Hernandez, P.E.
3. Letter dated August 1, 2001 excluding this file from application of Ordinance 00-174 to comply with ASTM E 1300. Also confirming that KD Windows Inc. is the legal owner of all assets of American Window Corporation, signed by Jaime Gascon.
4. Letter dated 08/03/01 naming Mr. Gus Montero as contact person for KD Windows, Inc. signed by Robert Hoffman.

Manuel Perez

Manuel Perez, P.E. Product Control Examiner
Product Control Division

DESIGN PRESSURE CHART (OX)

	MARK	DIMENSIONS		NUMBER OF ANCHORS		DESIGN PRESSURE	
		WIDTH	HEIGHT	HEAD & SILL	JAMBS	POS.	NEG.
STANDARD SIZES	1/2 32	26 1/2"	26"	2	2	60.0	70.0
	22	37"		3		60.0	70.0
	32	53 1/8"		4		60.0	70.0
	2/22	74"		5		60.0	70.0
	1/2 33	26 1/2"	38 3/8"	2	3	60.0	70.0
	23	37"		3		60.0	70.0
	33	53 1/8"		4		60.0	70.0
	2/23	74"		5		60.0	70.0
	1/2 34	26 1/2"	50 5/8"	2	4	60.0	70.0
	24	37"		3		60.0	70.0
	34	53 1/8"		4		60.0	70.0
	2/34	74"		5		60.0	70.0
	1/2 35	26 1/2"	63"	2	5	60.0	70.0
	25	37"		3		60.0	70.0
	35	53 1/8"		4		60.0	70.0
	2/25	74"		5		60.0	70.0
MODULAR SIZES	2020	24"	24"	2	2	60.0	70.0
	3020	36"		3		60.0	70.0
	4020	48"		3		60.0	70.0
	5020	60"		4		60.0	70.0
	6020	72"		4		60.0	70.0
	2030	24"	36"	2	3	60.0	70.0
	3030	36"		3		60.0	70.0
	4030	48"		3		60.0	70.0
	5030	60"		4		60.0	70.0
	6030	72"		4		60.0	70.0
	2040	24"	48"	2	4	60.0	70.0
	3040	36"		3		60.0	70.0
	4040	48"		3		60.0	70.0
	4040E	50"		3		60.0	70.0
	5040	60"		4		60.0	70.0
	6040	72"		4		60.0	70.0
	3050	36"	60"	3	4	60.0	70.0
	4050	48"		3		60.0	70.0
	5050	60"		4		60.0	70.0
	6050	72"		4		60.0	70.0

BASED ON TEST REPORT HTL-0145-0214-98
PA 201/203 AND HTL-0145-0803-98 PA 202
PERFORMED BY HURRICANE TEST LABORATORY, INC.

DESIGN PRESSURE CHART (XOX)

	MARK	DIMENSIONS		NUMBER OF ANCHORS		DESIGN PRESSURE	
		WIDTH	HEIGHT	HEAD & SILL	JAMBS	POS.	NEG.
STANDARD SIZES	2/32	106 1/4"	26"	6	2	60.0	70.0
	3/22	111"		6		60.0	70.0
	-	118"		7		60.0	70.0
	2/33	106 1/4"	38 3/8"	6	3	60.0	70.0
	3/23	111"		6		60.0	70.0
	-	118"		7		60.0	70.0
	2/34	106 1/4"	50 5/8"	6	4	60.0	70.0
	3/24	111"		6		60.0	70.0
	-	118"		7		60.0	70.0
	2/35	106 1/4"	63"	6	5	60.0	70.0
	3/25	111"		6		60.0	67.50
		118"		7		60.0	70.0
MODULAR SIZES	6020	72"	24"	4	2	60.0	70.0
	7020	84"		5		60.0	70.0
	8020	96"		6		60.0	70.0
	9020	108"		6		60.0	70.0
	6030	72"	36"	4	3	60.0	70.0
	7030	84"		5		60.0	70.0
	8030	96"		6		60.0	70.0
		108"		6		60.0	70.0
	6040	72"	48"	4	4	60.0	70.0
	7040	84"		5		60.0	70.0
	8040	96"		6		60.0	70.0
	9040	108"		6		60.0	70.0
	6050	72"	60"	4	4	60.0	70.0
	7050	84"		5		60.0	70.0
	8050	96"		6		60.0	70.0
	9050	108"		6		60.0	70.0

BASED ON TEST REPORT HTL -0145-0214-98
PERFORMED BY HURRICANE TEST LABORATORY, INC.

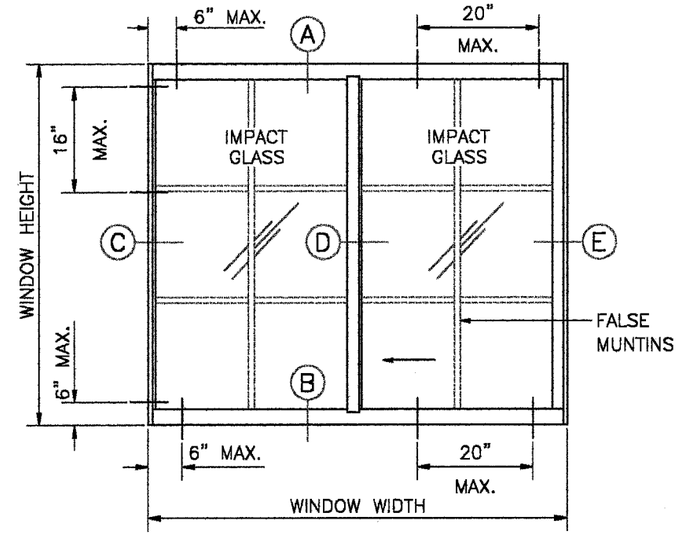

TYPICAL ELEVATION (OX) OR (XO)

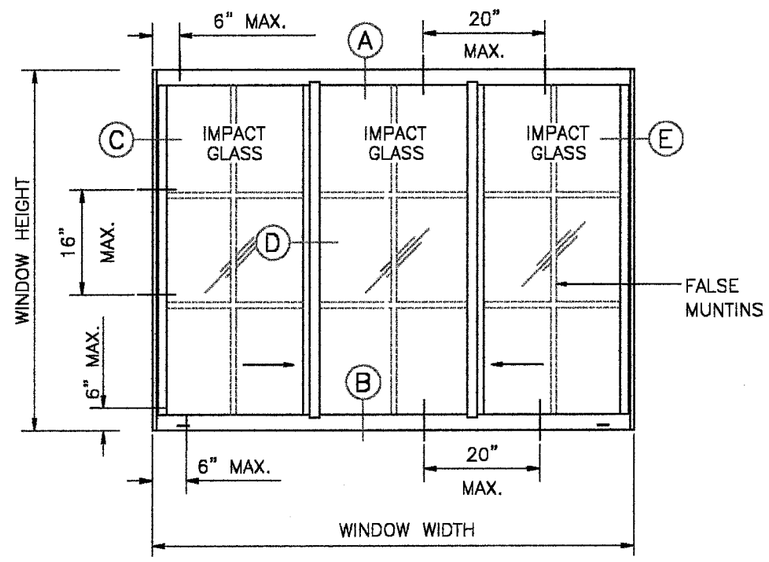

TYPICAL ELEVATION (XOX)

APPROVED AS COMPLYING WITH THE SOUTH FLORIDA BUILDING CODE
DATE NOV 29 2001
BY Manuel Perez
PRODUCT CONTROL DIVISION
BUILDING CODE COMPLIANCE OFFICE
ACCEPTANCE NO. 01-0110-04

11-05-01
FRANCISCO HERNANDEZ
FLORIDA PE # 51393

KD Windows
3705 SHARES PLACE
RIVIERA BEACH, FL 33404
Ph: (561)-845-1401

FRANCISCO HERNANDEZ P. E.
Structural Engineering
351 NW 82nd AVE #1118
Miami, Florida 33126
Phone (305) 264-7919
Fax (305) 266 3427

SERIES 455 ALUMINUM HORIZONTAL SLIDING WINDOW LARGE MISSILE IMPACT RESISTANT

Drawn By: MH
Date: 12-1-00
Scale: 3/8"=1'
Revision:
Revision:

DRAWING NO. HS 00-01

SHEET 1 OF 5

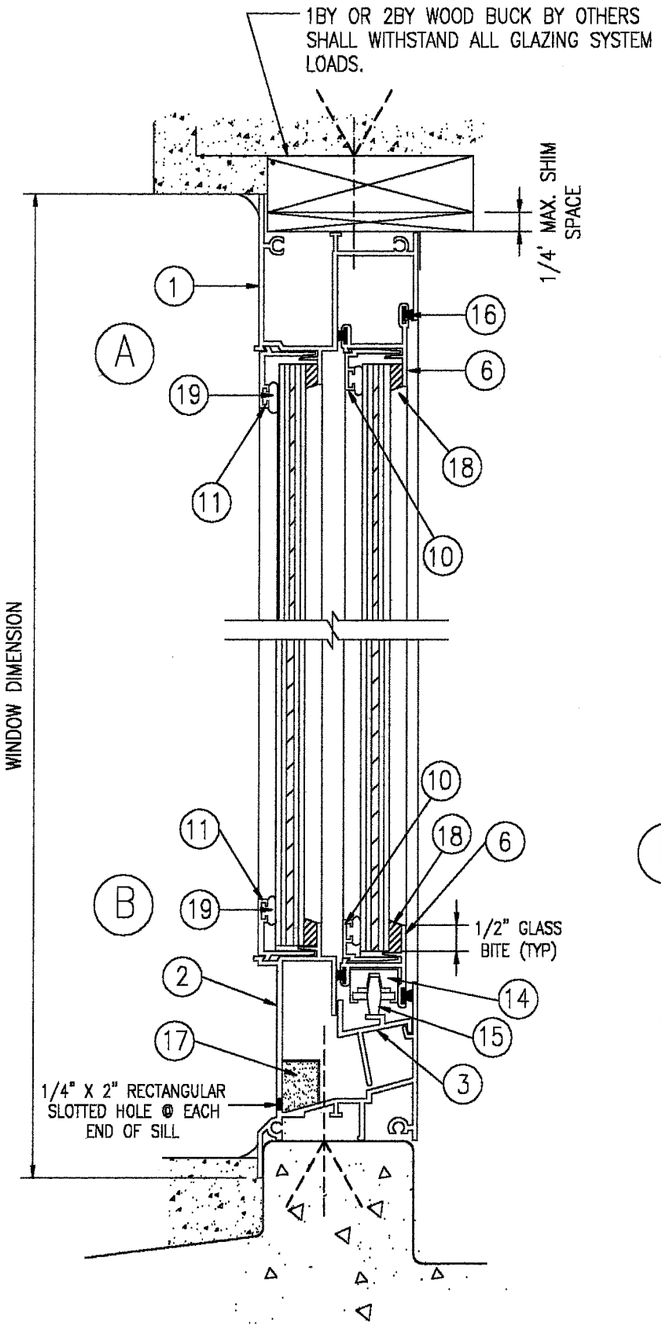

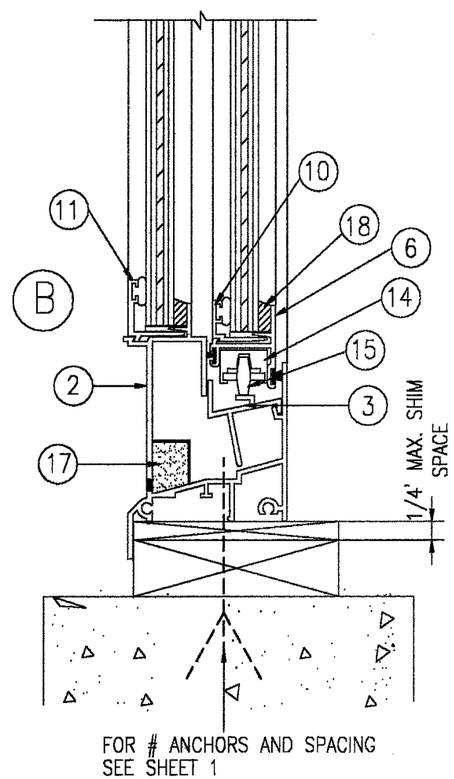

VERTICAL SECTIONS

METHOD OF ATTACHMENT

3/16" TAPCON, 1 1/4" MIN. EMBEDMENT INTO CONCRETE FOR CONNECTION THRU 1BY WOOD BUCKS TO MASONRY OR DIRECTLY TO MASONRY

3/16" TAPCON, 1 1/2" MIN. PENETRATION INTO WOOD FOR ATTACHMENT TO 2BY WOOD BUCKS OR TO WOOD STRUCTURE

GLAZING:

MATERIAL:

11/32" THICK (NOMINAL) LAMINATED GLASS WITH THE FOLLOWING COMPONENTS:

1/8" ANNEALED GLASS
.090 SAFLEX PVB INTERLAYER
1/8" ANNEALED GLASS

METHOD:

EXTERIOR GLAZED WITH K.D. PARTS #371 AND #372 GLAZING STOPS.

APPROVED AS COMPLYING WITH THE SOUTH FLORIDA BUILDING CODE
DATE NOV 29 2001
BY Manuel Díaz
PRODUCT CONTROL DIVISION
BUILDING CODE COMPLIANCE OFFICE
ACCEPTANCE NO. 01-0110.04

10-28-01
FRANCISCO HERNANDEZ
FL. PE # 51393

KD Windows
3705 SHARES PLACE
RIVIERA BEACH, FL 33404
Ph: (561)-845-1401

FRANCISCO HERNANDEZ P. E.
Structural Engineering
351 NW 82nd AVE #1118
Miami, Florida 33126
Phone (305) 264-7919
Fax (305) 266 3427

SERIES 455 ALUMINUM
HORIZONTAL SLIDING WINDOW
LARGE MISSILE IMPACT RESISTANT

Drawn By: MH
Date: 12/1/00
Scale: 1/2"=1"
Revision:
Revision:

DRAWING NO.
HS00-01

SHEET
2 OF 5

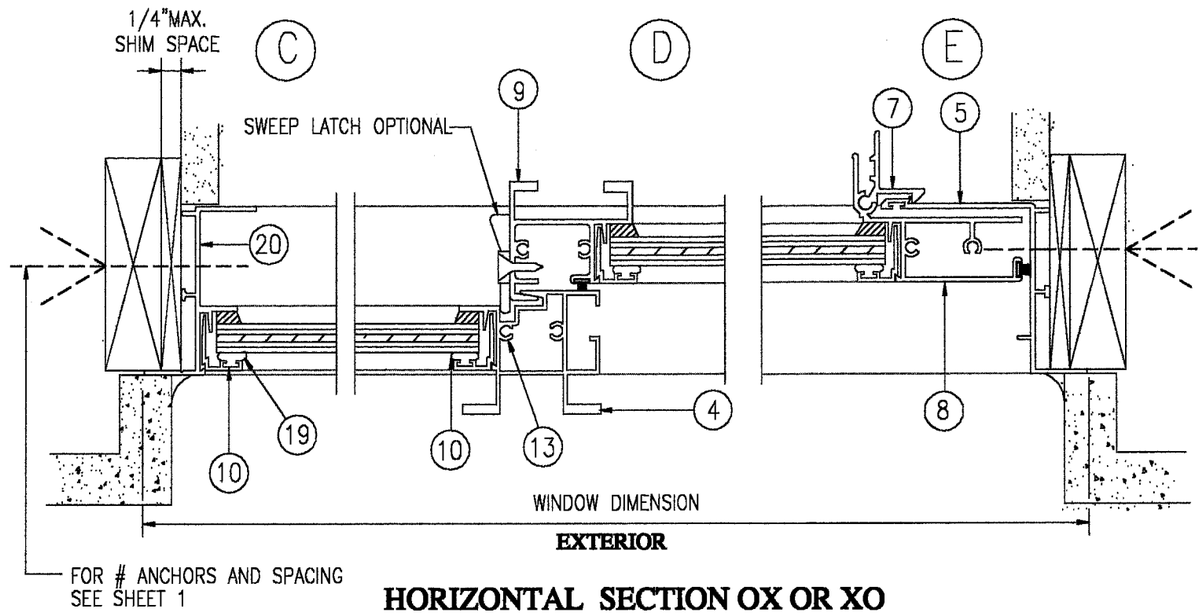

HORIZONTAL SECTION OX OR XO

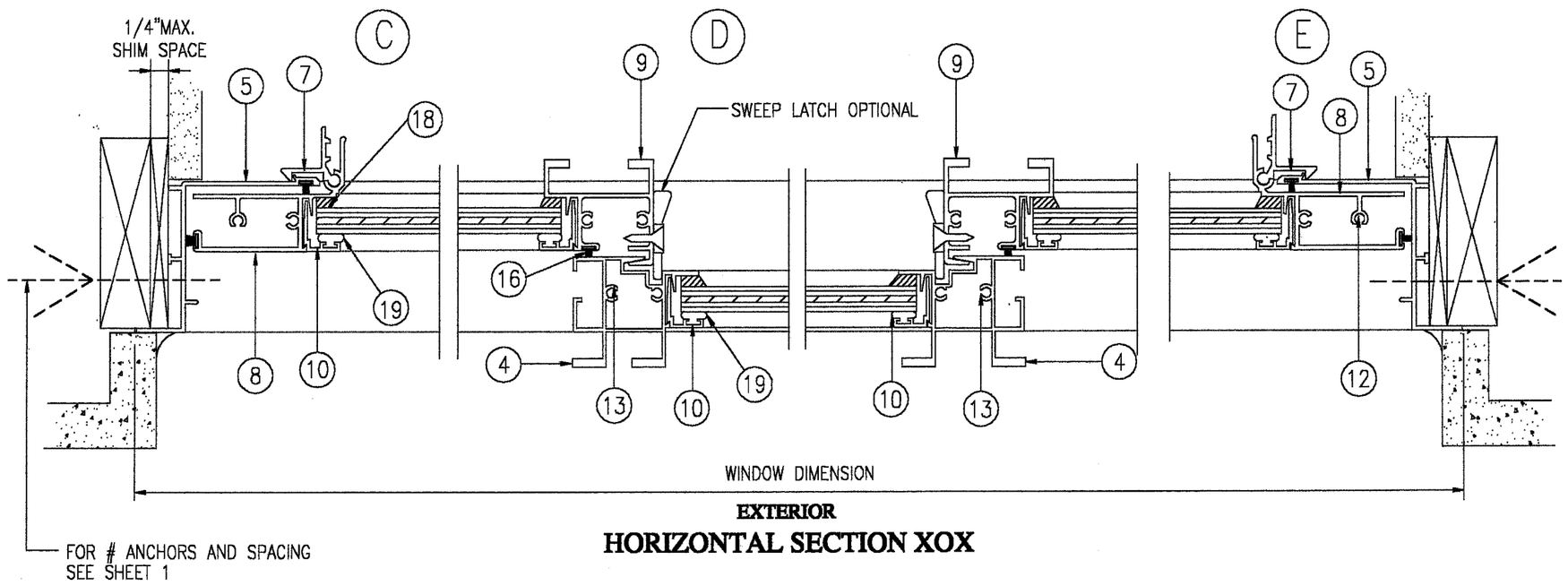

HORIZONTAL SECTION XOX

APPROVED AS COMPLYING WITH THE
SOUTH FLORIDA BUILDING CODE
DATE NOV 29 2001
BY
PRODUCT CONTROL DIVISION
BUILDING CODE COMPLIANCE OFFICE
ACCEPTANCE NO. 01-0110.04

10-28-01

FRANCISCO HERNANDEZ
FL PE # 51393

KD Windows
3705 SHARES PLACE
RIVIERA BEACH, FL 33404
Ph: (561)-845-1401

FRANCISCO HERNANDEZ P. E.
Structural Engineering
351 NW 82nd AVE #1118
Miami, Florida 33126
Phone (305) 264-7919
Fax (305) 266 3427

SERIES 455 ALUMINUM
HORIZONTAL SLIDING WINDOW
LARGE MISSILE IMPACT RESISTANT

Drawn By: MH
Date: 12-1-00
Scale: 1/2"=1"
Revision:
Revision:

DRAWING NO.
HS00-01

SHEET
3 OF 5

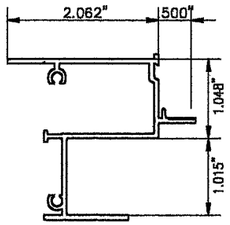

FRAME HEAD
AW 353

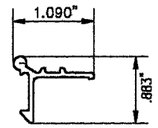

LATCH
AW 354

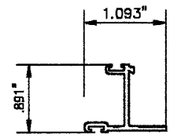

SASH TOP & BOTTOM
AW 355

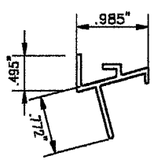

SILL TRACK
AW 402

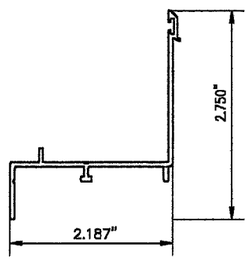

FRAME JAMB
AW 361

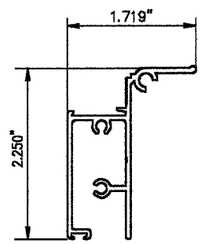

SASH VENT JAMB
AW 360

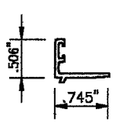

GLAZING STOP
AW 372

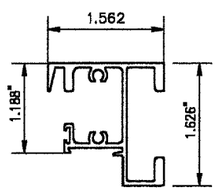

VENT MEETING RAIL
AW 374

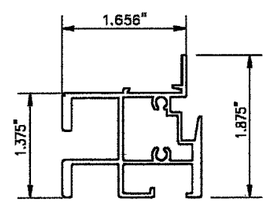

FIXED MEETING RAIL
AW 376

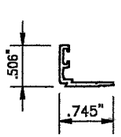

GLAZING STOP
AW 371

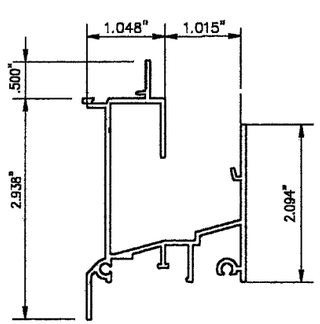

FRAME SILL
AW 401

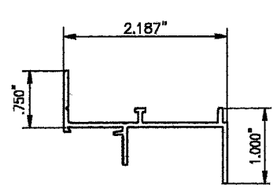

FRAME JAMB
AW 359

MATERIAL LIST - WINDOWS OX OR XO AND XOX

No	PART	QTY		PART DESCRIPTION	MATERIAL
		OX	XOX		
1	AW-353	1	1	FRAME HEAD	6063-T5
2	AW-401	1	1	FRAME SILL	6063-T5
3	AW-402	1	1	FRAME SILL TRACK	6063-T5
4	AW-376	1	2	FIXED MEETING RAIL	6063-T5
5	AW-361	1	2	FRAME JAMB	6063-T5
6	AW-355	2	4	SASH TOP & BOTTOM	6063-T5
7	AW-354	1	2	LATCH	6063-T5
8	AW-360	1	2	SASH VENT JAMB	6063-T5
9	AW-374	1	2	VENT MEETING RAIL	6063-T5
10	AW-371	AS REQUIRED-GLAZING STOP			6063-T5
11	AW-372	AS REQUIRED-GLAZING STOP			6063-T5
12	–	AS REQ'D		ASSEMBLY SCREWS	#8X1R.H.PHLIPS
13	–	AS REQ'D		ASSEMBLY SCREWS	#8X3R.H.PHLIPS
14	–	4	8	PLASTIC HOUSING	–
15	–	2	4	PLASTIC WHEEL	–
16	–	AS REQ'D		FIN SEAL PILE	–
17	–	2	2	2" FOAM	–
18	–	AS REQ'D		899 DOW CORNING	–
19	–	AS REQ'D		GASKET	VINYL
20	AW-359	1	NONE	FRAME JAMB	6063-T5

APPROVED AS COMPLYING WITH THE
SOUTH FLORIDA BUILDING CODE
DATE NOV 29 2001
BY Manuel Estrada
PRODUCT CONTROL DIVISION
BUILDING CODE COMPLIANCE OFFICE
ACCEPTANCE NO. 01-0110.04

10-28-01
FRANCISCO HERNANDEZ
FL PE # 51393

KD Windows
3705 SHARES PLACE
RIVIERA BEACH, FL 33404
Ph: (561)-845-1401

FRANCISCO HERNANDEZ P. E.
Structural Engineering
351 NW 82nd AVE #1118
Miami, Florida 33126
Phone (305) 264-7919
Fax (305) 266 3427

SERIES 455 ALUMINUM HORIZONTAL SLIDING WINDOW LARGE MISSILE IMPACT RESISTANT

Drawn By: MH
Date: 12-1-00
Scale: 1/2"=1"
Revision:
Revision:

DRAWING NO. HS00-01

SHEET 4 OF 5

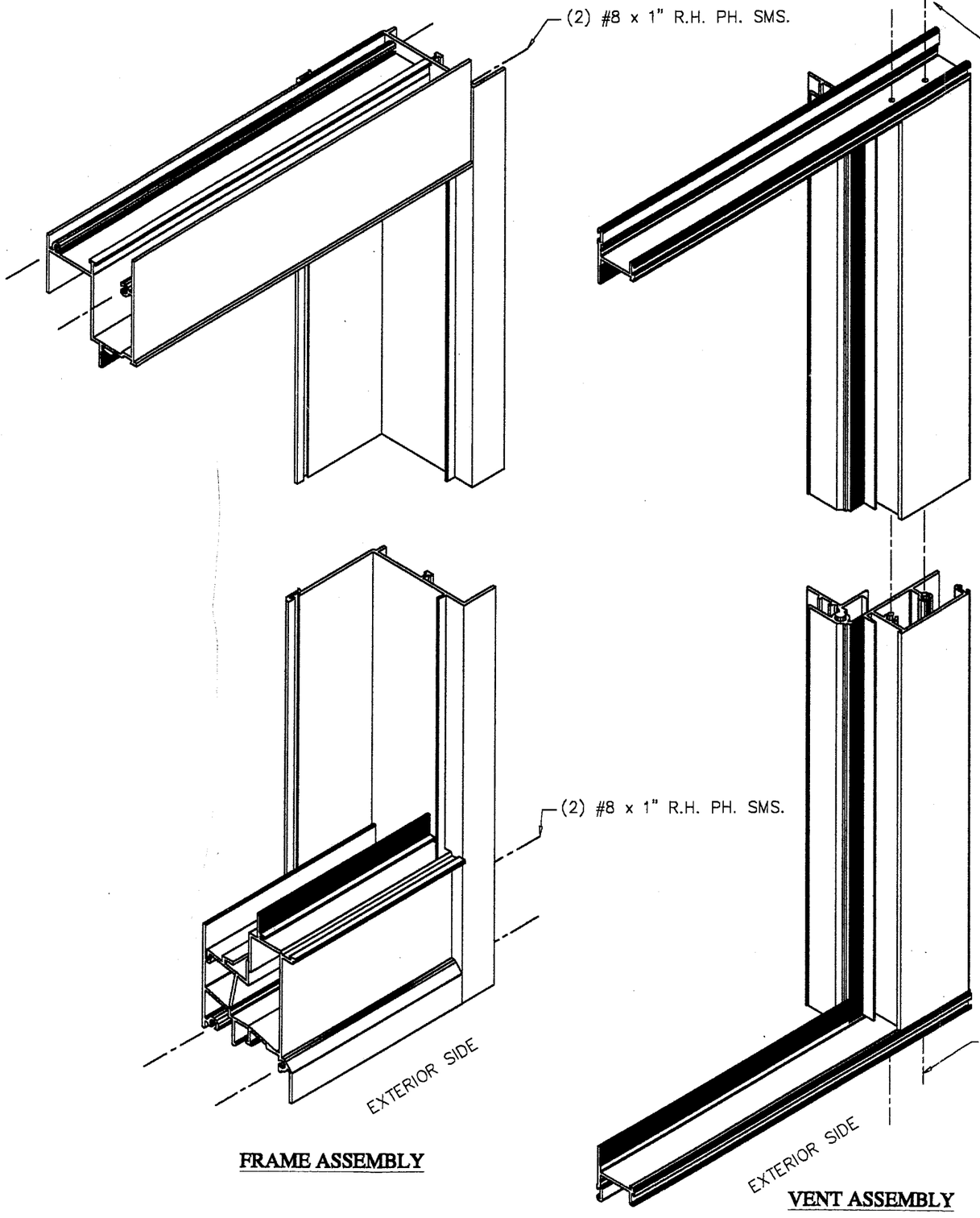

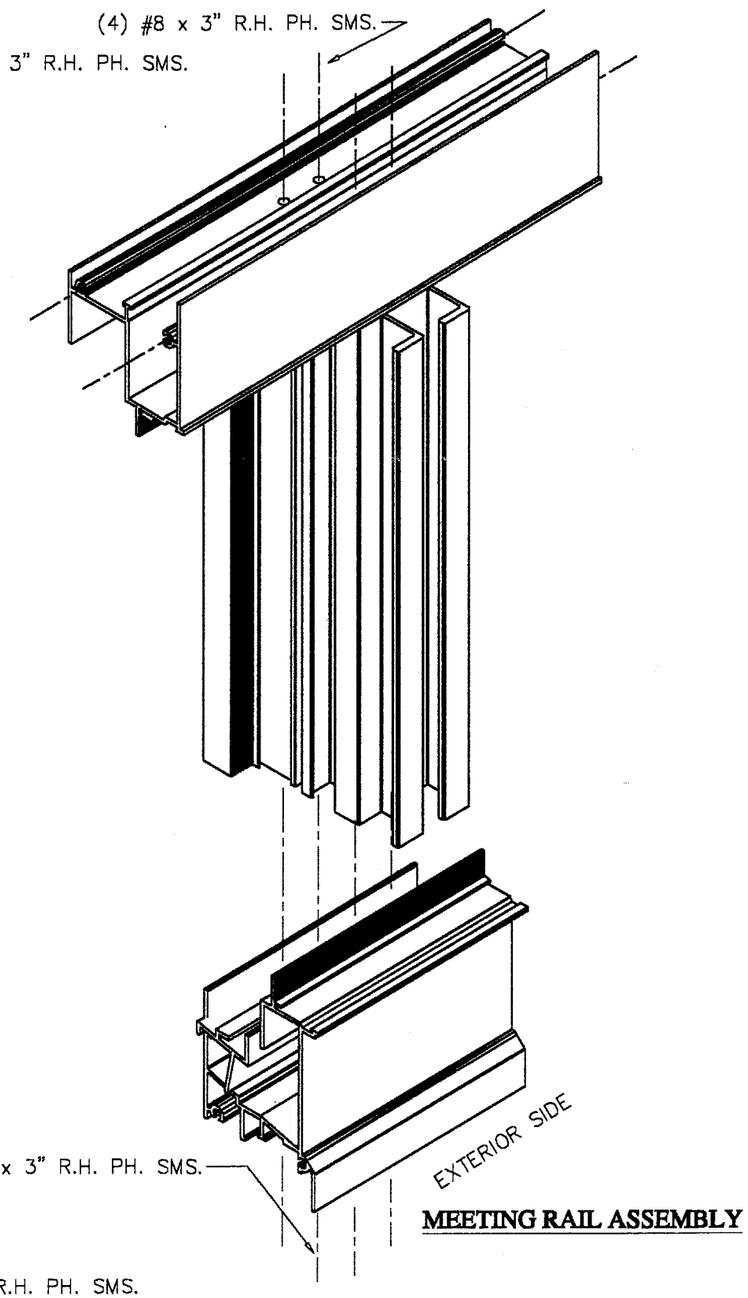

APPROVED AS COMPLYING WITH THE SOUTH FLORIDA BUILDING CODE
DATE NOV 29 2001
BY
PRODUCT CONTROL DIVISION
BUILDING CODE COMPLIANCE OFFICE
ACCEPTANCE NO 01-0110.04

10-28-01
FRANCISCO HERNANDEZ
FL PE # 51393

KD Windows
3705 SHARES PLACE
RIVIERA BEACH, FL 33404
Ph: (561)-845-1401

FRANCISCO HERNANDEZ P. E.
Structural Engineering
351 NW 82nd AVE #1118
Miami, Florida 33126
Phone (305) 264-7919
Fax (305) 266 3427

SERIES 455 ALUMINUM HORIZONTAL SLIDING WINDOW LARGE MISSILE IMPACT RESISTANT

Drawn By: MH
Date: 12-1-00
Scale: 1/2"=1"
Revision:
Revision:

DRAWING NO. HS00-01

SHEET 5 OF 5