MIAMI-DADE COUNTY, FLORIDA
METRO-DADE FLAGLER BUILDING

BUILDING CODE COMPLIANCE OFFICE
METRO-DADE FLAGLER BUILDING
140 WEST FLAGLER STREET, SUITE 1603
MIAMI, FLORIDA 33130-1563
(305) 375-2901 FAX (305) 375-2908

CONTRACTOR LICENSING SECTION
(305) 375-2527 FAX (305) 375-2558

CONTRACTOR ENFORCEMENT DIVISION
(305) 375-2966 FAX (305) 375-2908

PRODUCT CONTROL DIVISION
(305) 375-2902 FAX (305) 372-6339

PRODUCT CONTROL NOTICE OF ACCEPTANCE

Sunshine Windows Manufacturing, Inc.
1745 W. 33 rd Place
Hialeah ,FL 33012

Your application for Notice of Acceptance (NOA) of:
Series 1600 Aluminum Sliding Glass Door (XO or OX)
under Chapter 8 of the Code of Miami-Dade County governing the use of Alternate Materials and Types of Construction, and completely described herein, has been recommended for acceptance by the Miami-Dade County Building Code Compliance Office (BCCO) under the conditions specified herein.

This NOA shall not be valid after the expiration date stated below. BCCO reserves the right to secure this product or material at any time from a jobsite or manufacturer's plant for quality control testing. If this product or material fails to perform in the approved manner, BCCO may revoke, modify, or suspend the use of such product or material immediately. BCCO reserves the right to revoke this approval, if it is determined by BCCO that this product or material fails to meet the requirements of the South Florida Building Code.

The expense of such testing will be incurred by the manufacturer.

ACCEPTANCE NO.: 01-0112.01
EXPIRES: 09/30/2006

Raul Rodriguez
Chief Product Control Division

THIS IS THE COVERSHEET, SEE ADDITIONAL PAGES FOR SPECIFIC AND GENERAL CONDITIONS
BUILDING CODE & PRODUCT REVIEW COMMITTEE

This application for Product Approval has been reviewed by the BCCO and approved by the Building Code and Product Review Committee to be used in Miami-Dade County, Florida under the conditions set forth above.

Francisco J. Quintana, R.A.
Director
Miami-Dade County
Building Code Compliance Office

APPROVED: 09/30/2001

NOTICE OF ACCEPTANCE: SPECIFIC CONDITIONS

1. SCOPE

1.1 This approves an aluminum sliding glass door, as described in Section 2 of this Notice of Acceptance, designed to comply with the South Florida Building Code (SFBC), 1994 Edition for Miami-Dade County, for the locations where the pressure requirements, as determined by SFBC Chapter 23, do not exceed the Design Pressure Rating values indicated in the approved drawings.

2. PRODUCT DESCRIPTION

2.1 The **Series "1600" Aluminum Sliding Glass Door (XO or OX)**–and its components shall be constructed in strict compliance with the following documents: Drawing No **SGDOO-03**, titled "Series 1600 Aluminum Sliding Glass Door" Sheets 1 through 3 of 3 dated 08-12-2001 prepared, signed and sealed by Francisco Hernandez, P. E., bearing the Miami-Dade County Product Control approval stamp with the Notice of Acceptance number and approval date by the Miami-Dade County Product Control Division. These documents shall hereinafter be referred to as the approved drawings.

3. LIMITATIONS

3.1 This approval applies to single unit applications only, as shown in approved drawings.

3.2 Head receptor is not allowed to be used in this installation.

4. INSTALLATION

4.1 The aluminum sliding glass door and its components shall be installed in strict compliance with the approved drawings.

4.2 Hurricane protection system (shutters): The installation of this unit **will require** a hurricane protection system.

5. LABELING

5.1 Each unit shall bear a permanent label with the manufacturer's name or logo, city, state and following statement: "Miami-Dade County Product Control Approved".

6. BUILDING PERMIT REQUIREMENTS

6.1 Application for building permit shall be accompanied by copies of the following:

- **6.1.1** This Notice of Acceptance
- **6.1.2** Duplicate copies of the approved drawings, as identified in Section 2 of this Notice of Acceptance, clearly marked to show the components selected for the proposed installation.
- **6.1.3** Any other documents required by the Building Official or the South Florida Building Code (SFBC) in order to properly evaluate the installation of this system.

Ishaq I. Chanda

Ishaq I. Chanda, P.E. Product Control Examiner
Product Control Division

Sunshine Window Manufacturing Inc.

ACCEPTANCE No.: 01-0112.01

APPROVED September 30, 2001

APPROVED September 30, 2006

NOTICE OF ACCEPTANCE: STANDARD CONDITIONS

1. Renewal of this Acceptance (approval) shall be considered after a renewal application has been filed and the original submitted documentation, including test supporting data, engineering documents, are no older than eight (8) years.

2. Any and all approved products shall be permanently labeled with the manufacturer's name, city, state, and the following statement: "Miami-Dade County Product Control Approved", or as specifically stated in the specific conditions of this Acceptance.

3. Renewals of Acceptance will not be considered if:
   a) There has been a change in the South Florida Building Code affecting the evaluation of this product and the product is not in compliance with the code changes;
   b) The product is no longer the same product (identical) as the one originally approved;
   c) If the Acceptance holder has not complied with all the requirements of this acceptance, including the correct installation of the product;
   d) The engineer who originally prepared, signed and sealed the required documentation initially submitted is no longer practicing the engineering profession.

4. Any revision or change in the materials, use, and/or manufacture of the product or process shall automatically be cause for termination of this Acceptance, unless prior written approval has been requested (through the filing of a revision application with appropriate fee) and granted by this office.

5. Any of the following shall also be grounds for removal of this Acceptance:
   a) Unsatisfactory performance of this product or process.
   b) Misuse of this Acceptance as an endorsement of any product, for sales, advertising or any other purpose.

6. The Notice of Acceptance number preceded by the words Miami-Dade County, Florida, and followed by the expiration date may be displayed in advertising literature. If any portion of the Notice of Acceptance is displayed, then it shall be done in its entirety.

7. A copy of this Acceptance as well as approved drawings and other documents, where it applies, shall be provided to the user by the manufacturer or its distributors and shall be available for inspection at the job site at all time. The engineer need not reseal the copies.

8. Failure to comply with any section of this Acceptance shall be cause for termination and removal of Acceptance.

9. This Notice of Acceptance consists of pages 1, 2 and this last page 3.

Ishaq I. Chanda

Ishaq I. Chanda , P. E. Product Control Examiner
Product Control Division

END OF THIS ACCEPTANCE

Sunshine Window Manufacturing Inc.

ACCEPTANCE No.: 01-0112.01

APPROVED September 30, 2001

APPROVED September 30, 2006

NOTICE OF ACCEPTANCE: EVIDENCE SUBMITTED

A. DRAWINGS

1. Manufacturer's die drawings and sections.
2. Drawing No **SGDOO-03**, titled "Series 1600 Aluminum Sliding Glass Door" Sheets 1 through 3 of 3 dated 08-12-2001 prepared, signed and sealed by Francisco Hernandez, P. E.

B. TESTS

1. Test reports on 1) Air Infiltration Test, per PA 202-94
   2) Uniform Static Air Pressure Test, Loading per PA 202-94
   3) Water Resistance Test, per PA 202-94
   4) Forced Entry Test, per SFBC 3603.2 (b) and PA 202-94

   along with marked-up drawings and installation diagram of an aluminum sliding glass door(XO), prepared by Fenestration Testing laboratory Inc, Test Report No. **FTL-2493 (report 6)** dated 02-28-2000, signed and sealed by Aldo P. Gonzales, P.E.

C. CALCULATIONS

1. Comparative analysis and structural analysis dated 12-12-2000, revised on 08-11-2001, prepared, signed and sealed by Francisco Hernandez, P.E.

D. MATERIAL CERTIFICATIONS

1. None

E. STATEMENTS

1. Statement letter of conformance, dated December 12, 2000, signed & sealed by Francisco Hernandez, P.E.
2. Statement letter of no financial interest, dated December 12, 2000 signed & sealed by Francisco Hernandez, P.E.
3. Statement letter of compliance dated 07-20-00 issued by Fenestration Testing laboratory Inc, signed and sealed by Aldo P. Hernandez, P.E.

F.OTHER

1. Glazing complies w ASTME-1300-98.

Ishaq I. Chanda

Ishaq I. Chanda , P. E. , Product Control Examiner
Product Control Division

DESIGN PRESSURE CHART - PSF (OX/XO)

PANEL DIMENSION IN INCHES		COMPARATIVE ANALYSIS BASED ON FTL 2493	
WIDTH	HEIGHT	POSITIVE	NEGATIVE
24	79	55.0	68.3
30		55.0	57.2
36		50.0	50.0

TYPICAL ANCHORS:

INTO 1" BY WOOD BUCK OR INTO CONCRETE

3/16" TAPCONS (BY ELCO INDUSTRIES) IN PAIRS 1 1/4" MINIMUM EMBEDMENT INTO CONCRETE.

INTO 2" BY WOOD BUCK OR WOOD STRUCTURE

3/16" TAPCONS (BY ELCO INDUSTRIES) IN PAIRS 1 1/2" MINIMUM PENETRATION INTO WOOD.

GLAZING:

MATERIAL:

3/16" TEMPERED GLASS

METHOD:

CHANNEL GLAZED WITH 1/2" GLAZING PENETRATION USING A FLEXIBLE VINYL GLAZING CHANNEL (BY WIBORG VINYL COMPANY)

SEALANT:

FRAME CORNERS, INSTALLATION SCREWS AND PANEL CORNER SEAMS WERE SEALED WITH A WHITE COLORED SEALANT (BY SCHNEE-MOREHEAD)

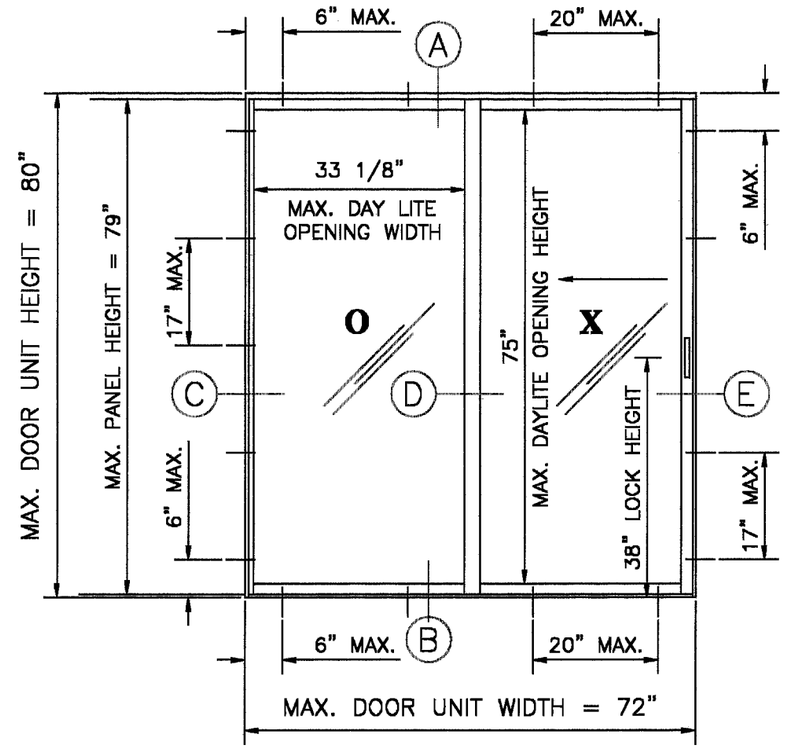

OX / XO (2 PANELS - 2 TRACKS)

ELEVATION

MIAMI-DADE COUNTY APPROVED SHUTTERS ARE REQUIRED.

APPROVED AS COMPLYING WITH THE SOUTH FLORIDA BUILDING CODE
DATE SEPTEMBER 30, 2001
BY Ishaq I. Chanda
PRODUCT CONTROL DIVISION
BUILDING CODE COMPLIANCE OFFICE
ACCEPTANCE NO. 01-0112.01

8-12-01
FRANCISCO HERNANDEZ
FL. PE # 51393

Sunshine Windows Manufacturing, Inc.
1745 W. 33rd Place
Hialeah, Florida 33012
Ph: (305)364-9952
Fax:(305)828-5118

FRANCISCO HERNANDEZ P. E.
Structural Engineering
351 NW 82nd AVE #1118
Miami, Florida 33126
Phone (305) 264 7919
Fax (305) 266 3427

SERIES 1600
ALUMINUM SLIDING GLASS DOOR
STANDARD INTERLOCK

Drawn By: JN
Date: 8-12-01
Scale: 1/2"=1"
Revision:
Revision:

DRAWING NO.
SGD00-03

SHEET
1 OF 3

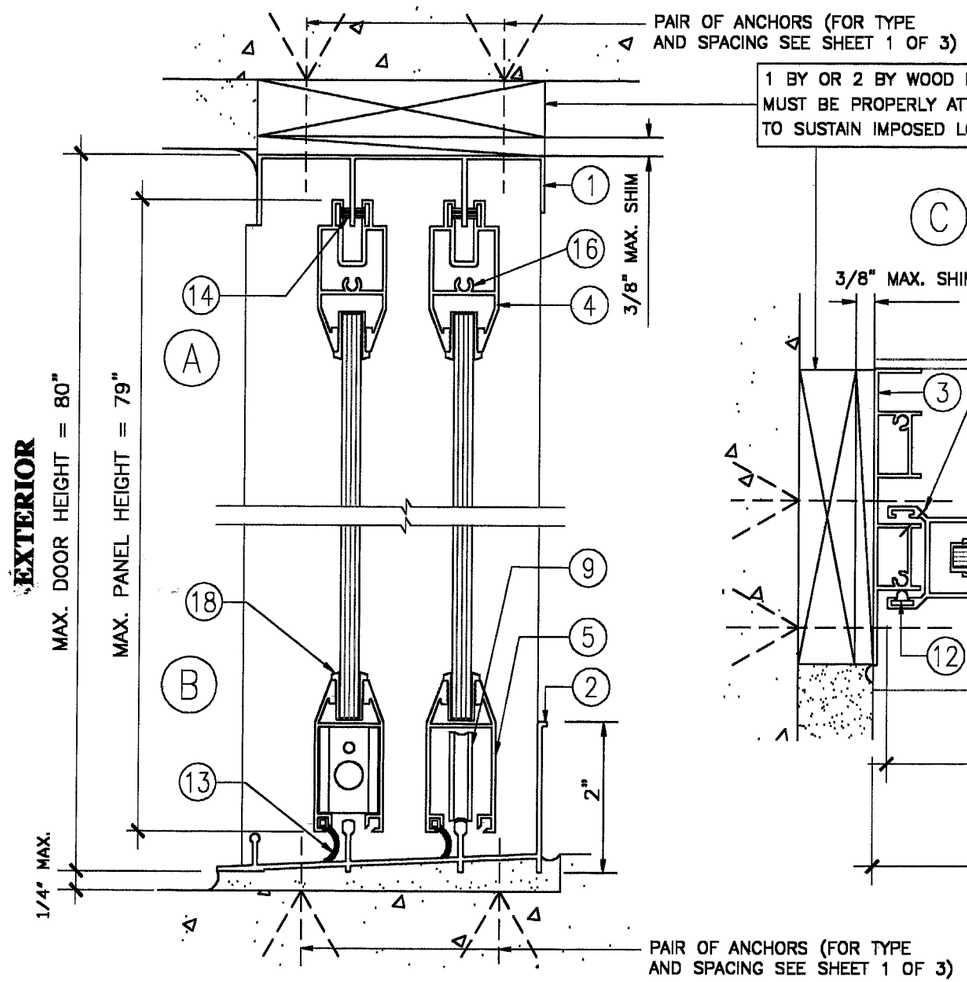

EXTERIOR

VERTICAL SECTION (OX)

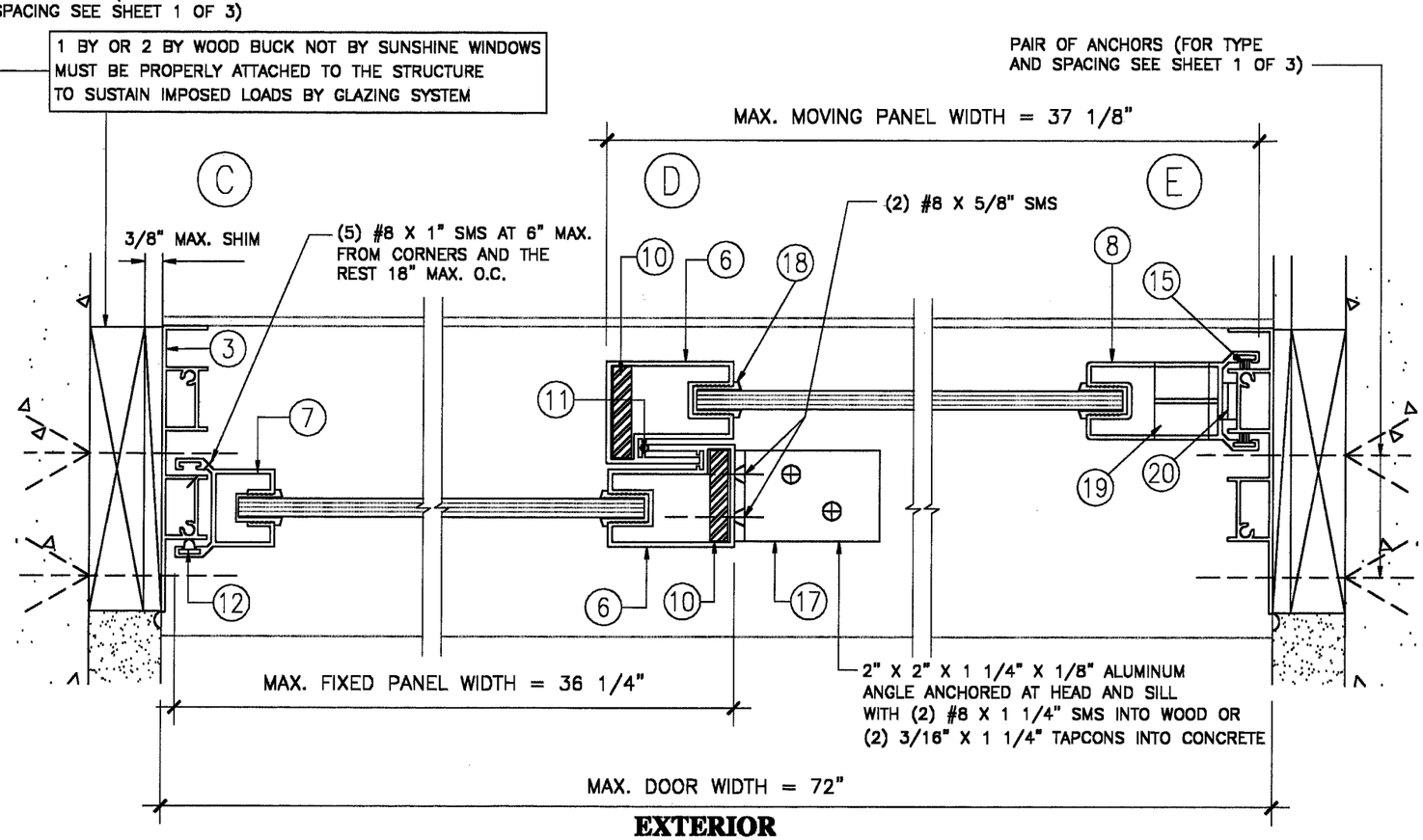

EXTERIOR

HORIZONTAL SECTION (OX)

APPROVED AS COMPLYING WITH THE SOUTH FLORIDA BUILDING CODE
DATE SEPTEMBER 30, 2001
BY Ishay I. Chanda
PRODUCT CONTROL DIVISION
BUILDING CODE COMPLIANCE OFFICE
ACCEPTANCE NO. 01-0112.01

8-12-01
FRANCISCO HERNANDEZ
FL. PE # 51393

Sunshine Windows Manufacturing, Inc.
1745 W. 33rd Place
Hialeah, Florida 33012
Ph: (305)364-9952
Fax:(305)828-5118

FRANCISCO HERNANDEZ P. E.
Structural Engineering
351 NW 82nd AVE #1118
Miami, Florida 33126
Phone (305) 264 7919
Fax (305) 266 3427

SERIES 1600
ALUMINUM SLIDING GLASS DOOR
STANDARD INTERLOCK

Drawn By: JN
Date: 8-12-01
Scale: 1/2"=1"
Revision:
Revision:

DRAWING NO.
SGD00-03

SHEET 2 OF 3

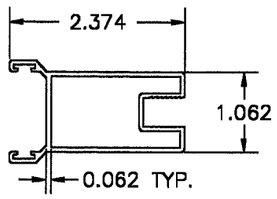

LOCK STILE
SW–006
6063–T5

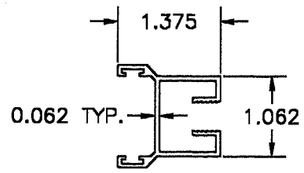

FIXED STILE
SW–007
6063–T5

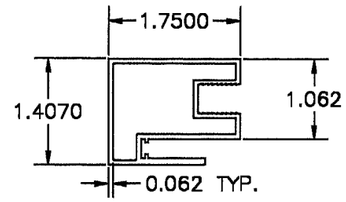

INTERLOCK
SW–091
6063–T5

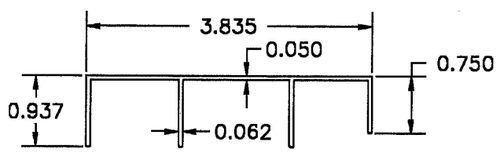

2T HEAD
SW–002
6063–T5

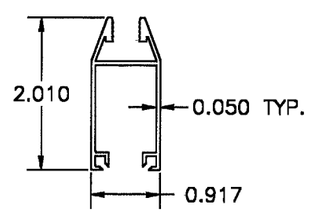

BOTTOM RAIL
SW–004
6063–T5

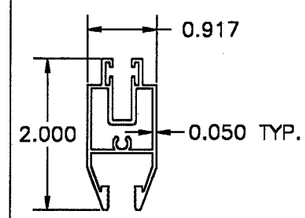

TOP RAIL
SW–005
6063–T5

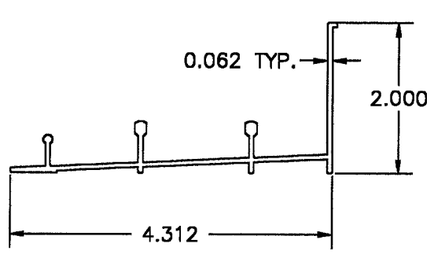

2T SILL
SSW–003
6063–T5

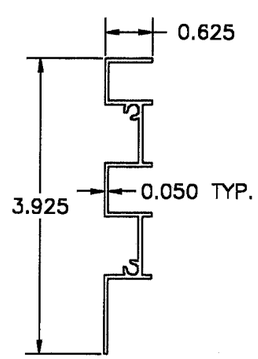

2T JAMB
SW–001
6063–T5

MATERIAL LIST

ITEM #	PART #	REQD.	DESCRIPTION	MATERIAL
1	SW–002	1	2D–2T FRAME HEAD	6063–T5
2	SW–003	1	2D–2T 2" FRAME SILL	6063–T5
3	SW–001	2	2D 2T FRAME JAMB	6063–T5
4	SW–005	2	TOP RAIL	6063–T5
5	SW–004	2	BOTTOM RAIL	6063–T5
6	SW–091	2	INTERLOCK	6063–T5
7	SW–007	1	FIXED STILE	6063–T5
8	SW–006	1	LOCK STILE	6063–T5
9	SW–628	2/MOVING PANEL	ROLLER & HOUSING	STEEL
10	SW–STEEL	1/INTERLOCK	1/4"X1"X74 1/2" LONG	STEEL
11	WV–3257	1/MOV.INTERLOCK	BULB WHEATHER STRIP	VINYL
12	WV–3082	1/FIXED STILE	BULB WHEATHER STRIP	VINYL
13	WV–2227	1/BOTTOM RAIL	FLAP WHEATHER STRIP	VINYL
14	SW–1125	2/TOP RAIL	PILE WEATHER STRIP	POLYPROPYLENE
15	SW–1125	2/LOCK STILE	PILE WEATHER STRIP	POLYPROPYLENE
16	SW–AS	AS REQ'D	#8X1"ASSEMBLY SCREWS	SMS
17	SW–ANGLE	2/FIXED PANEL	2"X 2" X 1 1/4" X1/8"	6063–T5
18	WV–1254	AS REQ'D	GLAZING GASKET	VINYL
19	S–7130	1/MOVING PANEL	HOOK LOCK	ZAMAK # 3
20	S–7130–10	1 AT JAMB	KEEPER	ZAMAK # 3

APPROVED AS COMPLYING WITH THE
SOUTH FLORIDA BUILDING CODE
DATE SEPTEMBER 30, 2001
BY Ishaq I. Chanda
PRODUCT CONTROL DIVISION
BUILDING CODE COMPLIANCE OFFICE
ACCEPTANCE NO. 01-0112.01

8-12-01
FRANCISCO HERNANDEZ
FL. PE # 51393

Sunshine Windows
Manufacturing, Inc.
1745 W. 33rd Place
Hialeah, Florida 33012
Ph: (305)364–9952
Fax:(305)828–5118

FRANCISCO HERNANDEZ P. E.
Structural Engineering
351 NW 82nd AVE #1118
Miami, Florida 33126
Phone (305) 264 7919
Fax (305) 266 3427

SERIES 1600
ALUMINUM SLIDING GLASS DOOR
STANDARD INTERLOCK

Drawn By: JN
Date: 8–12–01
Scale: 1/2"=1"
Revision:
Revision:

DRAWING NO.
SGD00–03

SHEET
3 OF 3