MIAMI-DADE

MIAMI-DADE COUNTY, FLORIDA
METRO-DADE FLAGLER BUILDING

BUILDING CODE COMPLIANCE OFFICE
METRO-DADE FLAGLER BUILDING
140 WEST FLAGLER STREET, SUITE 1603
MIAMI, FLORIDA 33130-1563
(305) 375-2901 FAX (305) 375-2908

CONTRACTOR LICENSING SECTION
(305) 375-2527 FAX (305) 375-2558

CONTRACTOR ENFORCEMENT DIVISION
(305) 375-2966 FAX (305) 375-2908

PRODUCT CONTROL DIVISION
(305) 375-2902 FAX (305) 372-6339

PRODUCT CONTROL NOTICE OF ACCEPTANCE

Ceco Door Products
9159 Telecom Drive
Milan ,TN 38358

Your application for Notice of Acceptance (NOA) of:
Series "Medallion" 6070 18 ga. Outswing Commercial Steel Door - Impact Resistant
under Chapter 8 of the Code of Miami-Dade County governing the use of Alternate Materials and Types of Construction, and completely described herein, has been recommended for acceptance by the Miami-Dade County Building Code Compliance Office (BCCO) under the conditions specified herein.

This NOA shall not be valid after the expiration date stated below. BCCO reserves the right to secure this product or material at any time from a jobsite or manufacturer's plant for quality control testing. If this product or material fails to perform in the approved manner, BCCO may revoke, modify, or suspend the use of such product or material immediately. BCCO reserves the right to revoke this approval, if it is determined by BCCO that this product or material fails to meet the requirements of the South Florida Building Code.

The expense of such testing will be incurred by the manufacturer.

ACCEPTANCE NO.: 01-0118.01
EXPIRES: 09/18/2003

Raul Rodriguez
Chief Product Control Division

THIS IS THE COVERSHEET, SEE ADDITIONAL PAGES FOR SPECIFIC AND GENERAL CONDITIONS
BUILDING CODE & PRODUCT REVIEW COMMITTEE

This application for Product Approval has been reviewed by the BCCO and approved by the Building Code and Product Review Committee to be used in Miami-Dade County, Florida under the conditions set forth above.

Francisco J. Quintana, R.A.
Director
Miami-Dade County
Building Code Compliance Office

APPROVED: 04/26/2001

Ceco Door Products

ACCEPTANCE No.: 01-0118.01

APPROVED : APR 26 2001

EXPIRES : September 18, 2003

NOTICE OF ACCEPTANCE: SPECIFIC CONDITIONS

1. SCOPE

1.1 This **revises** the Notice of Acceptance No. 00-0328.06, which was issued on June 22, 2000. This approves a commercial steel door system, as described in Section 2 of this Notice of Acceptance, designed to comply with the South Florida Building Code (SFBC), 1994 Edition for Miami-Dade County, for the locations where the pressure requirements, as determined by SFBC Chapter 23, do not exceed the Design Pressure Rating values indicated in the approved drawings.

2. PRODUCT DESCRIPTION

2.1 The **Series "Medallion" 6070 18 ga. Outswing Commercial Steel Door - Impact Resistant** and its components shall be constructed in strict compliance with the following documents: Drawing No **RD0089**, titled "6-0 x 7-0 Series," Sheets 1 through 12 of 12, prepared by manufacturer, dated June 12, 1997 and revision D dated on 11/22/00, bearing the Miami-Dade County Product Control approval stamp with the Notice of Acceptance number and approval date by the Miami-Dade County Product Control Division. These documents shall hereinafter be referred to as the approved drawings.

3. LIMITATIONS

3.1 This approval applies to single unit applications of pair of doors and single door only, as shown in approved drawings. Single door units shall include all components described in the active leaf of this approval.

3.3 Installation is limited by the Design Pressure Rating for each hardware option, as shown in approved drawings.

4. INSTALLATION

4.1 The commercial steel door system and its components shall be installed in strict compliance with the approved drawings.

4.2 Hurricane protection system (shutters): the installation of this unit **will not require** a hurricane protection system.

5. LABELING

5.1 Each unit shall bear a permanent label with the manufacturer's name or logo, city, state and following statement: "Miami-Dade County Product Control Approved".

6. BUILDING PERMIT REQUIREMENTS

6.1 Application for building permit shall be accompanied by copies of the following:

6.1.1 This Notice of Acceptance

6.1.2 Duplicate copies of the approved drawings, as identified in Section 2 of this Notice of Acceptance, clearly marked to show the components selected for the proposed installation.

6.1.3 Any other documents required by the Building Official or the South Florida Building Code (SFBC) in order to properly evaluate the installation of this system.

Manuel Perez

Manuel Perez, P.E. Product Control Examiner
Product Control Division

Ceco Door Products

ACCEPTANCE No.: 01-0118.01

APPROVED : APR 26 2001

EXPIRES : September 18, 2003

NOTICE OF ACCEPTANCE: STANDARD CONDITIONS

1. Renewal of this Acceptance (approval) shall be considered after a renewal application has been filed and the original submitted documentation, including test supporting data, engineering documents, are no older than eight (8) years.

2. Any and all approved products shall be permanently labeled with the manufacturer's name, city, state, and the following statement: "Miami-Dade County Product Control Approved", or as specifically stated in the specific conditions of this Acceptance.

3. Renewals of Acceptance will not be considered if:
   a) There has been a change in the South Florida Building Code affecting the evaluation of this product and the product is not in compliance with the code changes;
   b) The product is no longer the same product (identical) as the one originally approved;
   c) If the Acceptance holder has not complied with all the requirements of this acceptance, including the correct installation of the product;
   d) The engineer who originally prepared, signed and sealed the required documentation initially submitted is no longer practicing the engineering profession.

4. Any revision or change in the materials, use, and/or manufacture of the product or process shall automatically be cause for termination of this Acceptance, unless prior written approval has been requested (through the filing of a revision application with appropriate fee) and granted by this office.

5. Any of the following shall also be grounds for removal of this Acceptance:
   a) Unsatisfactory performance of this product or process.
   b) Misuse of this Acceptance as an endorsement of any product, for sales, advertising or any other purpose.

6. The Notice of Acceptance number preceded by the words Miami-Dade County, Florida, and followed by the expiration date may be displayed in advertising literature. If any portion of the Notice of Acceptance is displayed, then it shall be done in its entirety.

7. A copy of this Acceptance as well as approved drawings and other documents, where it applies, shall be provided to the user by the manufacturer or its distributors and shall be available for inspection at the job site at all time. The engineer need not reseal the copies.

8. Failure to comply with any section of this Acceptance shall be cause for termination and removal of Acceptance.

9. This Notice of Acceptance consists of pages 1, 2 and this last page 3.

Manuel Perez

Manuel Perez, P.E. Product Control Examiner
Product Control Division

END OF THIS ACCEPTANCE

Ceco Door Products

ACCEPTANCE No.: . 01-0118.01

APPROVED : APR 26 2001

EXPIRES : September 18, 2003

NOTICE OF ACCEPTANCE: EVIDENCE SUBMITTED

(For File ONLY. Not part of NOA.)

A. DRAWINGS

1. Manufacturer's die drawings and sections.
2. Drawing No **RD0089**, titled "6-0 x 7-0 Series," Sheets 1 through 12 of 12, prepared by manufacturer, dated June 12, 1997 and revision D dated on 11/22/00.

B. TESTS

1 Test reports on: 1) Air Infiltration Test, per PA 202-94
2) Uniform Static Air Pressure Test, Loading per PA 202-94
3) Forced Entry Test, per SFBC 3603.2 (b) and PA 202-94.
4) Large Missile Impact Test, per SFBC, PA 201-94.
5) Cyclic Wind Pressure Loading Test, per SFBC, PA 203-94.

along with installation diagram of a commercial steel door, prepared by Architectural Testing, Inc., Test Report No. **ATI-01-38068.01**, dated November 14, 2000, signed and sealed by Allen N. Reeves, P.E.

2 Test reports on: 1) Air Infiltration Test, per PA 202-94
2) Uniform Static Air Pressure Test, Loading per PA 202-94
3) Forced Entry Test, per SFBC 3603.2 (b) and PA 202-94.
4) Large Missile Impact Test, per SFBC, PA 201-94.
5) Cyclic Wind Pressure Loading Test, per SFBC, PA 203-94.

along with installation diagram of a commercial steel door, prepared by Miami Testing Laboratory, Test Report No. **MTL-16853**, dated November 26, 1996, signed and sealed by R. G. Miller, P.E. **(Submitted under previous approval # 00-0328.06)**

C. MATERIAL CERTIFICATIONS

1 Tensile Test prepared by Center For Applied Engineering, Inc., Report No. 257858, dated November 14, 1996, Revision 1 on May 30, 1997,for steel samples, tested per ASTM E8-93a, signed and sealed by John M. Bridenstine, P.E.

D. CALCULATIONS

1. Anchor calculations prepared by Product & Application Engineering, Inc., Project No.97-0208, Report No. 1, dated November 19, 1996, signed and sealed by David A. Terwilleger, P.E. **(Submitted under previous approval # 00-0328.06)**

Manuel Perez

Manuel Perez, P.E. Product Control Examiner
Product Control Division

Ceco Door Products

ACCEPTANCE No.: 01-0118.01

APPROVED : APR 26 2001

EXPIRES : September 18, 2003

NOTICE OF ACCEPTANCE: EVIDENCE SUBMITTED

(For File ONLY. Not part of NOA.)

E. STATEMENTS

1. Letter from Ceco Door Products, stating that the product has not changed in any shape or form since it was last approved, dated on March 22, 2000, signed by John A. Remaker - Senior Product Design Engineer.
2. Letter from Ceco Door Products, stating that the product engineer s are still in the engineering business, dated on March 22, 2000, signed by John A. Remaker - Senior Product Design Engineer.

F. OTHER

1. This NOA revises NOA No. 97-0310.01,approved on Sept. 18, 1997 and expiring on Sept. 18, 2000.
2. Test performed under original file (#. 97-0310.01):

Manuel Perez, P.E. Product Control Examiner
Product Control Division

Ceco Door Products

ACCEPTANCE No.: 01-0118.01

APPROVED : APR 26 2001

EXPIRES : September 18, 2003

NOTICE OF ACCEPTANCE: EVIDENCE SUBMITTED

(For File ONLY. Not part of NOA.)

Doors with Vertical Rod Exit Device Option.		
TEST	**TEST LOADS**	**DESIGN LOADS**
AIR INFILTRATION @ 1.57 PSF SFBC PA 202-94 (1.25 CFM/FT^2)	0.36 CFM/FT^2 MTL-16853	----------
UNIFORM STATIC PRESSURE @ DESIGN LOAD SFBC PA 202-94 POSITIVE	+45.0 PSF MTL-16853	+45.0 PSF MTL-16853
UNIFORM STATIC PRESSURE @ DESIGN LOAD SFBC PA 202-94 NEGATIVE	-40.0 PSF MTL-16853	-45 PSF MTL-16853
WATER RESISTANCE (PSF) SFBC PA 202-94	NOT TESTED	
UNIFORM STATIC AIR PRESSURE @ FULL TEST LOAD SFBC PA 202-94 POSITIVE	+67.5 PSF MTL-16853	+45.0 PSF MTL-16853
UNIFORM STATIC AIR PRESSURE @ FULL TEST LOAD SFBC PA 202-94 NEGATIVE	-60.0 PSF MTL-16853	-40.0 PSF MTL-16853
FORCED-ENTRY RESISTANCE (FER) SFBC Section 3603.02 and SFBC PA 202-94	SATISFACTORY MTL-16853	----------
LARGE MISSILE IMPACT TEST SFBC PA 201-94	SATISFACTORY MTL-16853	----------
CYCLIC WIND PRESSURE TEST SFBC PA 203-94 POSITIVE (671 cycles)	+58.5 PSF MTL-16853	+45.0 PSF MTL-16853
CYCLIC WIND PRESSURE TEST SFBC PA 203-94 NEGATIVE (671 cycles)	-52.0 PSF MTL-16853	-40.0 PSF MTL-16853
Design Pressure Rating (Positive)		**+45.0 PSF**
Design Pressure Rating (Negative)		**-40.0 PSF**

Doors with Cylindrical Lock and Surface Bolt Option.		
TEST	**TEST LOADS**	**DESIGN LOADS**
AIR INFILTRATION @ 1.57 PSF SFBC PA 202-94 (1.25 CFM/FT^2)	0.35 CFM/FT^2 MTL-16853	----------
UNIFORM STATIC PRESSURE @ DESIGN LOAD SFBC PA 202-94 POSITIVE	+45.0 PSF MTL-16853	+45.0 PSF MTL-16853
UNIFORM STATIC PRESSURE @ DESIGN LOAD SFBC PA 202-94 NEGATIVE	-45.0 PSF MTL-16853	-45 PSF MTL-16853
WATER RESISTANCE (PSF) SFBC PA 202-94	NOT TESTED	
UNIFORM STATIC AIR PRESSURE @ FULL TEST LOAD SFBC PA 202-94 POSITIVE	+67.5 PSF MTL-16853	+45.0 PSF MTL-16853
UNIFORM STATIC AIR PRESSURE @ FULL TEST LOAD SFBC PA 202-94 NEGATIVE	-67.5 PSF MTL-16853	-45.0 PSF MTL-16853
FORCED-ENTRY RESISTANCE (FER) SFBC Section 3603.02 and SFBC PA 202-94	SATISFACTORY MTL-16853	----------
LARGE MISSILE IMPACT TEST SFBC PA 201-94	SATISFACTORY MTL-16853	----------
CYCLIC WIND PRESSURE TEST SFBC PA 203-94 POSITIVE (671 cycles)	+58.5 PSF MTL-16853	+45.0 PSF MTL-16853
CYCLIC WIND PRESSURE TEST SFBC PA 203-94 NEGATIVE (671 cycles)	-58.5 PSF MTL-16853	-45.0 PSF MTL-16853
Design Pressure Rating (Positive)		**+45.0 PSF**
Design Pressure Rating (Negative)		**-45.0 PSF**

Manuel Perez, P.E. Product Control Examiner
Product Control Division

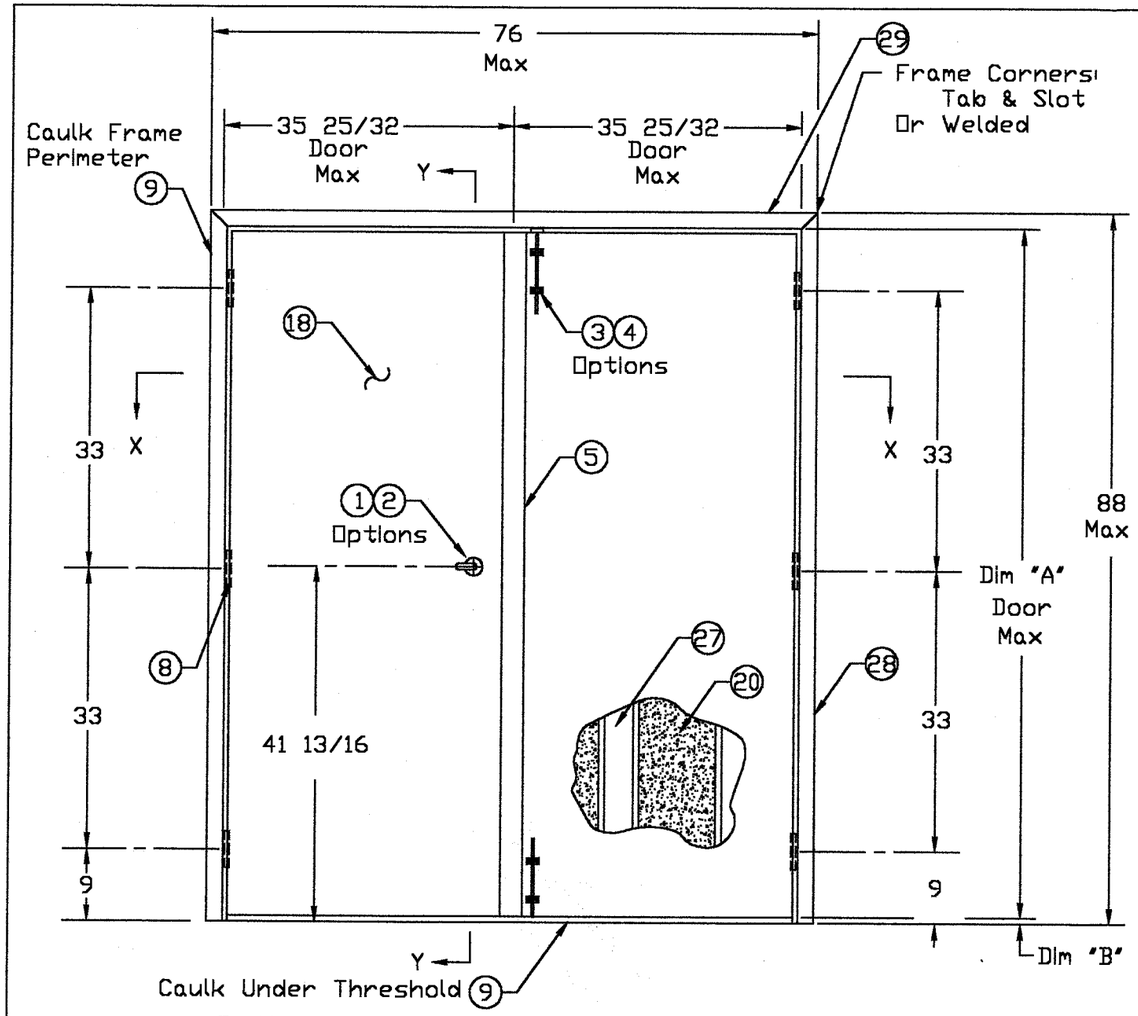

Cylindrical Lock & Surface Bolts

Design Pressure	+45 psf	-45 psf

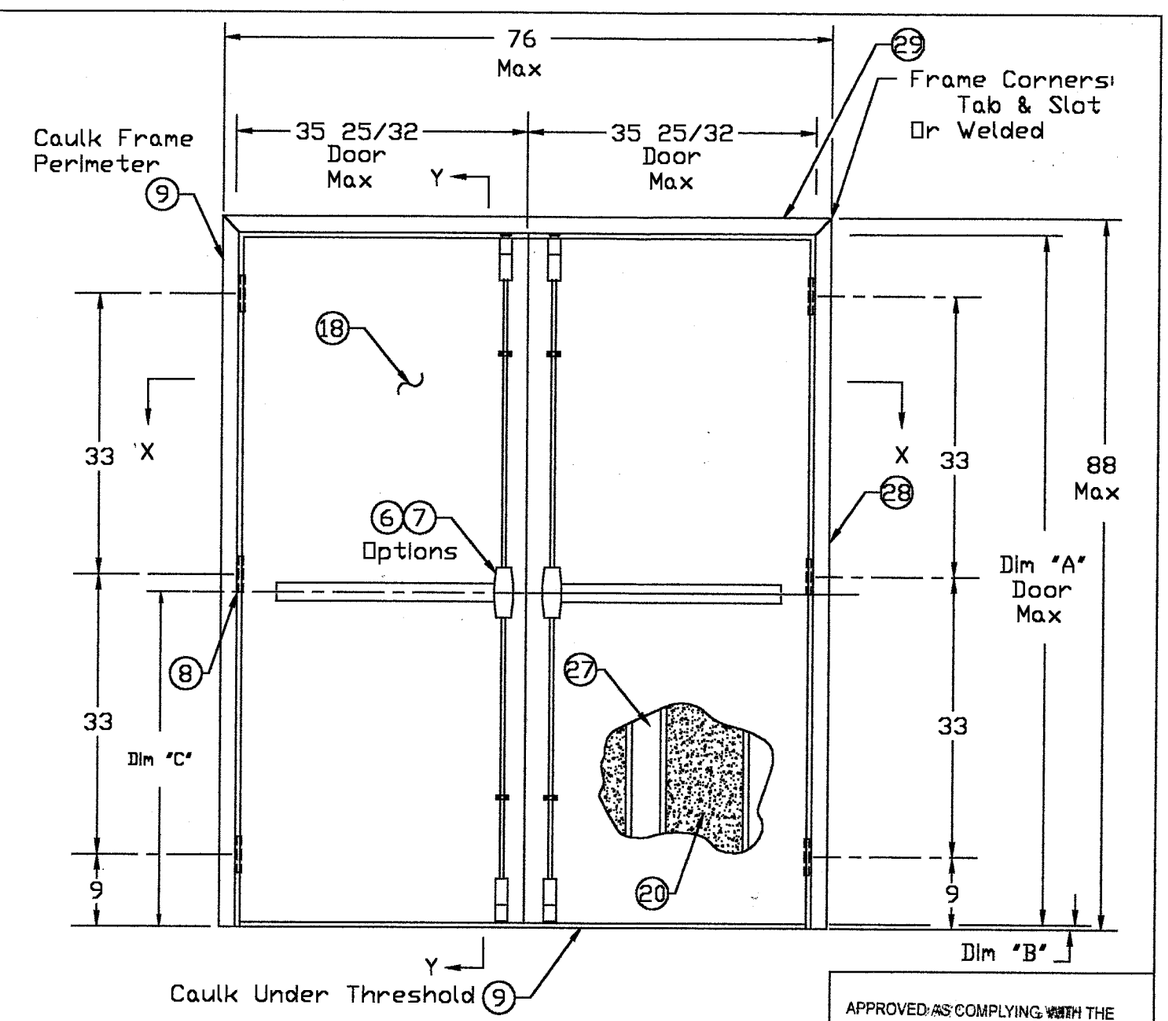

Vertical Rods

Design Pressure	+45 psf	-40 psf

APPROVED AS COMPLYING WITH THE SOUTH FLORIDA BUILDING CODE
DATE APR 26 2001
BY Manuel Perez
PRODUCT CONTROL DIVISION
BUILDING CODE COMPLIANCE OFFICE
ACCEPTANCE NO. 01-0118.01

01-0118.01

Minimum Frame Depth	5-3/4"

	Dim "A"	Dim "B"
3/4" Undercut	83 1/8	3/4
3/8" Undercut	83 1/2	3/8

Lock	Dim "C"
Von Duprin	39 5/8"
Precision	39 15/16"

Sheet 2	Frame Anchor Installation
Sheet 3	Threshold Installation
Sheet 4	Weatherstrip Installation
Sheets 5 & 6	Surface Bolt & Vert Rod
Sheets 7 & 8	Cylindrical Lock Reinforcement
Sheets 9 & 10	Cross Section Door & Frame
Sheets 11 & 12	Bill Of Materials

MATERIAL SPECIFICATIONS:
Finish: Rust Inhibitive Primer
One coat

6-0 x 7-0 Series
Elevation Drawing

CECO DOOR PRODUCTS
Milan, Tennessee 38358

ISSUE	REVISIONS
D 11/22/00 GWS	Revise From 8 Sheets To 12 Sheets Total Remove Reference To Water Penetration
C 5/31/00 JAR	Added Cylindrical Lock and Surface Bolts Pressure ratings
B 3/21/00 JAR	Revised Format, Transfered Information from NOA
A 8/29/97 GWS	Add Comment For Welded Corners Add Comment For Minimum Frame Depth

DRAWN BY: GWS
DATE: 6/12/97
DRAWING NUMBER: RD0089
Sheet 1 Of 12

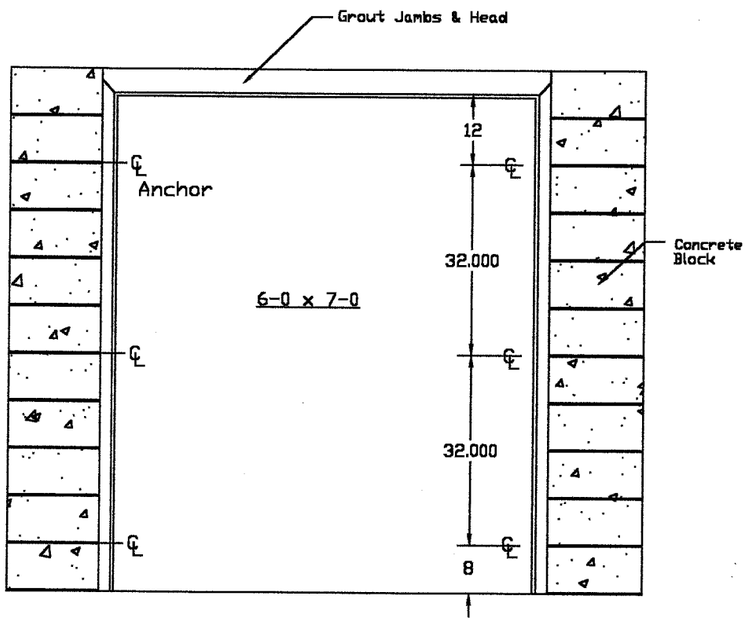

Masonry "T" Anchor

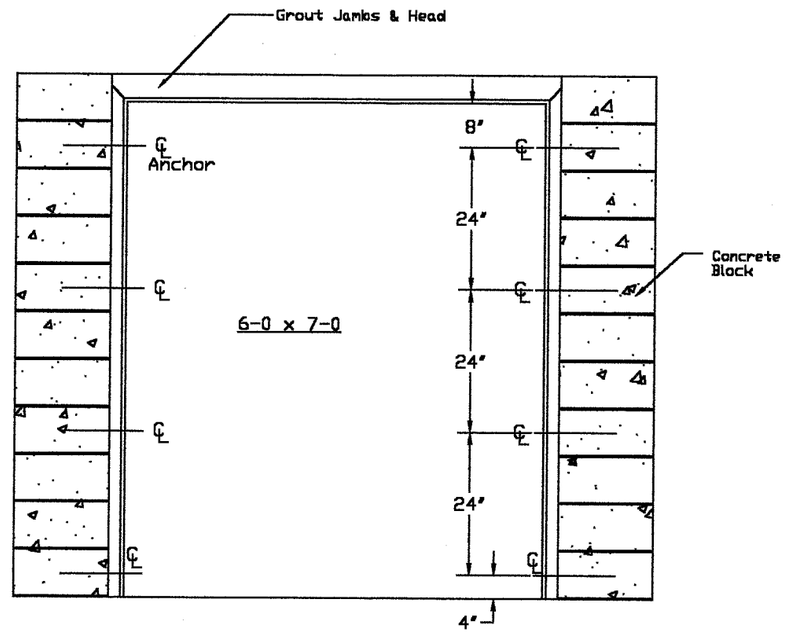

Existing Opening Anchor Into Block

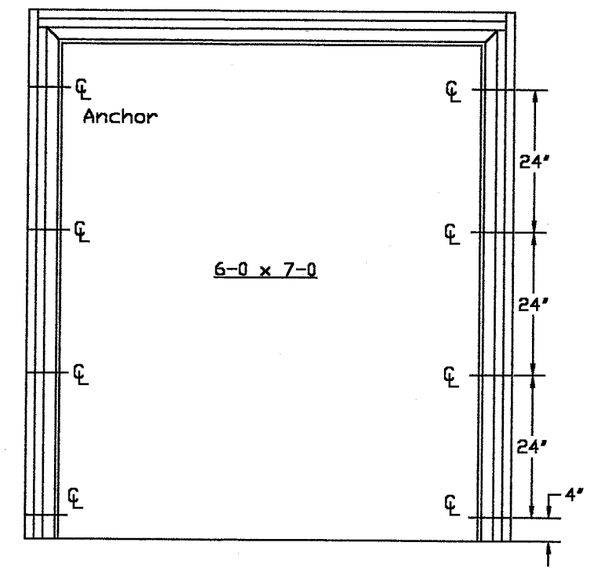

Existing Opening Anchor Into Wood Stud

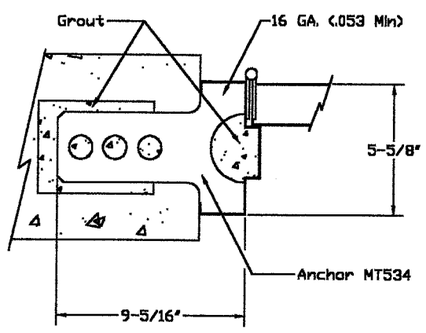

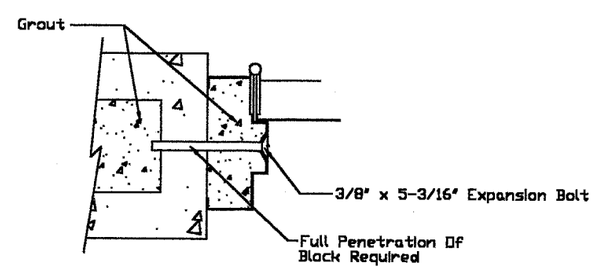

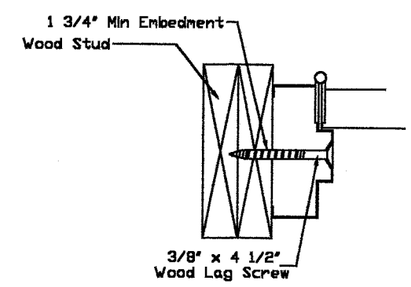

APPROVED AS COMPLYING WITH THE SOUTH FLORIDA BUILDING CODE
DATE APR 26 2001
BY Manuel Perez
PRODUCT CONTROL DIVISION
BUILDING CODE COMPLIANCE OFFICE
ACCEPTANCE NO. 01-0118.01

ISSUE	REVISIONS
B 11/22/00 GWS	Revised From 8 Sheets To 12 Sheets Total
A 3/21/00 JAR	Revised Format, Transfered Information from NOA

MATERIAL SPECIFICATIONS:

Frame Anchor Installation Details

CECO DOOR PRODUCTS
Milan, Tennessee 38358

DRAWN BY: GWS
DATE: 6/12/97

DRAWING NUMBER: RD0089

Sheet 2 Of 12

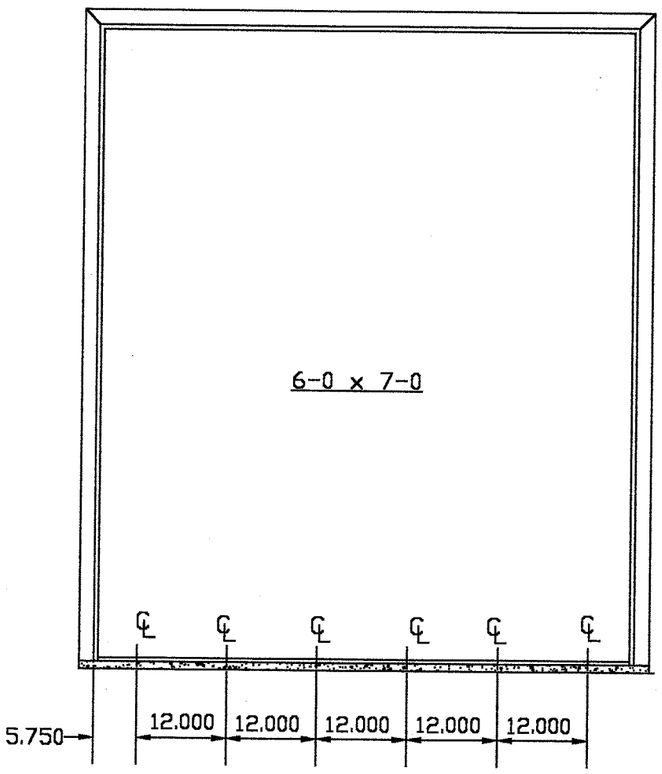

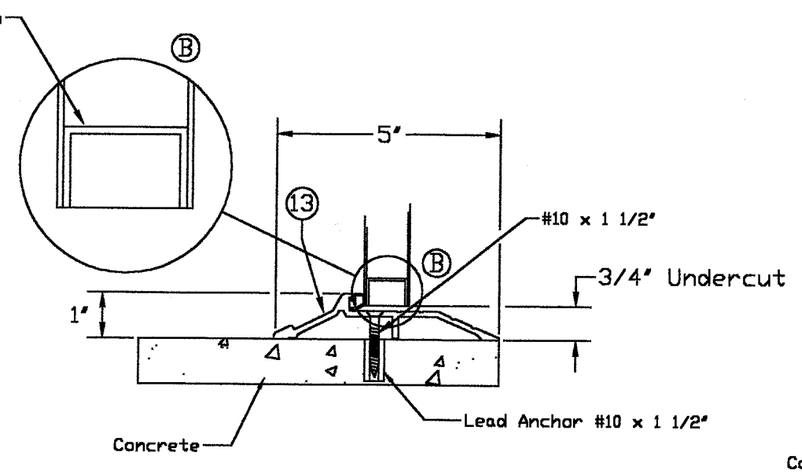

Threshold: Pemko 181AV

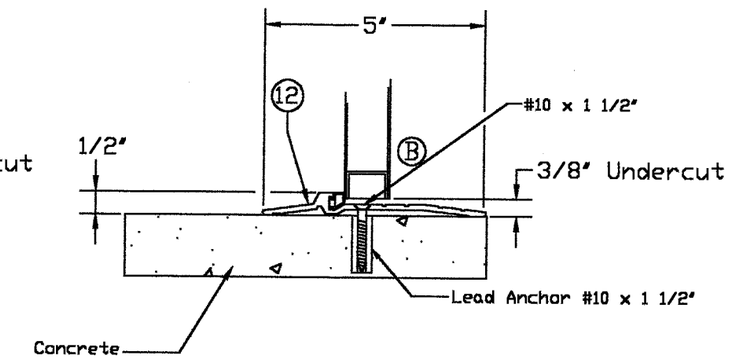

Threshold: Pemko 2005AV

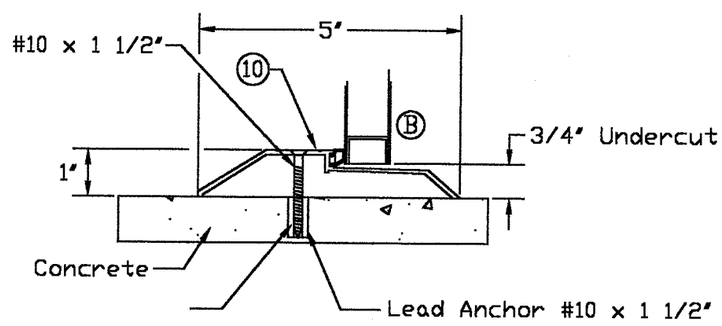

Threshold: National Guard 803S

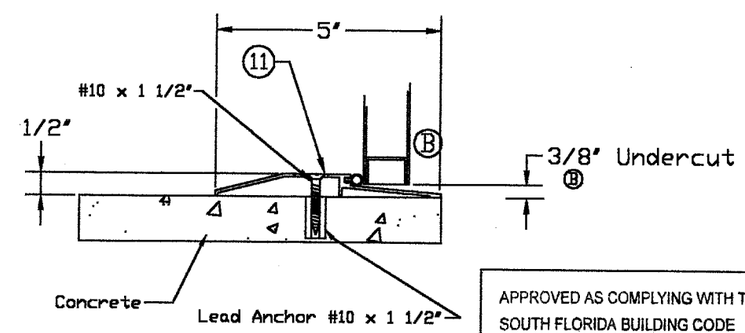

Threshold: National Guard 950S

Note: All thresholds shown are made from extruded aluminum with slide-in vinyl weather strip.

APPROVED AS COMPLYING WITH THE SOUTH FLORIDA BUILDING CODE
DATE APR 26 2001
BY Manuel Perez
PRODUCT CONTROL DIVISION
BUILDING CODE COMPLIANCE OFFICE
ACCEPTANCE NO. 01-0118.01

ISSUE	REVISIONS
B 11/22/00 GWS	Bottom Channel Was Incorrectly Drawn Flush With Bottom Of Door. 3/8" Was Incorrectly Noted As 3/4"
A 3/21/00 JAR	Revised Format, Transfered Information from NOA

MATERIAL SPECIFICATIONS:

Threshold Installation Details

CECO DOOR PRODUCTS
Milan, Tennessee 38358

DRAWN BY: GWS
DATE: 6/12/97
DRAWING NUMBER: RD0089
Sheet 3 Of 12

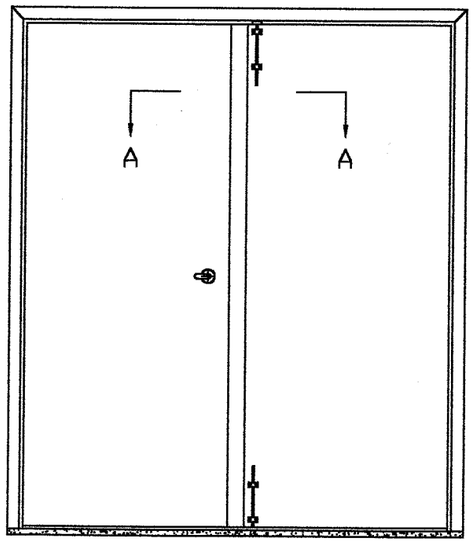

Cylindrical Lock & Surface Bolt

Both Required With Cylindrical Lock & Surface Bolts (See note #1)

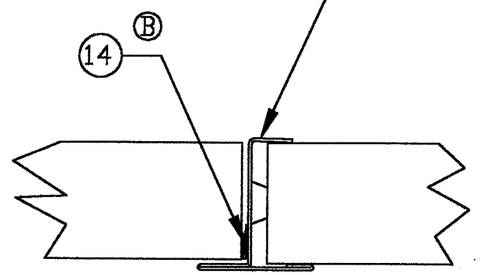

SECTION A-A

Note:

1. Astragal located at lock edge of inactive door panel attached to door edge with ten (10) #10 x 1/2" UCFN SMS spaced at 1" from ends and the rest at 12" o.c. max.

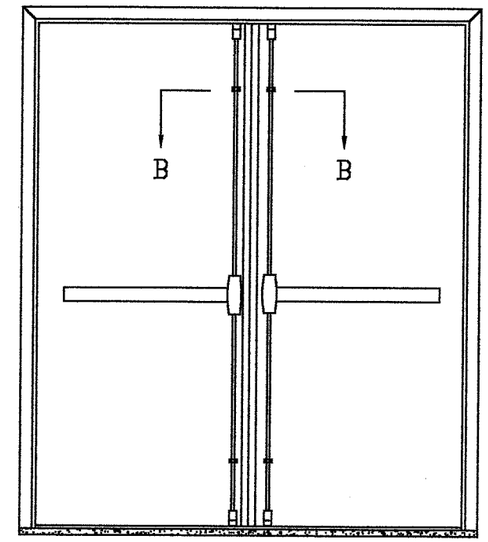

Vertical Rod

Required With Vertical Rods

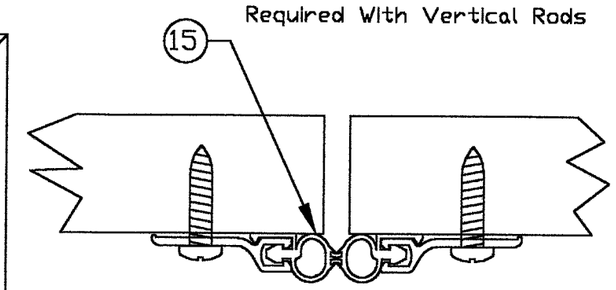

SECTION B-B

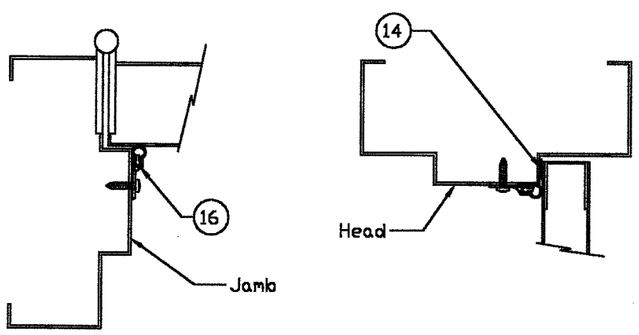

Jamb Weatherstrip: Option 1

Weather Strip Pemko 303AS or National Guard 130NA

Note:

2. Weather strip is located along entire interior lock edge of each active and inactive door panels. Each attached with thirtyfour (34) #8 1 3/4" PPH SMS spaced at 6" o.c.

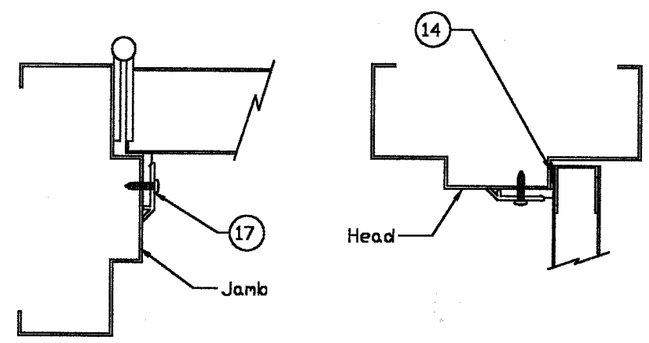

Jamb Weatherstrip: Option 2

APPROVED AS COMPLYING WITH THE SOUTH FLORIDA BUILDING CODE
DATE APR 26 2001
BY Manuel Perez
PRODUCT CONTROL DIVISION
BUILDING CODE COMPLIANCE OFFICE
ACCEPTANCE NO. 01-0118.01

B 11/22/00 GWS	Reoriented Weatherstrip Per Vendor's Instructions.
A 3/20/00 JAR	Revised Format. Tranferred Information From NOA

MATERIAL SPECIFICATIONS:

Weatherstrip Installation Details

CECO DOOR PRODUCTS
Milan, Tennessee 38358

ISSUE REVISIONS

DRAWN BY: GWS
DATE: 6/12/97

DRAWING NUMBER: RD0089
Sheet 4 Of 12

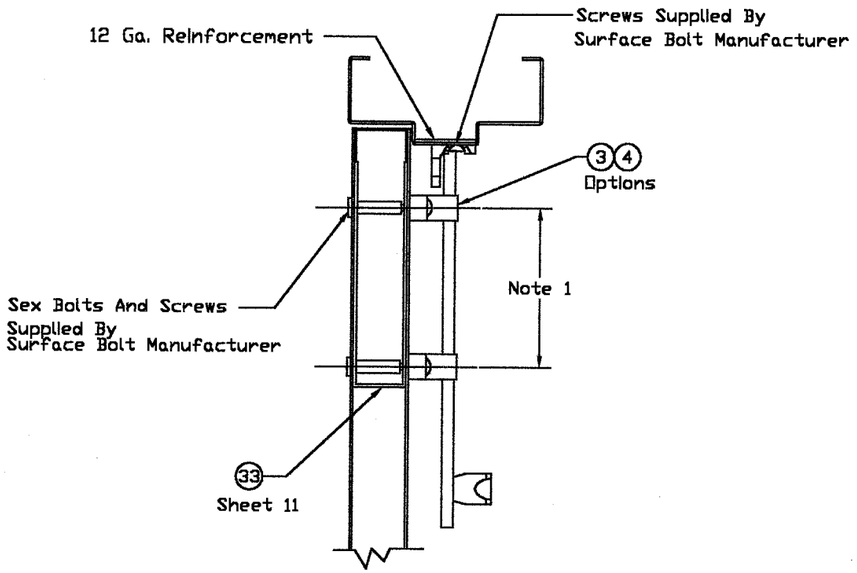

Surface Bolt Top Latch

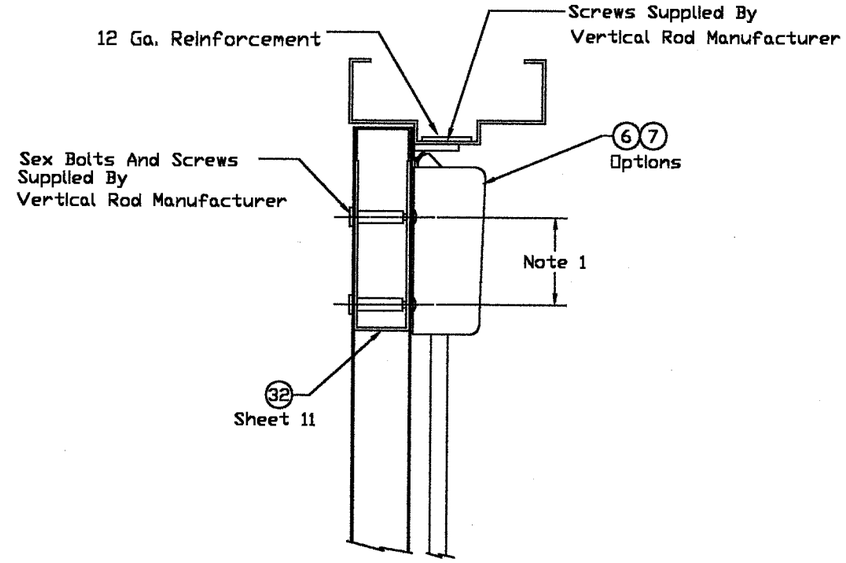

Vertical Rod Top Latch

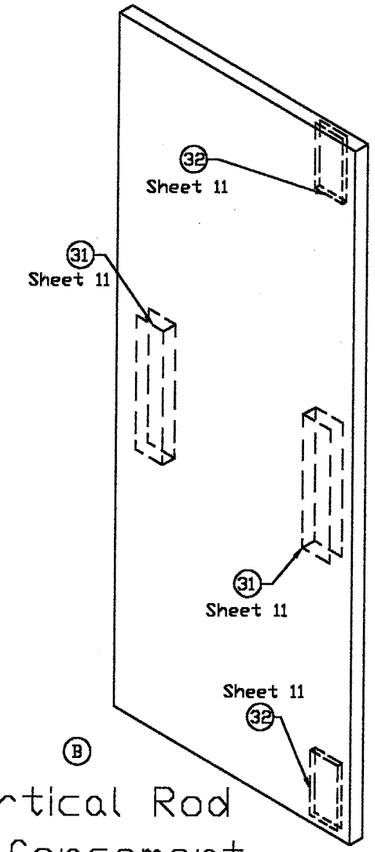

B

Vertical Rod Reinforcement

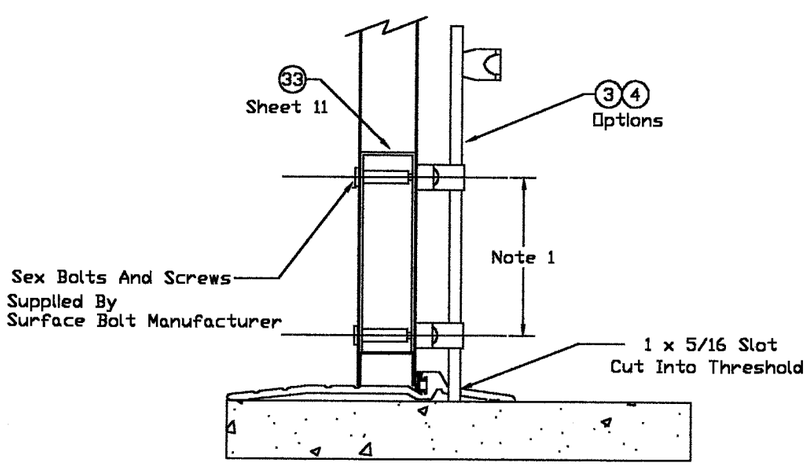

Surface Bolt Bottom Latch

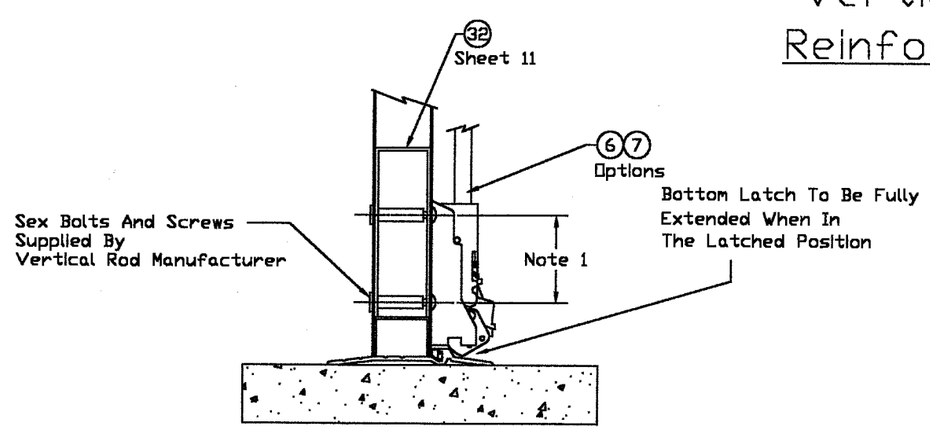

Vertical Rod Bottom Latch

Note 1. Follow Manufacturer's Installation Instructions

APPROVED AS COMPLYING WITH THE
SOUTH FLORIDA BUILDING CODE
DATE APR 26 2001
BY [signature]
PRODUCT CONTROL DIVISION
BUILDING CODE COMPLIANCE OFFICE
ACCEPTANCE NO. 01-0118.01

ISSUE	REVISIONS
B 11/22/00 GWS	Add Detail For Vertical Rod Reinforcement
A 3/21/00 JAR	Revised Format, Transfered Information from NOA

MATERIAL SPECIFICATIONS:

Surface Bolt & Vertical Rod Installation Details

CECO DOOR PRODUCTS
Milan, Tennessee 38358

DRAWN BY: GWS
DATE: 6/12/97

DRAWING NUMBER: RD0089
Sheet 5 Of 12

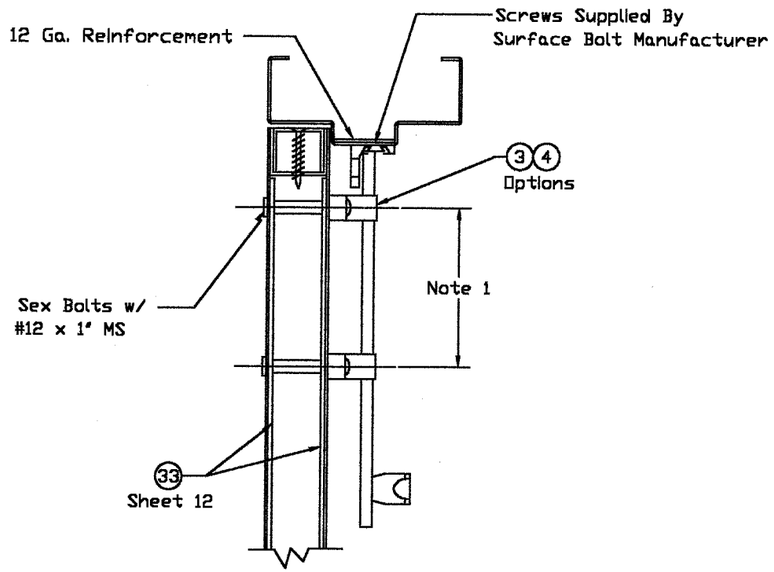

Surface Bolt Top Latch

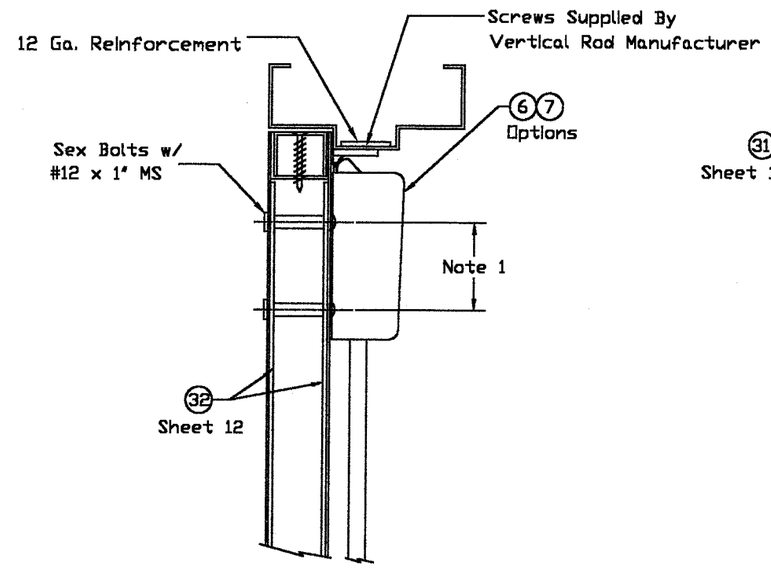

Vertical Rod Top Latch

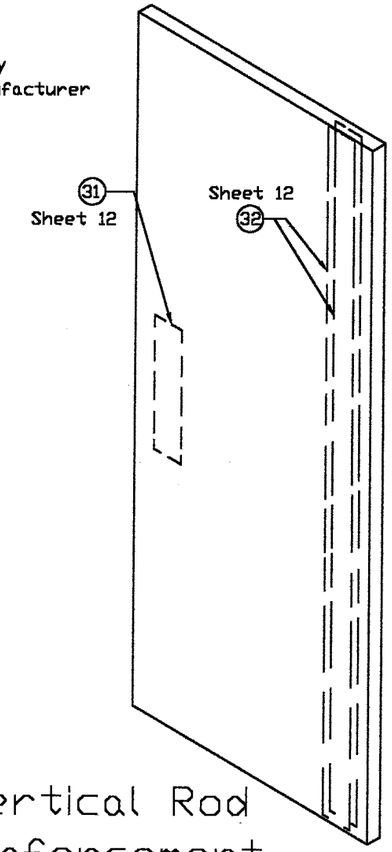

Vertical Rod Reinforcement

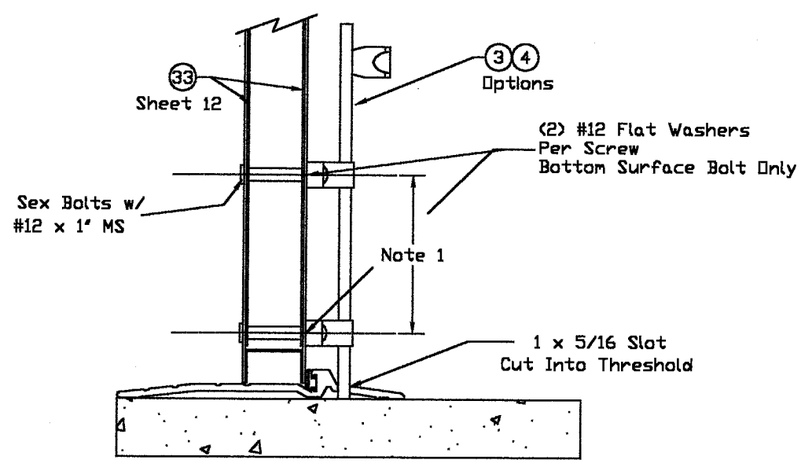

Surface Bolt Bottom Latch

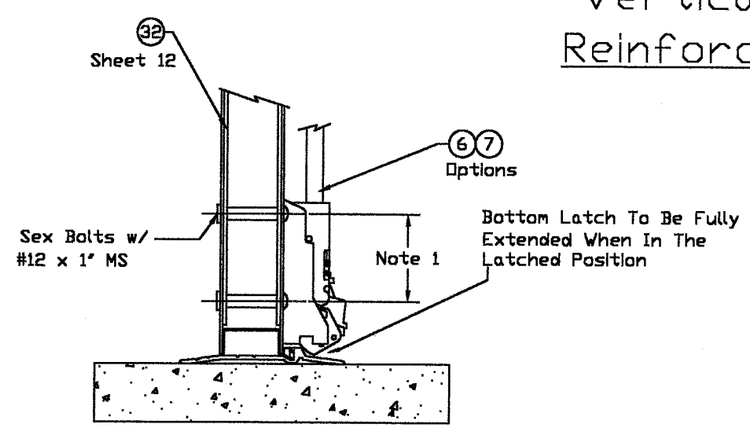

Vertical Rod Bottom Latch

Note 1. Follow Manufacturer's Installation Instructions

APPROVED AS COMPLYING WITH THE
SOUTH FLORIDA BUILDING CODE
DATE APR 26 2001
BY
PRODUCT CONTROL DIVISION
BUILDING CODE COMPLIANCE OFFICE
ACCEPTANCE NO. 01-0118.01

ISSUE	REVISIONS
A 11/22/00 GWS	Add Sheet To Show Alternative Center Seam Design

MATERIAL SPECIFICATIONS:

Alternative Center Seam Design
Surface Bolt & Vertical Rod
Installation Details

CECO DOOR PRODUCTS
Milan, Tennessee 38358

DRAWN BY: GWS
DATE: 11/22/00
DRAWING NUMBER: RD0089
Sheet 6 Of 12

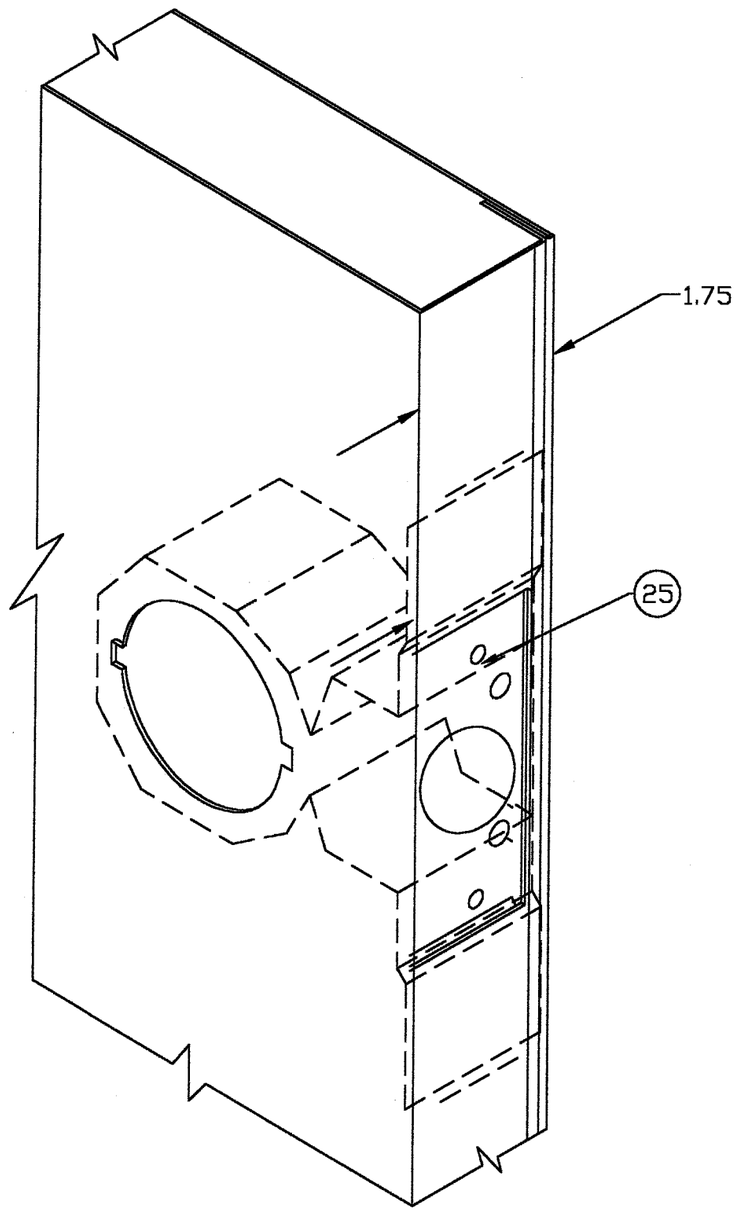

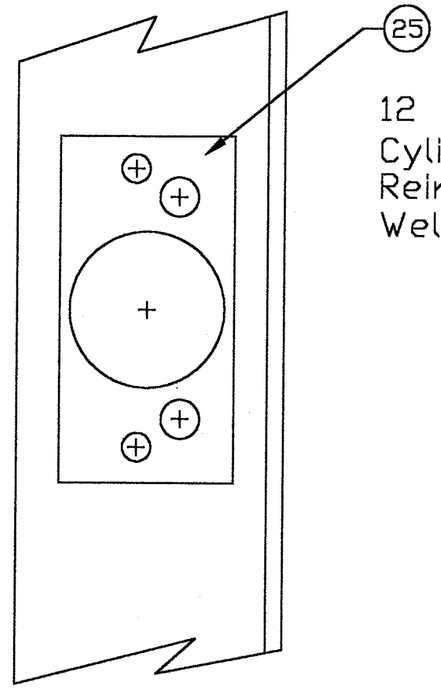

12 Ga (.093 min)
Cylindrical Lock
Reinforcement
Welded In Edge Of Door

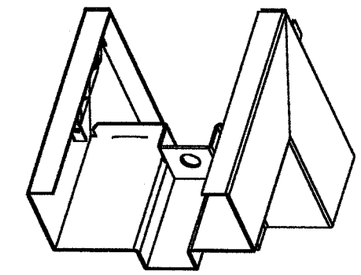

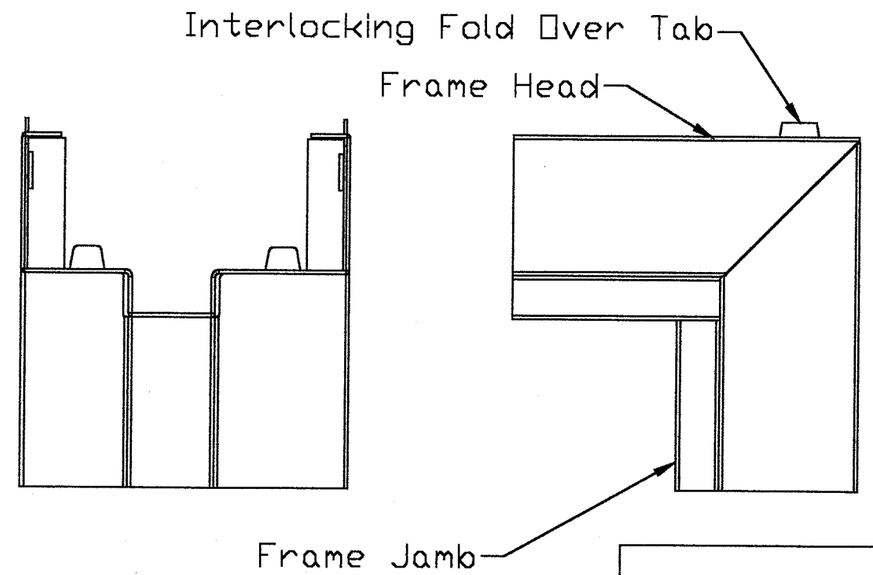

APPROVED AS COMPLYING WITH THE
SOUTH FLORIDA BUILDING CODE
DATE APR 26 2001
BY Manuel Perez
PRODUCT CONTROL DIVISION
BUILDING CODE COMPLIANCE OFFICE
ACCEPTANCE NO. 01-0118.01

ISSUE	REVISIONS
B 11/22/00 GWS	Was Previously Listed As Sheet 6. Revised Latch Reinforcement From 16 Ga To 12 Ga Delete "C" Ring Reinforcement (Item 24)
A 3/21/00 JAR	Revised Format, Transfered Information from NOA

MATERIAL SPECIFICATIONS:

Cylindrical Lock Reinforcement and "SF" Series Frame Corner Installation Details

CECO DOOR PRODUCTS
Milan, Tennessee 38358

DRAWN BY: GWS
DATE: 6/12/97

DRAWING NUMBER: RD0089
Sheet 7 of 12

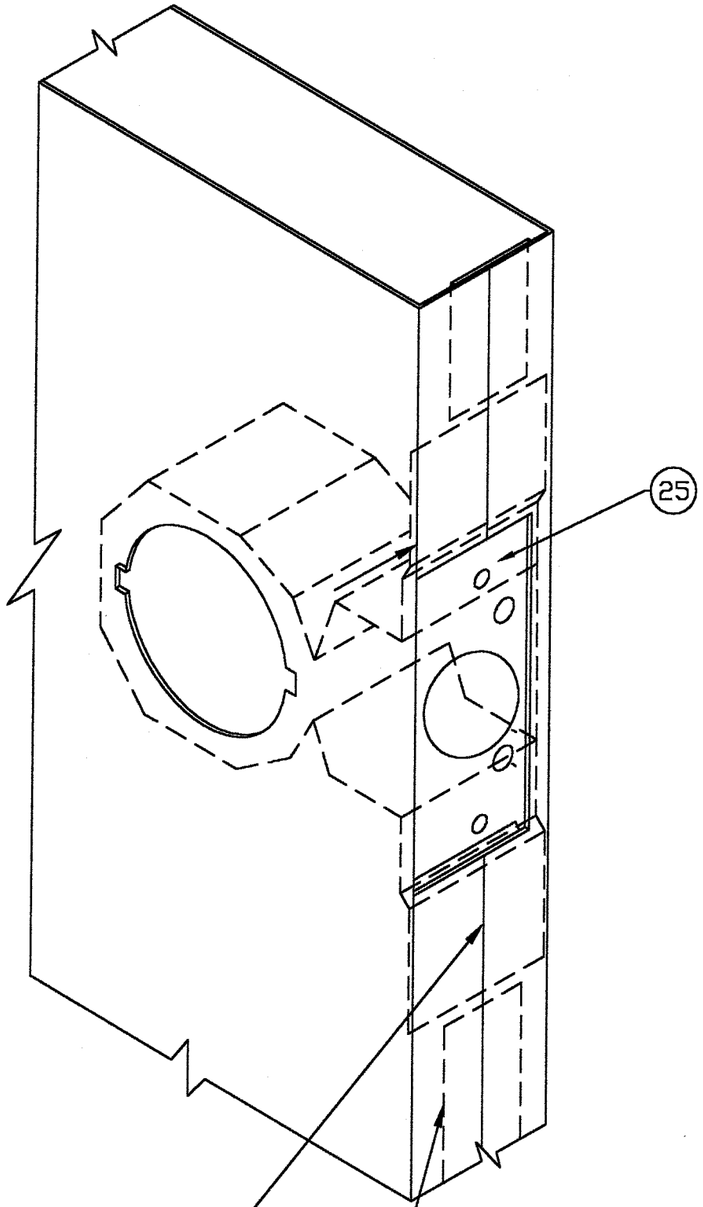

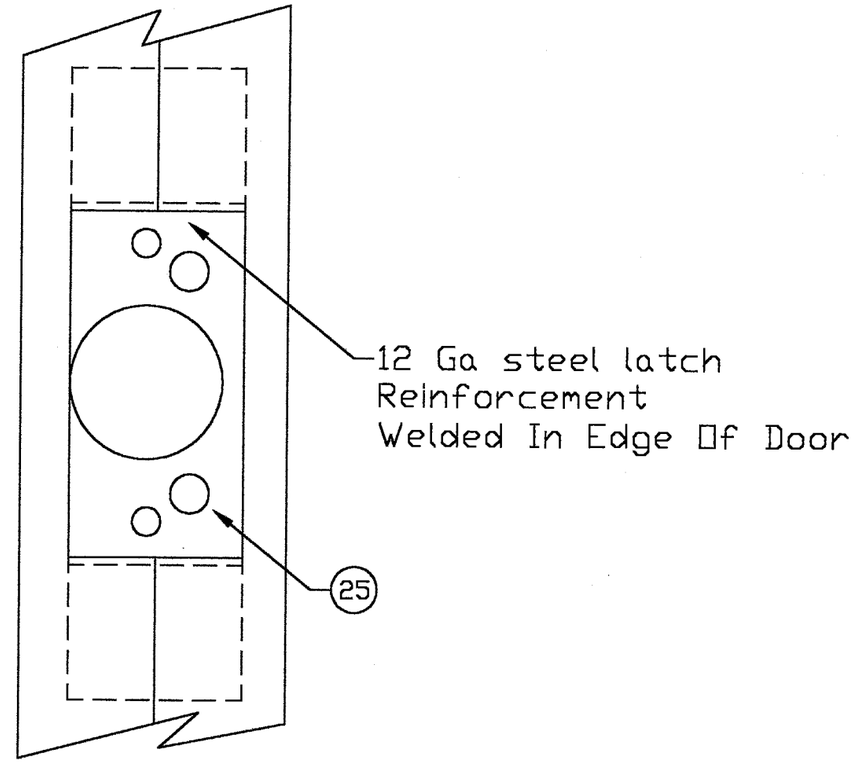

APPROVED AS COMPLYING WITH THE
SOUTH FLORIDA BUILDING CODE
DATE APR 26 2001
BY Maurice Cruz
PRODUCT CONTROL DIVISION
BUILDING CODE COMPLIANCE OFFICE
ACCEPTANCE NO. 01-0118.01

ISSUE	REVISIONS
A 11/22/00 GWS	Add Sheet To Show Alternative Center Seam Design

MATERIAL SPECIFICATIONS:

Alternative Center Edge Seam
Cylindrical Lock Detail

CECO DOOR PRODUCTS
Milan, Tennessee 38358

DRAWN BY:	DATE:
GWS	11/22/00

DRAWING NUMBER:
RD0089
Sheet 8 of 12

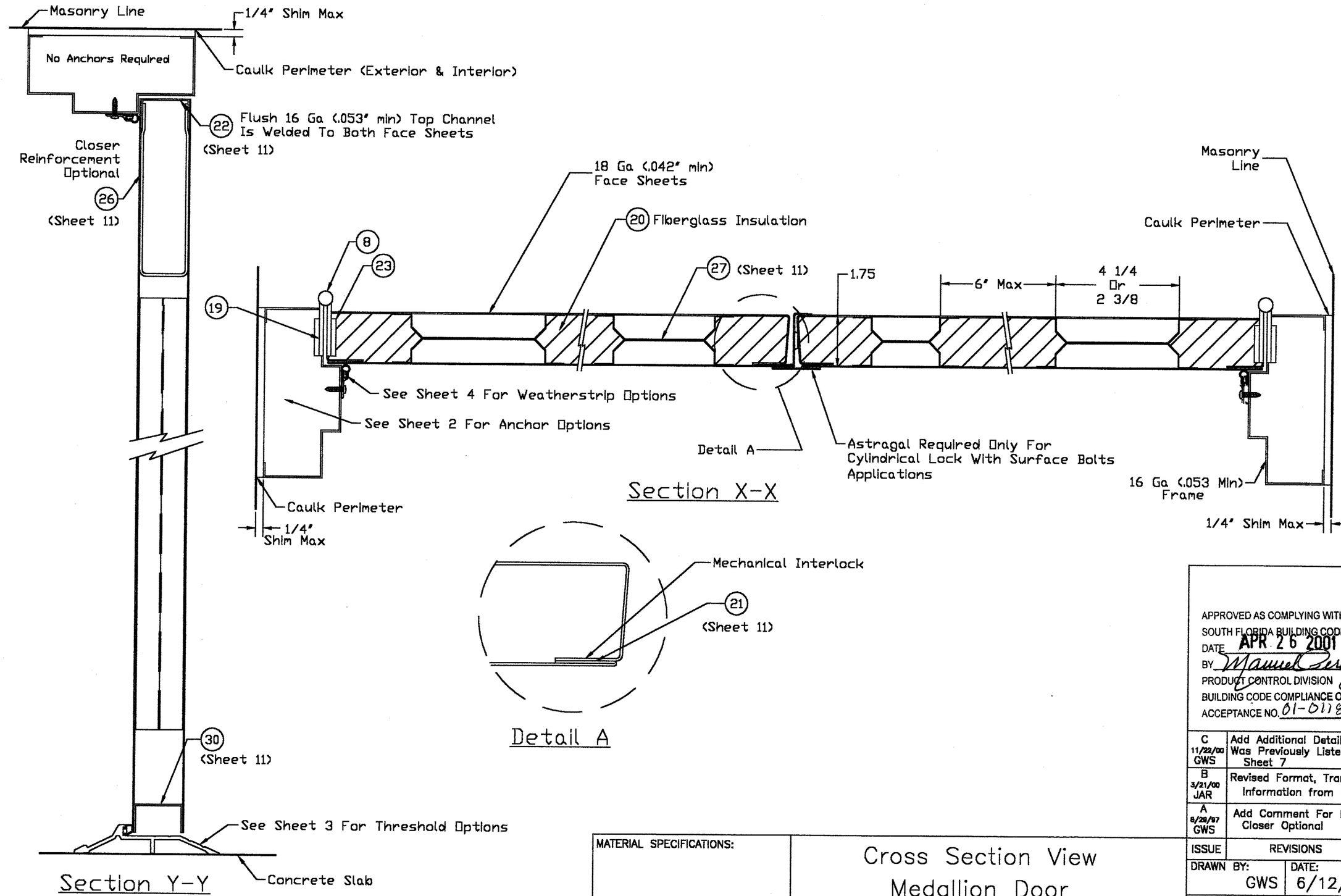

APPROVED AS COMPLYING WITH THE SOUTH FLORIDA BUILDING CODE
DATE APR 26 2001
BY Manuel Perez
PRODUCT CONTROL DIVISION
BUILDING CODE COMPLIANCE OFFICE
ACCEPTANCE NO. 01-0118.01

C 11/22/00 GWS	Add Additional Details. Was Previously Listed As Sheet 7
B 3/21/00 JAR	Revised Format, Transferred Information from NOA
A 8/28/97 GWS	Add Comment For Door Closer Optional
ISSUE	REVISIONS

MATERIAL SPECIFICATIONS:

Cross Section View
Medallion Door

CECO DOOR PRODUCTS
Milan, Tennessee 38358

DRAWN BY: GWS
DATE: 6/12/97
DRAWING NUMBER: RD0089
Sheet 9 of 12

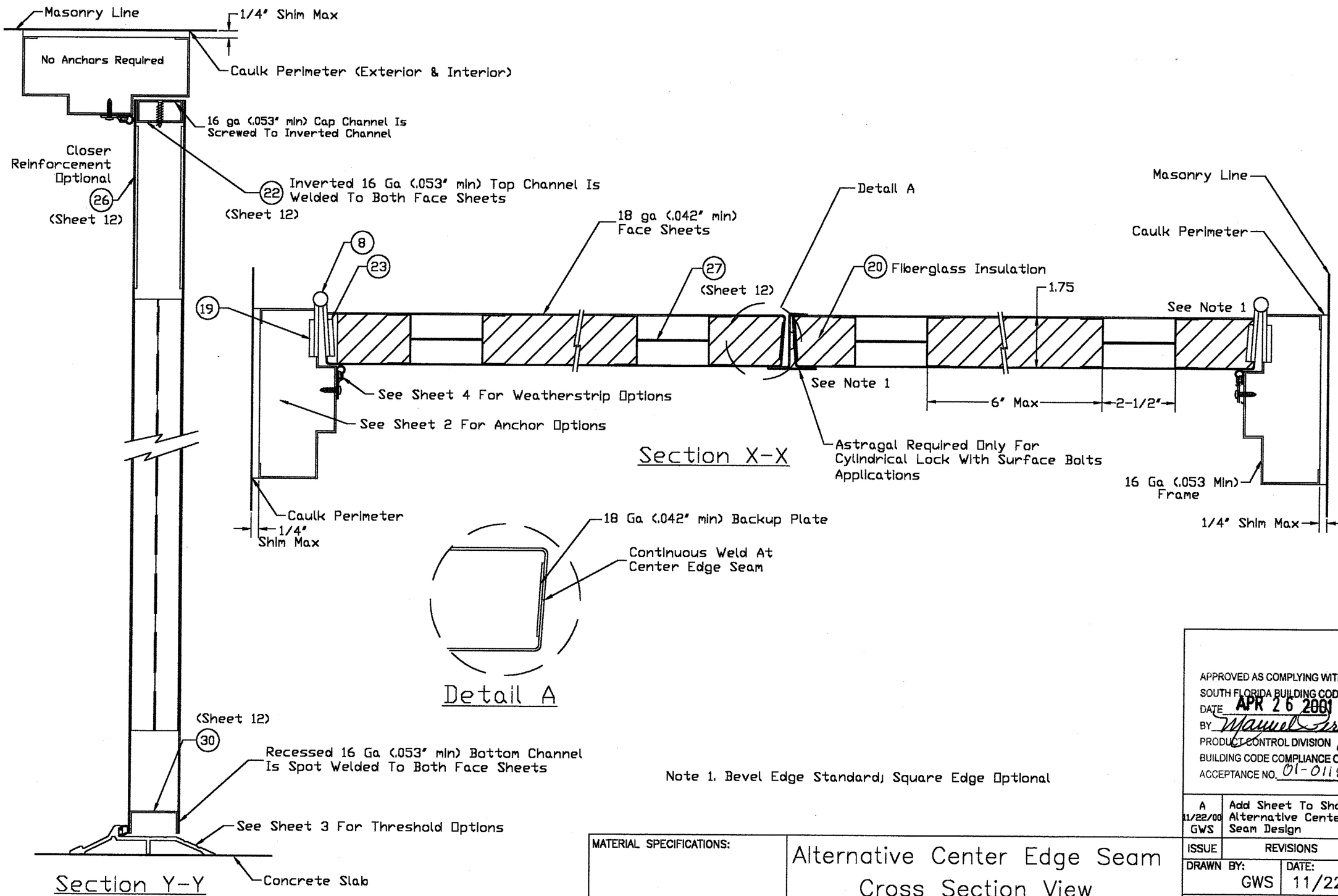

Note 1. Bevel Edge Standard; Square Edge Optional

APPROVED AS COMPLYING WITH THE SOUTH FLORIDA BUILDING CODE
DATE APR 26 2001
BY Manuel Gomez
PRODUCT CONTROL DIVISION
BUILDING CODE COMPLIANCE OFFICE
ACCEPTANCE NO. 01-0118.01

ISSUE	REVISIONS
A 11/22/00 GWS	Add Sheet To Show Alternative Center Seam Design

MATERIAL SPECIFICATIONS:

Alternative Center Edge Seam Cross Section View

CECO DOOR PRODUCTS
Milan, Tennessee 38358

DRAWN BY: GWS
DATE: 11/22/00
DRAWING NUMBER: RD0089
Sheet 10 of 12

ITEM	QTY	DESCRIPTION	MATERIAL	SIZE
1	1	SCHLAGE SERIES AL53PD GRADE 2, LATCH LOCK, SINGLE LEVER OR KNOB OPERATED		
OR				
2	1	MARKS SERIES 170AB/26D-C GRADE 2, LATCH LOCK, INSIDE/ OUTSIDE LEVER OPERATED		
AND				
3	2	HAGER 275D STEEL SURFACE BOLTS, ONE AT THE TOP AND BOTTOM OF THE INACTIVE PANEL LOCK SIDE ATTACHED WITH FOUR #10-24 SEX BOLTS		1/4" THICK X 3/4" WIDE X 8" LONG X 1-3/16" THROW
OR				
4	2	IVES 453F STEEL SURFACE BOLTS, ONE AT THE TOP AND BOTTOM OF THE INACTIVE PANEL LOCK SIDE ATTACHED WITH FOUR #10-24 SEX BOLTS		1/4" THICK X 3/4" WIDE X 8" LONG X 1-3/16" THROW
5	1	CECO A4471/70, FORMED ASTRAGAL	STEEL	1-5/8" WIDE X 1-3/4" DEEP X 18 GA (.042 MIN)
6	2	VON DUPRIN SERIES 9927 SURFACE MOUNTED VERTICAL ROD DEVICE, WITH EXTERIOR CYLINDER, SINGLE LEVER AS KNOB OPERATED		
OR				
7	2	PRECISION SERIES 1208 X 9L SURFACE MOUNTED VERTICAL ROD DEVICE, WITH 5/8" THROW LATCH BOLT, DEAD LOCKING WITH EXTERIOR CYLINDER, SINGLE LEVER AS KNOB OPERATED		
8	6	HAGAR BB1279, 4-1/2" X 4-1/2" X .134" THICK STEEL HINGE EACH ATTACHED WITH EIGHT #12-24 X 1/2" FH MS		
9		General Electric Caulk For Weatherstrip Screws, Frame Perimeter, Frame Sill Corners And Under Sill		Silicone Rubber General Household
10	1	NATIONAL GUARD #803S 72 THRESHOLD		
OR				
11	1	NATIONAL GUARD #950S 72 THRESHOLD		
OR				
12	1	PEMKO #2005AV 72 THRESHOLD		
OR				
13	1	PEMKO #181AV 72 THRESHOLD		
14		PEMKO WEATHERSTRIP S88 (USE WITH CYLINDRICAL LOCK AND SURFACE BOLTS		
15	1 ROW	PEMKO 303AS84/2 WEATHERSTRIP (USE WITH VERTICAL RODS)		
16	1 ROW	PEMKO #303AS7284 SURFACE APPLIED EXTRUDED ALUMINUM WEATHERSTRIP ADAPTER WITH A SILICON (TM) BULB INSERT		
17	1 ROW	NATIONAL GUARD #130NA 1-1/4" WIDE X 0.188" SURFACE APPLIED EXTRUDED ALUMINUM WEATHERSTRIP ADAPT. WITH A FOAM INSERT		
18	2 PER	FACE SHEET CONFORMING TO ASTM A366 AND ASTM A568	COMMERCIAL QUALITY COLD ROLLED STEEL (MINIMUM YEILD STR. OF Fy=36,000 psi)	18 GAUGE (.042" MIN. THICK)
19	6	HINGE REINFORCING PLATE. PLATE SPOT WELDED TO FRAME JAMB AT EACH HINGE LOCATION	STEEL	1-1/4" X 9" X 7 GA.
20		FIBERGLASS INSULATION		
21		DENFLEX 3500 STRUCTURAL ADHESIVE EPOXY		
22	2	ROLL FORMED STEEL CHANNEL ON THE TOP OF BOTH DOORS SPOT WELDED TO EXTERIOR AND INTERIOR SKINS		1" X 1-3/4" X 1" X 16 GA. (.053" MIN)
23	6	DOOR HINGE REINFORCEMENT		1 1-4" X 9" X 7 GA.
24				
25	1	DOOR LOCK REINFORCEMENT	STEEL	12 GA. (.093" MIN)
26	2	CLOSER REINFORCEMENT AT EACH CLOSER LOCATION AT TOP OF BOTH DOOR PANELS (OPTIONAL)	STEEL	6.314 HIGH X 1-3/4" X 12 GA (.093 MIN) CHANNEL
27		VERTICAL STEEL STIFFENED HAT SECTION SPOT WELDED TO	STEEL	22 GA (.026" MIN)
28	2	SERIES "SF", FRAME JAMB, DOUBLE RABBET PROFILE FACE SHEET COMFORMING TO ASTM266 AND ASTM A653	16 GA. (.053 MIN.) STEEL COMMERCIAL QUALITY COLD ROLLED STEEL (MINIMUM YEILD STR. OF Fy=36,000 psi)	2" FACE, 5-3/4" DEPTH MIN.
29	1	SERIES "SF", FRAME HEAD, DOUBLE RABBET PROFILE FACE SHEET CONFORMING TO ASTM A366 AND ASTM A653	16 GA. (.053 MIN.) STEEL COMMERCIAL QUALITY COLD ROLLED STEEL (MINIMUM YEILD STR. OF Fy=36,000 psi)	2" - 4" FACE, 5-3/4" DEPTH MIN.
30	2	ROLL FORMED CHANNEL ON THE BOTTOM OF BOTH DOORS, SPOT WELDED TO EXTERIOR AND INTERIOR SKINS.		1" X 1-3/4" X 1" X 16 GA. (.053" MIN)
31	4	VERTICAL ROD REINFORCEMENT AT PUSH BAR MOUNTING LOCATION ON BOTH DOOR PANELS	STEEL PLATE	12 GA. (.093" MIN)
32	4	VERTICAL ROD REINFORCEMENT AT EACH LATCH LOCATION AT TOP AND BOTTOM OF BOTH DOOR PANELS	STEEL PLATE	12 GA. (.093" MIN)
OR				
33	2	SURFACE BOLT REINFORCEMENT AT EACH SURFACE BOLT LOCATION, TOP AND BOTTOM OF INACTIVE DOOR PANEL	STEEL PLATE	12 GA. (.093" MIN)

APPROVED AS COMPLYING WITH THE SOUTH FLORIDA BUILDING CODE
DATE APR 26 2001
BY Manuel Peres
PRODUCT CONTROL DIVISION
BUILDING CODE COMPLIANCE OFFICE
ACCEPTANCE NO. 01-0118.01

D 11/22/00 GWS	Was Previously Listed As Sheet 8. Add Details To Caulk. Revised Top & Bottom Channel To Note Welded To Both Face Sheets. Deleted "C" Ring Item 24. Revised Item 25 from 16 ga to 12 ga. Qty was Incorrectly listed as 2 For Items 21, 25, & 29. Qty was Incorrectly listed as 4 For 28. Qty Was Incorrectly Listed As 1 For Item 30.
C 5/31/00 JAR	Made corrections to hardware descriptions
B 2/24/00 JAR	Revised Format, Transferred Information from NOA
A 7/27/97 CWS	Revised Sheet Number
ISSUE	REVISIONS

MATERIAL SPECIFICATIONS:

6-0 x 7-0 Series Bill Of Materials

CECO DOOR PRODUCTS
Milan, Tennessee 38358

DRAWN BY: GWS
DATE: 6/12/97
DRAWING NUMBER: RD0089
Sheet 11 of 12

ITEM	QTY	DESCRIPTION	MATERIAL	SIZE
1				
2				
3				
4				
5				
6				
7				
8				
9				
10				
11				
12				
13				
14				
15				
16				
17				
18				
19				
20				
21				
22	2	ROLL FORMED STEEL CHANNEL ON THE TOP OF BOTH DOORS SPOT WELDED TO EXTERIOR AND INTERIOR SKINS		3/4" X 1-3/4" X 3/4" X 16 GA. (.053" MIN)
23				
24				
25				
26	2	CLOSER REINFORCEMENT AT EACH CLOSER LOCATION AT TOP OF BOTH DOOR PANELS (OPTIONAL)	STEEL	12 Ga (.093) x 4-1/2" x 19"
27		VERTICAL STEEL STIFFENED HAT SECTION SPOT WELDED TO SKINS	STEEL	22 GA (.026" MIN)
28				
29				
30	2	ROLL FORMED CHANNEL ON THE BOTTOM OF BOTH DOORS, SPOT WELDED TO EXTERIOR AND INTERIOR SKIN.		3/4" X 1-3/4" X 3/4" X 16 GA. (.053" MIN)
31	2	VERTICAL ROD REINFORCEMENT AT PUSH BAR MOUNTING LOCATION ON BOTH DOOR PANELS	STEEL PLATE	12 GA. (.093" MIN) x 3-1/4" x 16"
32	4	VERTICAL ROD REINFORCEMENT AT EACH LATCH LOCATION ON BOTH DOOR PANELS	STEEL PLATE	12 GA. (.093" MIN) x 3-1/4" x DOOR HEIGHT MINUS 1-3/4"
OR				
33	4	SURFACE BOLT REINFORCEMENT AT EACH SURFACE BOLT LOCATION, TOP AND BOTTOM OF INACTIVE DOOR PANEL	STEEL PLATE	12 GA. (.093" MIN) x 3-1/4" x 20"

APPROVED AS COMPLYING WITH THE SOUTH FLORIDA BUILDING CODE
DATE APR 26 2001
BY Manuel Lopez
PRODUCT CONTROL DIVISION
BUILDING CODE COMPLIANCE OFFICE
ACCEPTANCE NO. 01-0119.01

A 11/22/00 GWS	Add Sheet To Show Alternative Center Seam Design
ISSUE	REVISIONS

MATERIAL SPECIFICATIONS:

Alternative Center Seam Design
6-0 x 7-0 Series
Bill Of Materials

CECO DOOR PRODUCTS
Milan, Tennessee 38358

DRAWN BY: GWS
DATE: 6/12/97
DRAWING NUMBER: RD0089
Sheet 12 of 12