MIAMI-DADE

BUILDING CODE COMPLIANCE OFFICE (BCCO)
PRODUCT CONTROL DIVISION

MIAMI-DADE COUNTY, FLORIDA
METRO-DADE FLAGLER BUILDING
140 WEST FLAGLER STREET, SUITE 1603
MIAMI, FLORIDA 33130-1563
(305) 375-2901 FAX (305) 375-2908

NOTICE OF ACCEPTANCE (NOA)

Jeld-Wen, Inc.
31725 Highway 97 North
Chiloquin, OR 97624

SCOPE:
This NOA is being issued under the applicable rules and regulations governing the use of construction materials. The documentation submitted has been reviewed by Miami-Dade County Product Control Division and accepted by the Board of Rules and Appeals (BORA) to be used in Miami Dade County and other areas where allowed by the Authority Having Jurisdiction (AHJ).

This NOA shall not be valid after the expiration date stated below. The Miami-Dade County Product Control Division (In Miami Dade County) and/or the AHJ (in areas other than Miami Dade County) reserve the right to have this product or material tested for quality assurance purposes. If this product or material fails to perform in the accepted manner, the manufacturer will incur the expense of such testing and the AHJ may immediately revoke, modify, or suspend the use of such product or material within their jurisdiction. BORA reserves the right to revoke this acceptance, if it is determined by Miami-Dade County Product Control Division that this product or material fails to meet the requirements of the applicable building code.

This product is approved as described herein, and has been designed to comply with the High Velocity Hurricane Zone of the Florida Building Code.

DESCRIPTION: Jeld-Wen Series **"DoorCraft" double outswing Insulated Steel Door (Steel edge)**

APPROVAL DOCUMENT: Drawing No. **S-2074**, titled "Outswing Steel Door ", sheets 1 through 8 of 8, prepared by R.W. Building Consultants, Inc, dated 12-01-00 and last revised on 05-20-02, bearing the Miami-Dade County Product Control Approval stamp with the Notice of Acceptance number and approval date by the Miami-Dade County Product Control Division.

MISSILE IMPACT RATING: Large Missile Impact Resistant

LABELING: Each unit shall bear a permanent label with the manufacturer's name or logo, city, state and following statement: "Miami-Dade County Product Control Approved", unless otherwise noted herein.

RENEWAL of this NOA shall be considered after a renewal application has been filed and there has been no change in the applicable building code negatively affecting the performance of this product.

TERMINATION of this NOA will occur after the expiration date or if there has been a revision or change in the materials, use, and/or manufacture of the product or process. Misuse of this NOA as an endorsement of any product, for sales, advertising or any other purposes shall automatically terminate this NOA. Failure to comply with any section of this NOA shall be cause for termination and removal of NOA.

ADVERTISEMENT: The NOA number preceded by the words Miami-Dade County, Florida, and followed by the expiration date may be displayed in advertising literature. If any portion of the NOA is displayed, then it shall be done in its entirety.

INSPECTION: A copy of this entire NOA shall be provided to the user by the manufacturer or its distributors and shall be available for inspection at the job site at the request of the Building Official.
This NOA **01-0122.11** and consists of this page 1 as well as approval document mentioned above.
The submitted documentation was reviewed by **Ishaq I. Chanda, P. E.**

PRODUCT CONTROL ACCEPTED

Jeld-Wen, Inc.

NOTICE OF ACCEPTANCE: EVIDENCE SUBMITTED
(For File ONLY. Not part of NOA)

A. DRAWINGS

1. Manufacturer's die drawings and sections.
2. Drawing No. **S-2074**, titled "Outswing steel Door ", sheets 1 through 8 of 8, prepared by R.W. Building Consultants, Inc, dated 12-01-00 and last revised on 05-20-02.

B. TESTS

1. Test report on 1) Air Infiltration Test, per PA 202-94
   2) Uniform Static Air Pressure Test, Loading per PA 202-94
   3) Water Resistance Test, per PA 202-94(Not tested)
   4) Large Missile Impact Test, SFBC PA 201-94
   5) Cyclic Loading Test, per SFBC PA 203-94
   6) Forced Entry Test, per SFBC 3603.2 (b) and PA 202-94

   along with marked-up drawings and installation diagram of double outswing opaque steel doors, prepared by Certified Testing Laboratories, Test Report No. **CTLA632W**, dated January 05, 2001, signed and sealed by Ramesh Patel, P.E. (This test report has been revised by addendum letter dated August 23, 2001, issued by CTL and signed and sealed by Ramesh Patel, P.E.
2. Test reports on 1) Air Infiltration Test, per PA 202-94
   2) Uniform Static Air Pressure Test, Loading per PA 202-94
   3) Water Resistance Test, per PA 202-94
   4) Large Missile Impact Test per SFBC, PA 201-94
   5) Cyclic Wind Pressure Loading per SFBC, PA 203-94
   6) Forced Entry Test, per SFBC 3603.2 (b) and PA 202-94

   along with marked-up drawings and installation diagram of single outswing opaque steel doors, prepared by Certified Testing Laboratories, Test Report No. **CTLA629W**, dated January 15, 2001, signed and sealed by Ramesh Patel, P.E. (This test report has been revised by addendum letter dated August 23, 2001, issued by CTL and signed and sealed by Ramesh Patel, P.E.)

C. CALCULATIONS

1. Anchor verification calculations, dated November 12, 2001 and revised on April 07, 2002, prepared, signed and sealed by Wendell W. Haney, P.E.
2. Anchor verification calculations, dated 01-17-01., prepared, signed and sealed by Mark Fetherman, P.E.

D. MATERIAL CERTIFICATIONS

1. Test report No. J99006660-001 dated April 08, 1999, issued by Intertek Testing Services for expanded Polystyrene for smoke density per ASTM E84-97A and self-ignition per ASTM-1929D signed and sealed by Doug Tucker, P.E.

Ishaq I. Chanda

Ishaq I. Chanda, P. E.
Product Control Examiner
NOA No 01-0122.11
Expiration Date: June 13, 2007
Approval Date: June 13, 2002

NOTICE OF ACCEPTANCE: EVIDENCE SUBMITTED
(For File ONLY. Not part of NOA)

D. MATERIAL CERTIFICATIONS (continue):

2. Tensile test report No. CTLA629W dated January 11, 2001 for steel face sheet per ASTM-E8/A370, issued by Certified Testing Lab, signed and sealed by Ramesh Patel, P.E.
3. Tensile test report No. CTLA632W dated January 11, 2001 for steel face sheet per ASTM-E8/A370, issued by Certified Testing Lab, signed and sealed by Ramesh Patel, P.E.

E. STATEMENTS

1. Letter of conformance and "No financial interest, dated 11-13-2001 signed & sealed by Mark C. Fetherman, P.E.
2. Statement letter of compliance, as part of test report, issued by Certified Testing Laboratories, Report No. **CTLA629W & CTLA629W** signed and sealed by Ramesh Patel, P.E.
3. Addendum letter dated August 23, 2001, issued by CTL and signed and sealed by Ramesh Patel, P.E.
4. Statement letter dated January 11, 2001 issued by Jeld-Wen designating Mr. Rick Wright, of R W Building Consultant, as representative and contact person, signed by Steve Frey.

F. OTHER

1. None

Ishaq I. Chanda

Ishaq I. Chanda, P. E.
Product Control Examiner
NOA No 01-0122.11
Expiration Date: June 13, 2007
Approval Date: June 13, 2002

DoorCraft® Steel Door

SINGLE OR DOUBLE OUT-SWING STEEL EDGE DOOR IN A HOLLOW METAL STEEL FRAME

GENERAL NOTES

1. THIS PRODUCT IS DESIGNED TO MEET THE SOUTH FLORIDA BUILDING CODE 1994 EDITION FOR MIAMI–DADE COUNTY.
2. WOOD BUCKS BY OTHERS, MUST BE ANCHORED PROPERLY TO TRANSFER LOADS TO THE STRUCTURE.
3. PRODUCT ANCHORS SHALL BE AS LISTED AND SPACED AS SHOWN ON DETAILS. ANCHOR EMBEDMENT TO BASE MATERIAL SHALL BE BEYOND WALL DRESSING OR STUCCO.
4. DESIGNED PRESSURE RATING SHALL BE AS FOLLOWS: –SEE DESIGN PRESSURE RATING TABLE SHEET ONE.
5. THIS SYSTEM MEETS THE WATER REQUIREMENTS IN MIAMI–DADE COUNTY.

RESIDENTIAL INSULATED STEEL DOOR W/STEEL EDGE
(Common to all frame conditions)

Door Leaf Construction:

Face sheets: 24 ga. (0.022") minimum thickness, Galvanized steel A–525 commercial quality – AKDQ per ASTM 620 with ave. min. yield strength Fy=53,650 psi.

Core design: Expanded polystyrene with 1.0 to 1.25 lbs. density mfg. by Jeld–Wen.

Construction: The .022" thk. steel face sheets are glued to the expanded polystyrene (EPS). The steel rails (.040" min.) and steel stiles (.040" min.) are rolled formed. The face skin at the top and sides are bent over and into the stiles & rails to make a mechanical lock. At the bottom the face skin is bent 90° over the rail. A wood lock block reinforcement is used.

Frame Construction: The head jambs and side jambs are a one piece formed steel frame from 16ga. galvanized steel. The corners are mitered butted. The header has slots for the tabs that are welded to the side jambs. The tabs are bent 90° over the header after being slipped through the slots. The units use a bump face threshold.

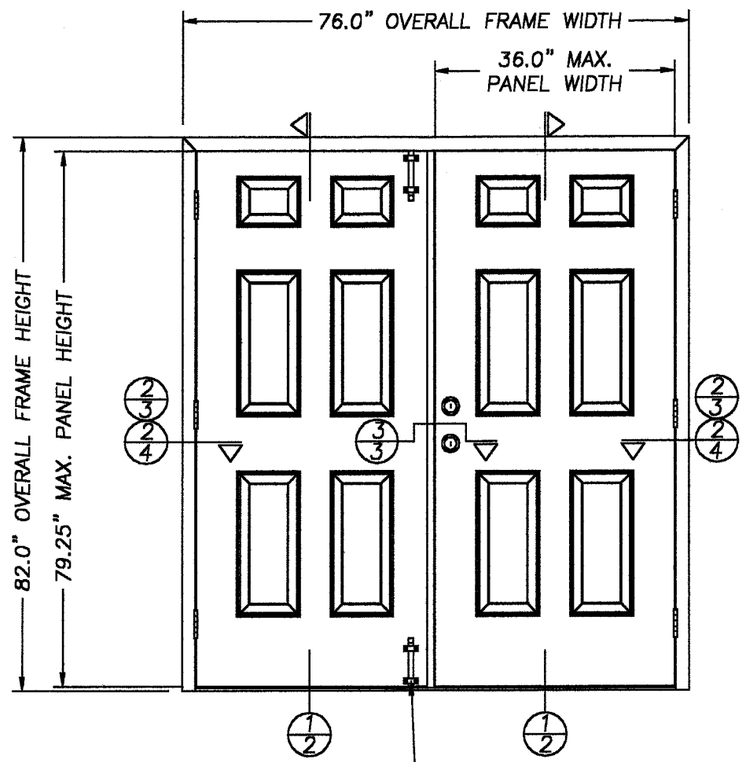

6–0 x 6–8 OUTSWING ELEVATION
VIEWED FROM THE EXTERIOR

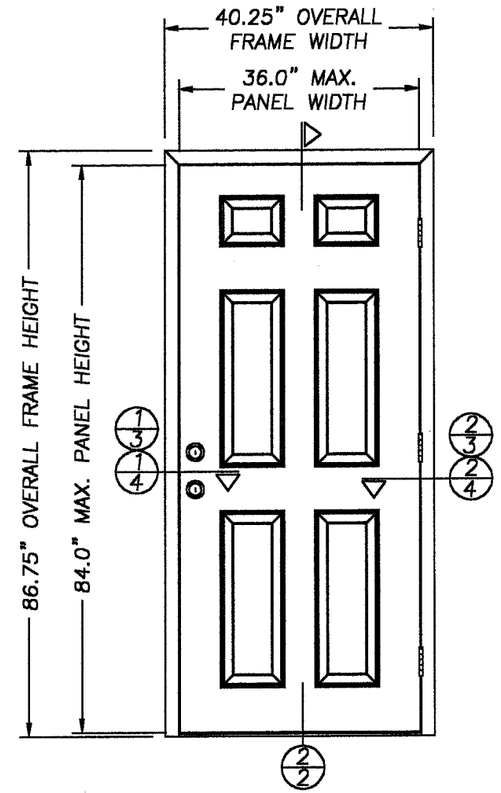

3–0 x 7–0 OUTSWING ELEVATION
VIEWED FROM THE EXTERIOR

TABLE OF CONTENTS

SHEET #	DESCRIPTION
1	GENERAL NOTES & TYPICAL ELEVATIONS
2	VERTICAL CROSS SECTION & BILL OF MATERIALS
3	HORIZONTAL CROSS SECTIONS, 1/3, 2/3 & 3/3
4	HORIZONTAL CROSS SECTIONS, 1/4 & 2/4
5	ANCHORING LOCATIONS, DETAILS & ANCHORS
6	ANCHORING LOCATIONS, DETAILS & ANCHORS
7	ANCHORING LOCATIONS, DETAILS & ANCHORS
8	UNIT COMPONENTS & DOOR MODELS

DESIGN PRESSURE RATING

UNIT TYPE	WHERE WATER INFILTRATION REQUIREMENT IS NEEDED
3–0 x 7–0 SINGLE W/BUMP THRESHOLD	MAX. +80.0 psf –80.0 psf (SEE INSTALLATIONS)
6–0 x 6–8 DOUBLE W/HIGH DAM THRESHOLD	+55.0 psf –55.0 psf

Approved as complying with the Florida Buiding Code
Date JUNE 13, 2002
NOA# 01-0122.11
Miami Dade Product Control Division
By Shaz I. Chanda

JELD-WEN, INC.
31725 HIGHWAY 97 NORTH
CHILOQUIN, OR. 97624
PH. 541.783.2057

PRODUCT: DoorCraft® Steel Door OUTSWING STEEL DOOR & HOLLOW METAL FRAME

PART OR ASSEMBLY: GENERAL NOTES AND TYPICAL ELEVATIONS

REVISIONS

NO.	DATE		BY
4	05/20/02	GENERAL REVISION	TJH
3	05/13/02	GENERAL REVISION	TJH
2	03/12/02	GENERAL REVISION	TJH
1	12/04/01	GENERAL REVISION	TJH

RW BUILDING CONSULTANTS, INC.
813.684.3831

DATE: 12/01/00
SCALE: N.T.S.
DWG. BY: TJH
CHK. BY: RW
DRAWING NO.: S–2074
SHEET 1 OF 8

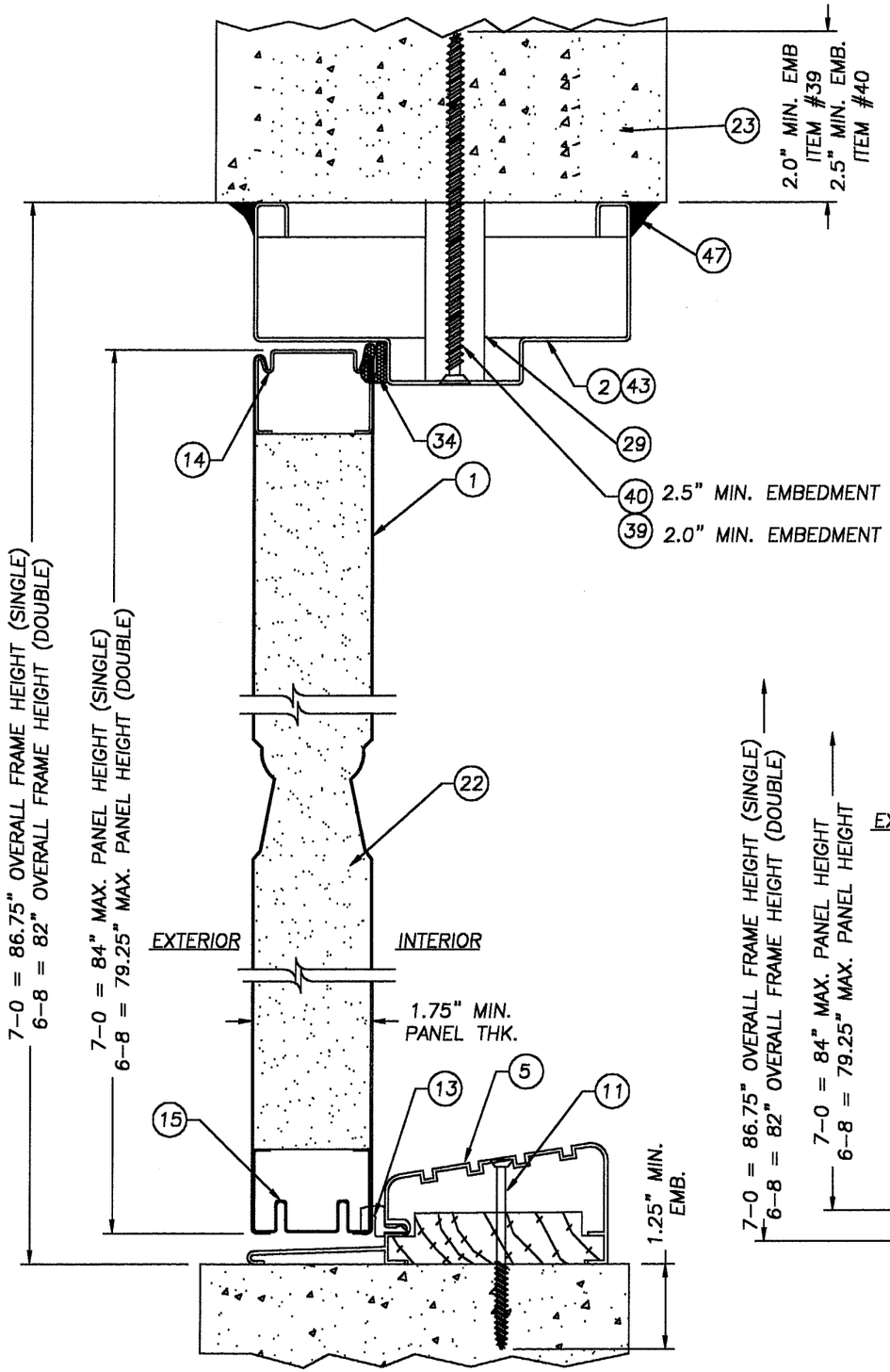

1/2 VERTICAL CROSS SECTION
W/HIGH WATER DAM THRESHOLD

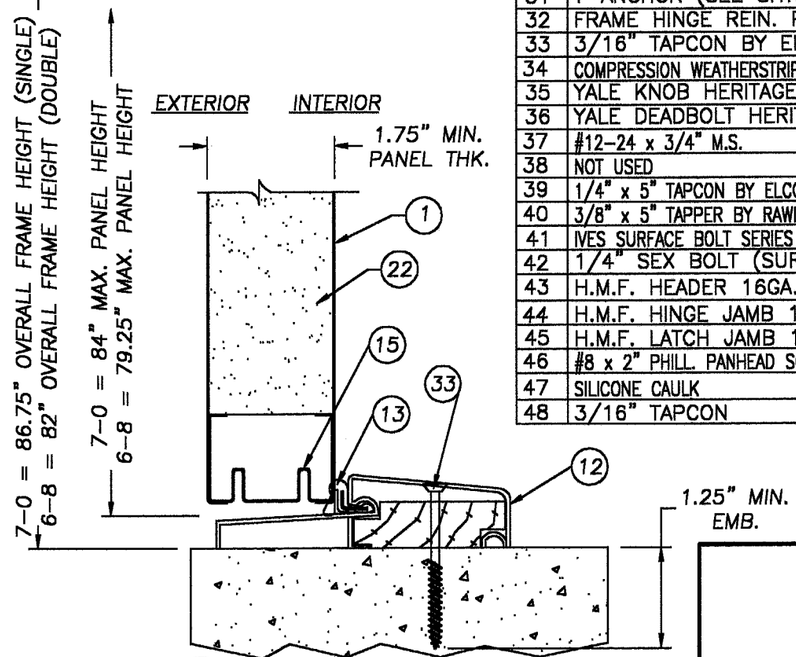

2/2 VERTICAL CROSS SECTION
W/BUMPFACE THRESHOLD
THIS CONFIGURATION ONLY MEETS WATER REQUIREMENT WITH THE SINGLE UNIT

ITEM	DESCRIPTION	MATERIAL
1	DOOR, FACE SHEET 24GA. (.022"MIN.)	STEEL
2	H.M.F. HEADER 16GA. STEEL (BY FLEMING)	STEEL
3	H.M.F. HINGE JAMB 16GA. STEEL (BY FLEMING)	STEEL
4	H.M.F. LATCH JAMB 16GA. STEEL (BY FLEMING)	STEEL
5	OUTSWING BUMPER THRESHOLD HIGH WATER DAM(BY IMPERIAL .051" EXTRUDED ALUM.)	ALUM.
6	4" x 4" BUTT HINGE 12ga.(.097" HAGER)	STEEL
7	#9 X 1" PFH WOOD SCREW (HINGE TO DOOR)	STEEL
8	#10-24 x 3/4" M.S. (HINGE TO FRAME)	STEEL
9	#8-32 x 3/4" M.S. (DEADBBOLT PLATE TO FRAME)	STEEL
10	#10 x 2" PFH WOOD SCREW	STEEL
11	3/16" TAPCON BY ELCO	STEEL
12	OUTSWING BUMPER THRESHOLD (.053" EXTRUDED ALUM.)	ALUM.
13	COMPRESSION WEATHERSTRIP THRESHOLD (SCHLEGEL Q-LON QDS 650)	FOAM
14	TOP RAIL (1.73" x 1.21" x 0.040" THK.)	STEEL
15	BOTTOM RAIL (1.73" x 1.21" x 0.040" THK.)	STEEL
16	SIDE STILE (1.73" x 1.21" x 0.040" THK.)	STEEL
17	#8 x 2 1/2" PFH WOOD SCREW	STEEL
18	# 8 x 2" PFH WOOD SCREW	STEEL
19	WOOD LOCK BLOCK (1.67" x 3.0" x 11.75")	WOOD
20	1.18" x 1.18" x 82" MDF BOARD	STEEL
21	STEEL Z-ASTRAGAL	STEEL
22	EXPANDED POLYSTYRENE (1.0 to 1.25 lb. DENSITY) BY JELD-WEN	FOAM
23	MASONRY WALL CONCRETE	CONC.
24	WOOD STRUCTURAL MEMBER	WOOD
25	KWIKSET TITAN 700 SERIES KNOB	–
26	KWIKSET TITAN 700 SERIES DEADBOLT	–
27	WOOD/METAL STUD ANCHOR (SEE SHT. 5)	STEEL
28	COMPRESSION ANCHOR (SEE SHT. 5)	STEEL
29	BUTTERFLY ANCHOR (SEE SHT. 5)	STEEL
30	Z-ANCHOR (SEE SHT. 5)	STEEL
31	T-ANCHOR (SEE SHT. 5)	STEEL
32	FRAME HINGE REIN. PLATE	FOAM
33	3/16" TAPCON BY ELCO	STEEL
34	COMPRESSION WEATHERSTRIP FRAME (SCHLEGEL Q-LON QDST 675)	FOAM
35	YALE KNOB HERITAGE SERIES	–
36	YALE DEADBOLT HERITAGE SERIES	–
37	#12-24 x 3/4" M.S.	STEEL
38	NOT USED	–
39	1/4" x 5" TAPCON BY ELCO	STEEL
40	3/8" x 5" TAPPER BY RAWL	STEEL
41	IVES SURFACE BOLT SERIES 455	STEEL
42	1/4" SEX BOLT (SURFACE BOLT ATTACHMENT)	STEEL
43	H.M.F. HEADER 16GA. STEEL (BY KEWANEE)	STEEL
44	H.M.F. HINGE JAMB 16GA. STEEL (BY KEWANEE)	STEEL
45	H.M.F. LATCH JAMB 16GA. STEEL (BY KEWANEE)	STEEL
46	#8 x 2" PHILL. PANHEAD SCREW	STEEL
47	SILICONE CAULK	SILICONE
48	3/16" TAPCON	STEEL

JELD-WEN, INC.
31725 HIGHWAY 97 NORTH
CHILOQUIN, OR. 97624
PH. 541.783.2057

PRODUCT: DoorCraft® Steel Door OUTSWING STEEL DOOR & HOLLOW METAL FRAME

PART OR ASSEMBLY: VERTICAL CROSS SECTION & BILL OF MATERIALS

REVISIONS

NO.	DATE		BY
4	05/20/02	GENERAL REVISION	TJH
3	05/13/02	GENERAL REVISION	TJH
2	03/12/02	GENERAL REVISION	TJH
1	12/04/01	GENERAL REVISION	TJH

RW BUILDING CONSULTANTS, INC.
813.684.3831

Approved as complying with the Florida Buiding Code
Date JUNE 13, 2002
NOA# 01-0122.11
Miami Dade Product Control Division
By Ishaq I. Chanda

DATE: 12/01/00
SCALE: N.T.S.
DWG. BY: TJH
CHK. BY: RW
DRAWING NO.: S-2074
SHEET 2 OF 8

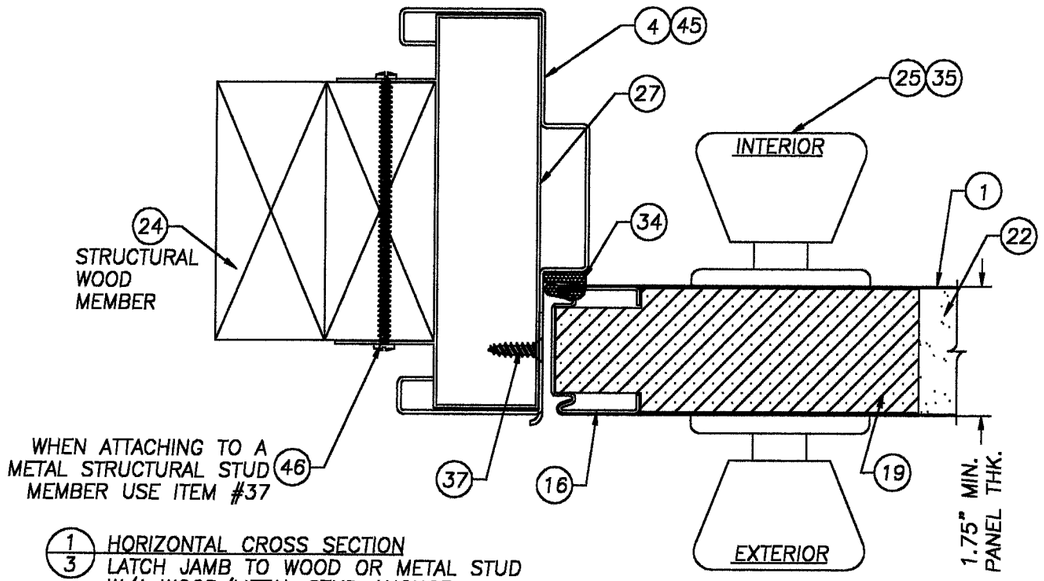

1/3 HORIZONTAL CROSS SECTION
LATCH JAMB TO WOOD OR METAL STUD
W/A WOOD/METAL STUD ANCHOR

NOTE:
STRUCTURAL WOOD OR STEEL MEMBERS MUST CARRY 142 #/ft LOAD AND THE STRUCTURAL MEMBERS MUST BE VERIFIED BY THE APPROPRIATE OFFICIAL.

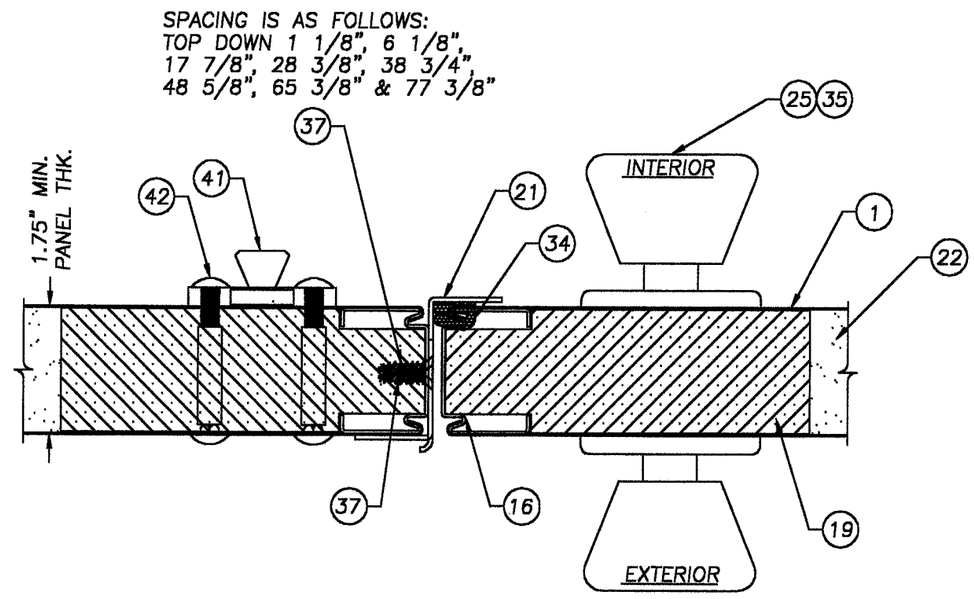

3/3 HORIZONTAL CROSS SECTION
AT Z-ASTRAGAL
THE SURFACE BOLTS ARE
ON THE INACTIVE DOOR ONLY (TOP & BOTTOM)

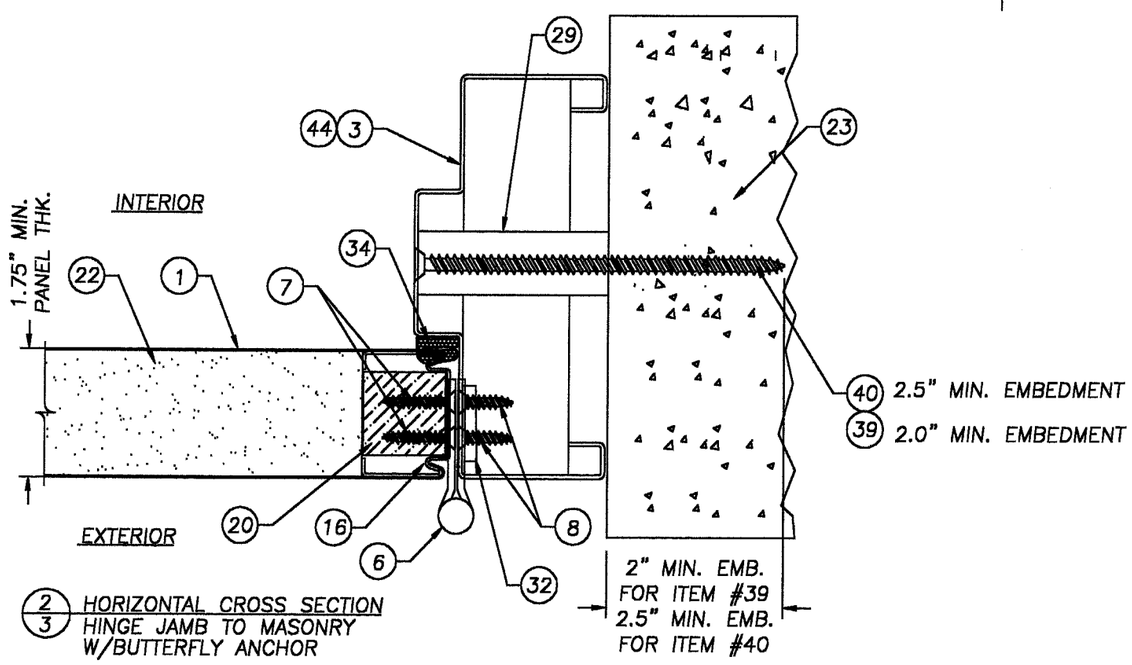

2/3 HORIZONTAL CROSS SECTION
HINGE JAMB TO MASONRY
W/BUTTERFLY ANCHOR

JELD-WEN, INC.
31725 HIGHWAY 97 NORTH
CHILOQUIN, OR. 97624
PH. 541.783.2057

PRODUCT: DoorCraft® Steel Door OUTSWING STEEL DOOR & HOLLOW METAL FRAME

PART OR ASSEMBLY: HORIZONTAL CROSS SECTIONS, 1/3, 2/3 & 3/3

REVISIONS

NO.	DATE		BY
4	05/20/02	GENERAL REVISION	TJH
3	05/13/02	GENERAL REVISION	TJH
2	03/12/02	GENERAL REVISION	TJH
1	12/04/01	GENERAL REVISION	TJH

RW BUILDING CONSULTANTS, INC.
813.684.3831

Approved as complying with the Florida Buiding Code
Date JUNE 13, 2002
NOA# 01-0122.11
Miami Dade Product Control Division
By Ishay I. Chaute

DATE: 12/01/00
SCALE: N.T.S.
DWG. BY: TJH
CHK. BY: RW
DRAWING NO.: S-2074

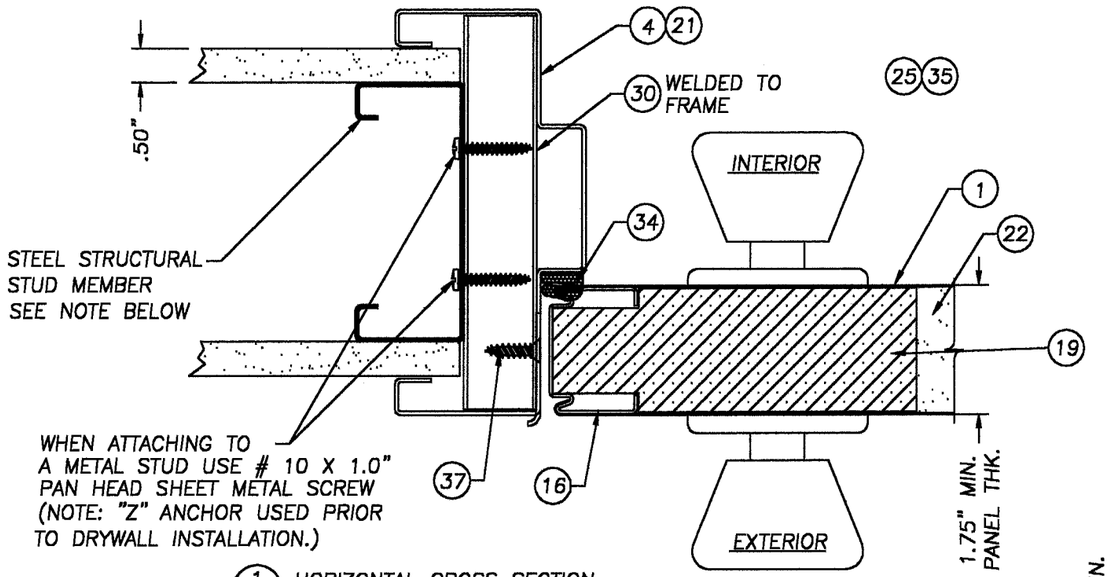

1/4 HORIZONTAL CROSS SECTION
LATCH JAMB TO METAL STUD W/Z-ANCHOR

NOTE:
STRUCTURAL WOOD OR STEEL MEMBERS MUST CARRY 142 #/ft LOAD AND THE STRUCTURAL MEMBERS MUST BE VERIFIED BY THE APPROPRIATE OFFICIAL.

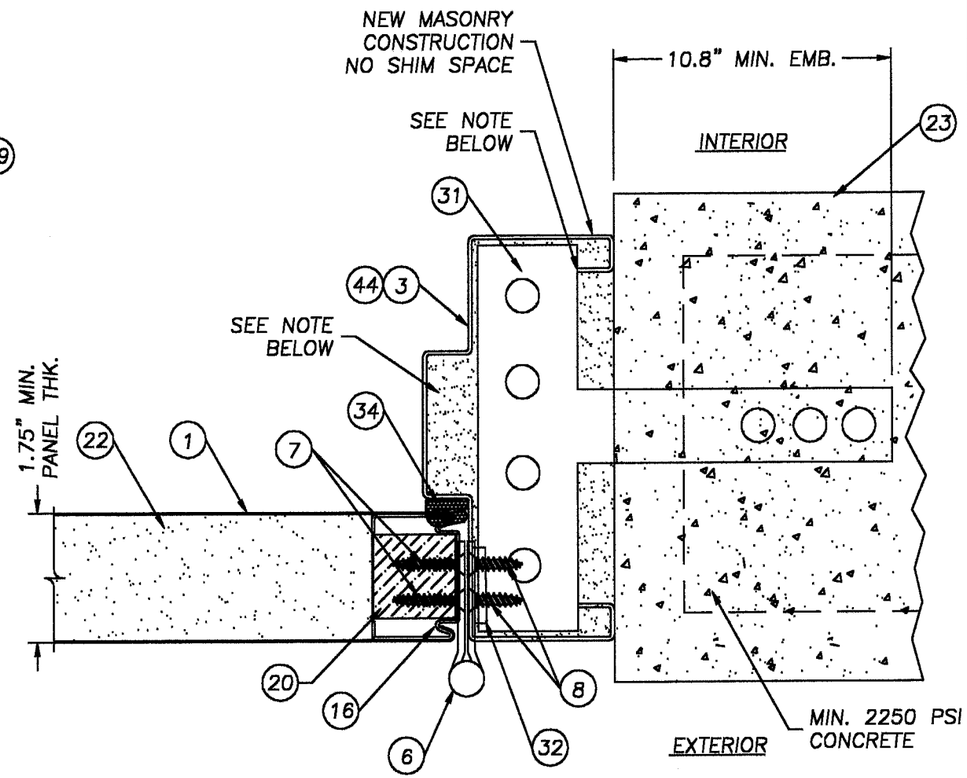

2/4 HORIZONTAL CROSS SECTION
HINGE JAMB TO MASONRY W/T-ANCHOR (TOTAL 5 PER JAMB 18.0" O.C. MAX.)

NOTE:
THE FRAME MUST BE GROUT FILLED OR THE T-ANCHOR MUST BE WELDED TO THE H.M.F.

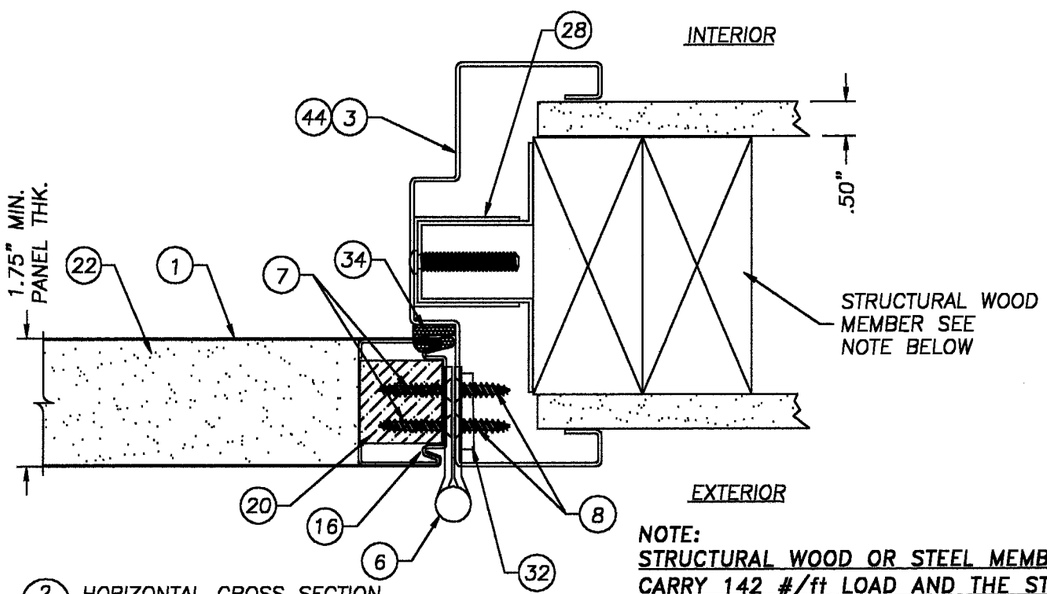

2/4 HORIZONTAL CROSS SECTION
HINGE JAMB TO WOOD OR METAL STUD W/COMPRESSION ANCHOR

NOTE:
STRUCTURAL WOOD OR STEEL MEMBERS MUST CARRY 142 #/ft LOAD AND THE STRUCTURAL MEMBERS MUST BE VERIFIED BY THE APPROPRIATE OFFICIAL.

JELD-WEN, INC.
31725 HIGHWAY 97 NORTH
CHILOQUIN, OR. 97624
PH. 541.783.2057

PRODUCT: DoorCraft® Steel Door OUTSWING STEEL DOOR & HOLLOW METAL FRAME

PART OR ASSEMBLY: HORIZONTAL CROSS SECTIONS, 1/4 & 2/4

NO.	DATE	REVISIONS	BY
4	05/20/02	GENERAL REVISION	TJH
3	05/13/02	GENERAL REVISION	TJH
2	03/12/02	GENERAL REVISION	TJH
1	12/04/01	GENERAL REVISION	TJH

RW BUILDING CONSULTANTS, INC.
813.684.3831

Approved as complying with the Florida Buiding Code
Date JUNE 13, 2002
NOA# 01-0122.11
Miami Dade Product Control Division
By Ishaq I. Chanda

DATE: 12/01/00
SCALE: N.T.S.
DWG. BY: TJH
CHK. BY: RW
DRAWING NO.: S-2074
SHEET 4 OF 8

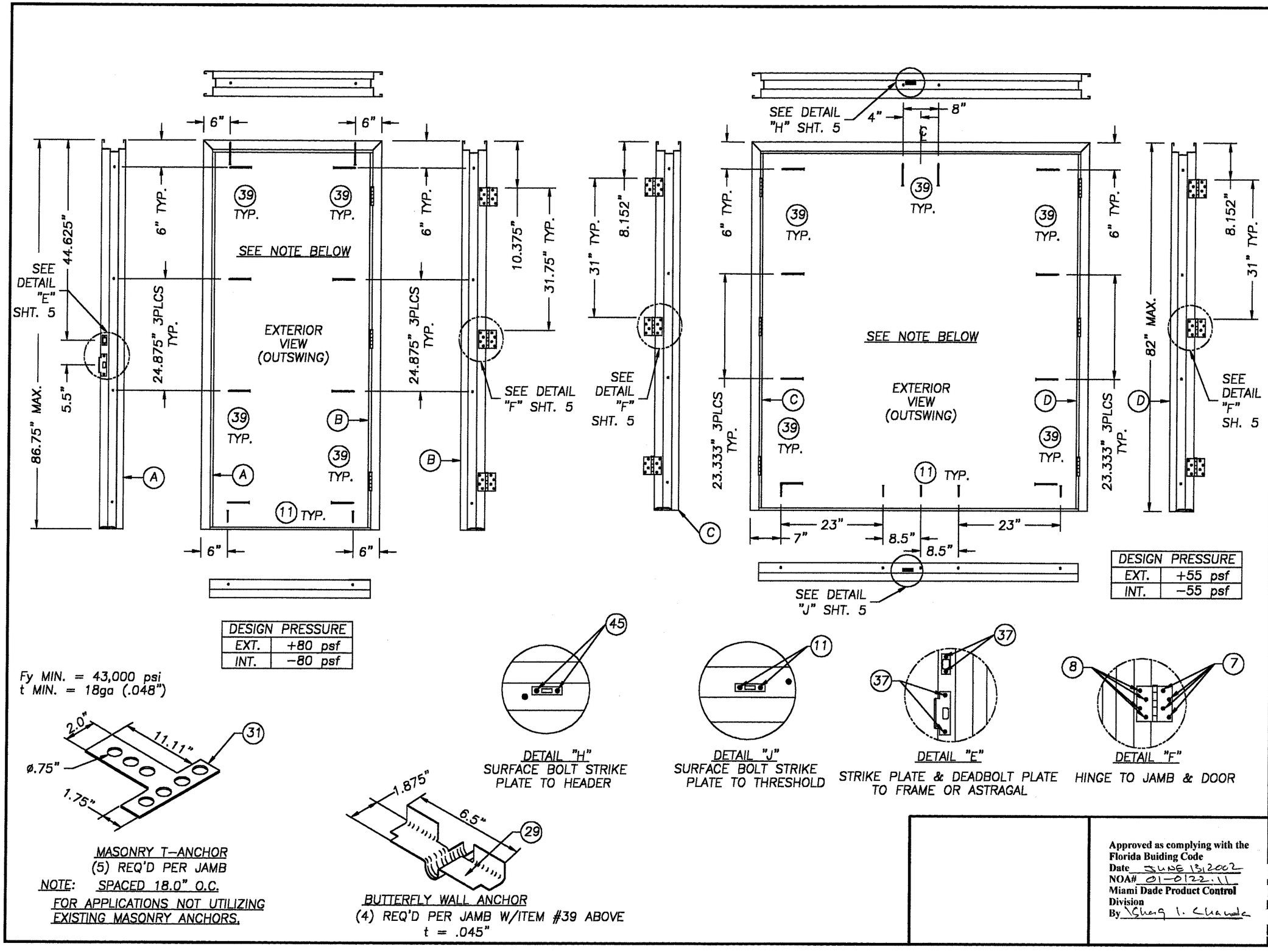

DESIGN PRESSURE	
EXT.	+80 psf
INT.	−80 psf

DESIGN PRESSURE	
EXT.	+55 psf
INT.	−55 psf

DETAIL "H"
SURFACE BOLT STRIKE PLATE TO HEADER

DETAIL "J"
SURFACE BOLT STRIKE PLATE TO THRESHOLD

DETAIL "E"
STRIKE PLATE & DEADBOLT PLATE TO FRAME OR ASTRAGAL

DETAIL "F"
HINGE TO JAMB & DOOR

MASONRY T-ANCHOR
(5) REQ'D PER JAMB
NOTE: SPACED 18.0" O.C.
FOR APPLICATIONS NOT UTILIZING EXISTING MASONRY ANCHORS.

BUTTERFLY WALL ANCHOR
(4) REQ'D PER JAMB W/ITEM #39 ABOVE
t = .045"

Approved as complying with the Florida Buiding Code
Date JUNE 13, 2002
NOA# 01-0122.11
Miami Dade Product Control Division
By Sheng I. Chanda

JELD-WEN, INC.
31725 HIGHWAY 97 NORTH
CHILOQUIN, OR. 97624
PH. 541.783.2057

PRODUCT: DoorCraft® STEEL DOOR OUTSWING STEEL DOOR & HOLLOW METAL FRAME

PART OR ASSEMBLY: ANCHORING LOCATIONS, DETAILS & ANCHORS

REVISIONS

NO.	DATE		BY
4	05/20/02	GENERAL REVISION	TJH
3	05/13/02	GENERAL REVISION	TJH
2	03/12/02	GENERAL REVISION	TJH
1	12/04/01	GENERAL REVISION	TJH

RW BUILDING CONSULTANTS, INC.
813.684.3831

DATE: 12/01/00
SCALE: N.T.S.
DWG. BY: TJH
CHK. BY: RW
DRAWING NO.: S-2074
SHEET 5 OF 8

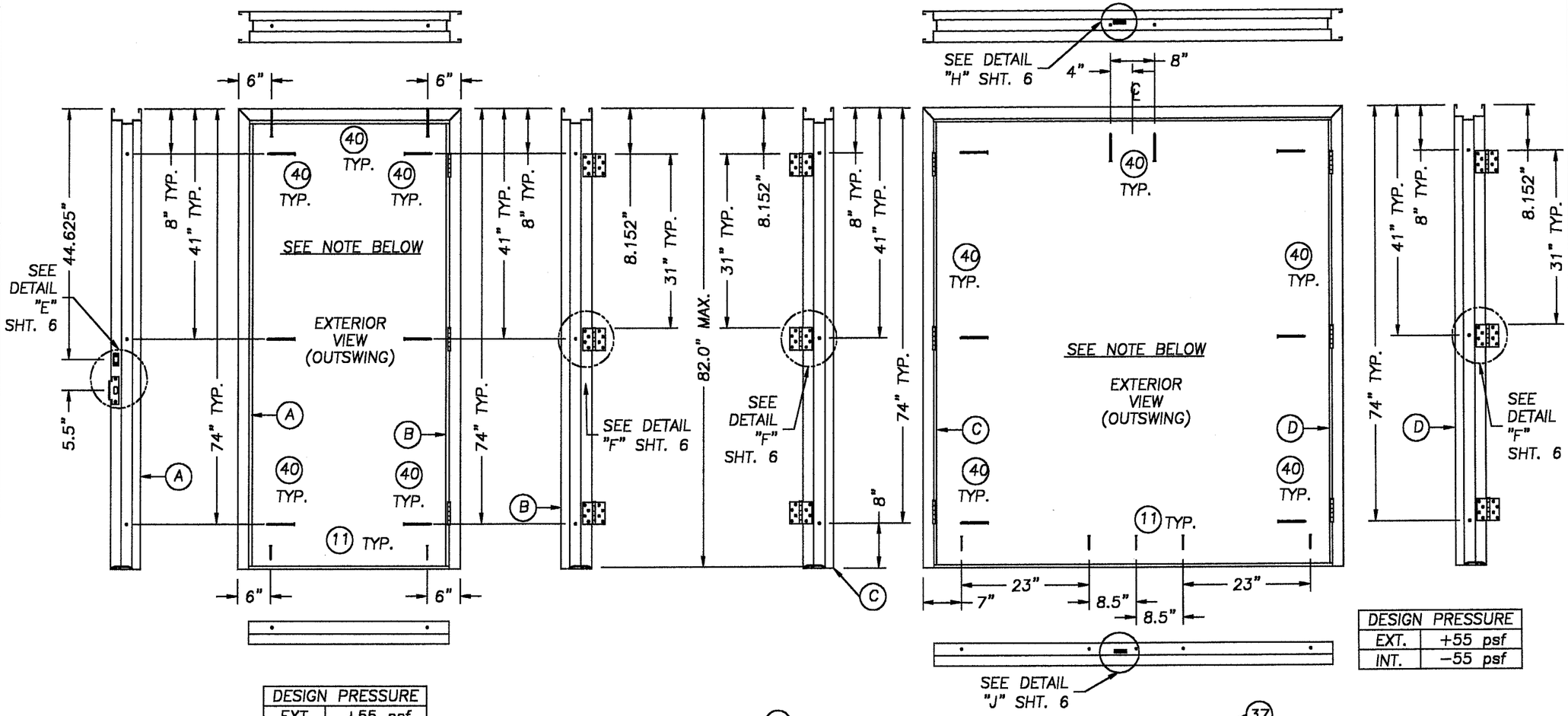

DESIGN PRESSURE	
EXT.	+55 psf
INT.	−55 psf

DESIGN PRESSURE	
EXT.	+55 psf
INT.	−55 psf

Fy = 43,000 MIN.
t = .053" MIN.

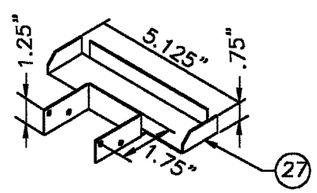

WOOD/METAL STUD ANCHOR
(3) REQ'D PER JAMB
SAME SPACING AS ITEM #40 ABOVE

ATTACH TO WOOD STUD USING:
ITEM #46 (2) PER STRAP
(4) TOTAL PER ANCHOR

ATTACH TO METAL STUD USING:
ITEM #37 (2) PER STRAP
(4) TOTAL PER ANCHOR

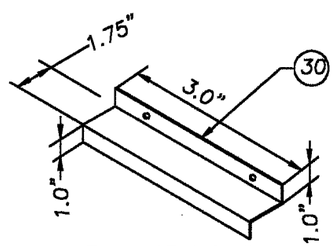

Fy = 43 ksi MIN.
t = .053" MIN.

Z-ANCHOR
(3) REQ'D PER JAMB
SAME SPACING AS ITEM #40 ABOVE

ATTACH TO METAL STUD USING:
2 # 10 X 1.0" PAN HEAD
SHEET METAL SCREWS PER ANCHOR

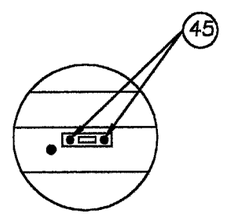

DETAIL "H"
SURFACE BOLT STRIKE PLATE TO HEADER

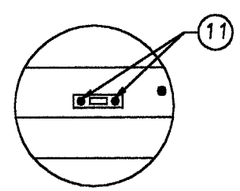

DETAIL "J"
SURFACE BOLT STRIKE PLATE TO THRESHOLD

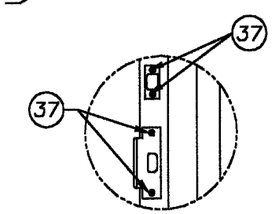

DETAIL "E"
STRIKE PLATE & DEADBOLT PLATE TO FRAME OR ASTRAGAL

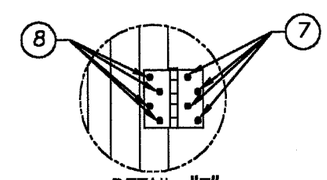

DETAIL "F"
HINGE TO JAMB & DOOR

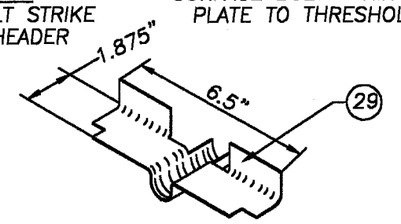

BUTTERFLY WALL ANCHOR
(3) REQ'D PER JAMB W/ITEM #40 ABOVE
t = .045"

Approved as complying with the Florida Buiding Code
Date JUNE 13, 2002
NOA# 01-0122.11
Miami Dade Product Control Division
By Ishag I. Chunde

JELD-WEN, INC.
31725 HIGHWAY 97 NORTH
CHILOQUIN, OR. 97624
PH. 541.783.2057

PRODUCT: DoorCraft® STEEL DOOR OUTSWING STEEL DOOR & HOLLOW METAL FRAME

PART OR ASSEMBLY: ANCHORING LOCATIONS & DETAILS

REVISIONS

NO.	DATE		BY
4	05/20/02	GENERAL REVISION	TJH
3	05/13/02	GENERAL REVISION	TJH
2	03/12/02	GENERAL REVISION	TJH
1	12/04/01	GENERAL REVISION	TJH

RW BUILDING CONSULTANTS, INC.
813.684.3831

DATE: 12/01/00
SCALE: N.T.S.
DWG. BY: TJH
CHK. BY: RW
DRAWING NO.: S-2074
SHEET 6 OF 8

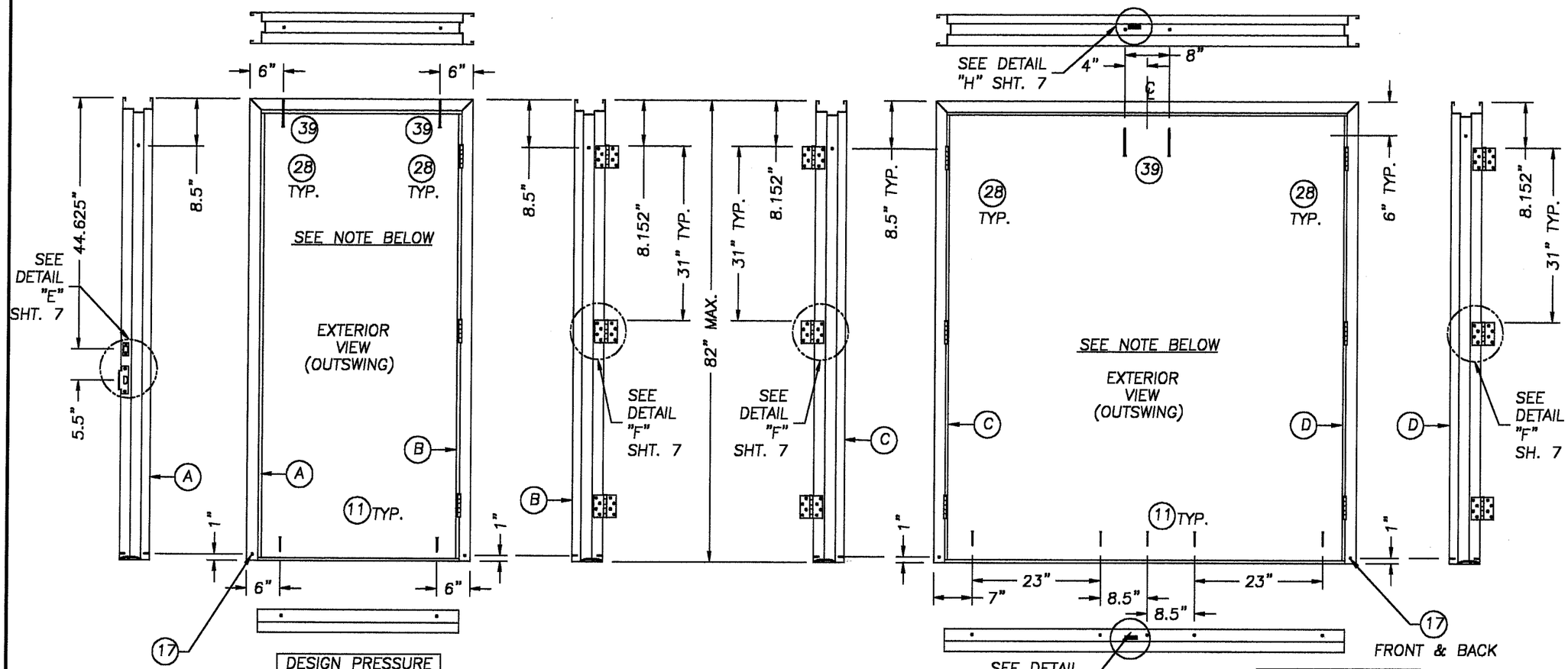

DESIGN PRESSURE	
EXT.	+55 psf
INT.	−55 psf

NOTE:
STRUCTURAL WOOD OR STEEL MEMBERS MUST CARRY 142 #/ft LOAD AND THE STRUCTURAL MEMBERS MUST BE VERIFIED BY THE APPROPRIATE OFFICIAL.

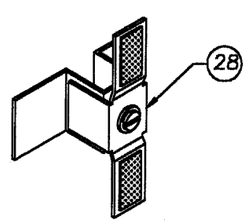

DRYWALL COMPRESSION ANCHOR
(1) REQ'D PER JAMB AT TOP
SECURE BOTTOM OF EACH JAMB
W/(2) ITEM #17 SCREW (#8 x 2 1/2")
FRONT AND BACK

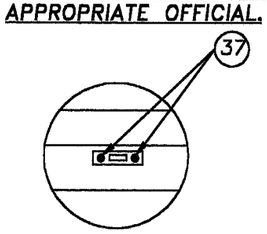

DETAIL "H"
SURFACE BOLT STRIKE
PLATE TO HEADER

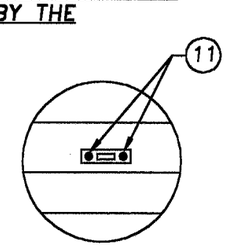

DETAIL "J"
SURFACE BOLT STRIKE
PLATE TO THRESHOLD

DESIGN PRESSURE	
EXT.	+55 psf
INT.	−55 psf

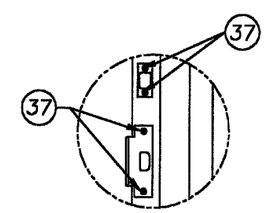

DETAIL "E"
STRIKE PLATE & DEADBOLT PLATE
TO FRAME OR ASTRAGAL

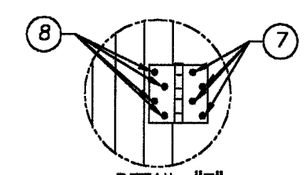

DETAIL "F"
HINGE TO JAMB & DOOR

Approved as complying with the Florida Buiding Code
Date JUNE 13, 2002
NOA# 01-0122.11
Miami Dade Product Control Division
By Ishaq I. Chande

JELD-WEN, INC.
31725 HIGHWAY 97 NORTH
CHILOQUIN, OR. 97624
PH. 541.783.2057

PRODUCT: DoorCraft® STEEL DOOR OUTSWING STEEL DOOR & HOLLOW METAL FRAME

PART OR ASSEMBLY: ANCHORING LOCATIONS, DETAILS & ANCHORS

REVISIONS

NO.	DATE		BY
3	05/20/02	GENERAL REVISION	TJH
3	05/13/02	GENERAL REVISION	TJH
2	03/12/02	GENERAL REVISION	TJH
1	12/04/01	GENERAL REVISION	TJH

RW BUILDING CONSULTANTS, INC.
813.684.3831

DATE: 12/05/00
SCALE: N.T.S.
DWG. BY: TJH
CHK. BY: RW
DRAWING NO.: S-2074
SHEET 7 OF 8

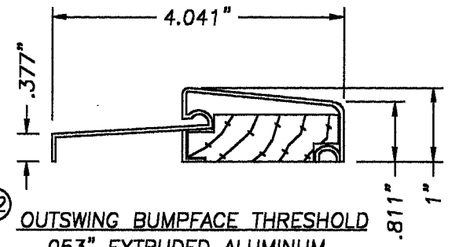

(12) OUTSWING BUMPFACE THRESHOLD
.053" EXTRUDED ALUMINUM
SCALE: 1/2" = 1"
(FOR SINGLE DOOR UNIT ONLY)

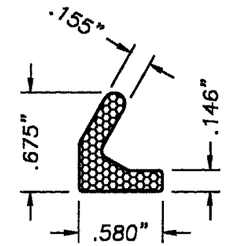

(34) FRAME WEATHERSRTIP
SCHLEGEL Q-LON QDST675

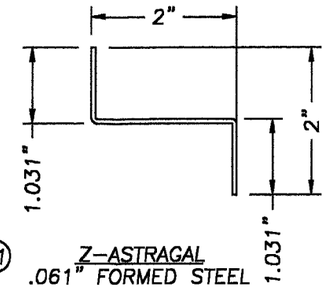

(21) Z-ASTRAGAL
.061" FORMED STEEL

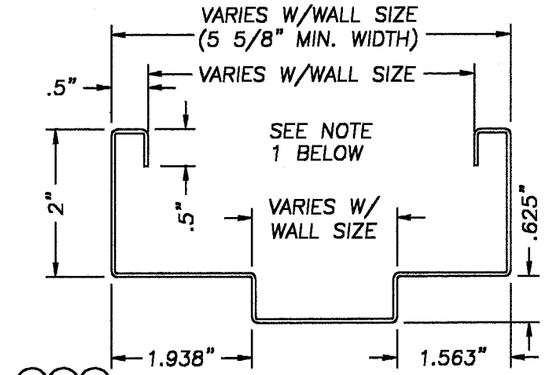

(2)(3)(4)
(43)(44)(45)

STEEL FRAME PROFILE
16GA. STEEL KEWANEE & FLEMING

NOTE:
1. WHEN THE MASONRY T-ANCHOR IS USED THE RETURN LEG ON THE FRAME MUST BE 0.25" MAXIMUM OR THE T-ANCHOR MUST BE NOTCHED 0.25".

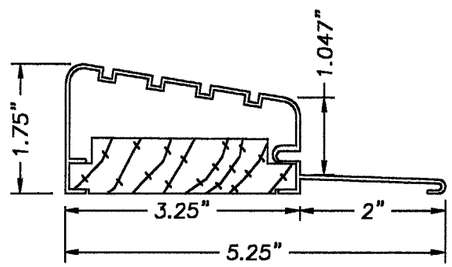

(5) OUTSWING HIGH DAM THRESHOLD
.053" EXTRUDED ALUMINUM
SCALE: 1/2" = 1"

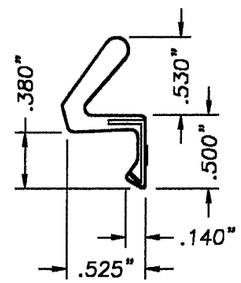

(13) THRESHOLD WEATHERSRTIP
SCHLEGEL Q-LON QDS650
SCALE: FULL

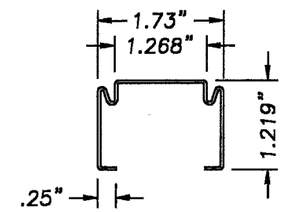

(14)(16) DOOR STEEL EDGE CAP,
TOP, LATCH STILE & HINGE STILE
.040" ROLL FORMED STEEL

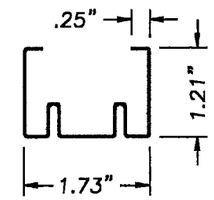

(15) DOOR STEEL EDGE CAP, BOTTOM
.040" ROLL FORMED STEEL

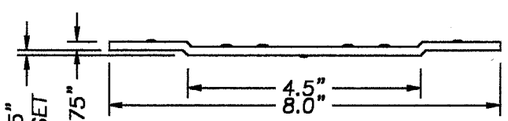

(32) FRAME HINGE REINFORCEMENT
KEWANEE FRAME 7GA. H.R.S.

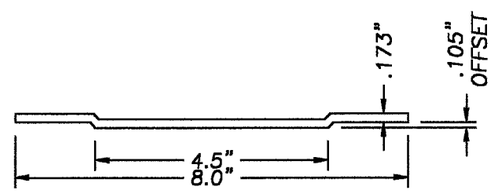

(32) FRAME HINGE REINFORCEMENT
FLEMING FRAME 7GA. C.R.S.

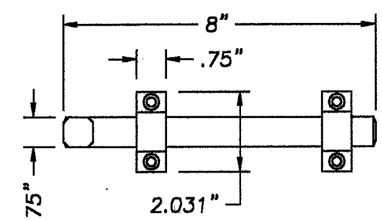

(41) SURFACE BOLT (IVES, .25" STEEL MODEL 455)

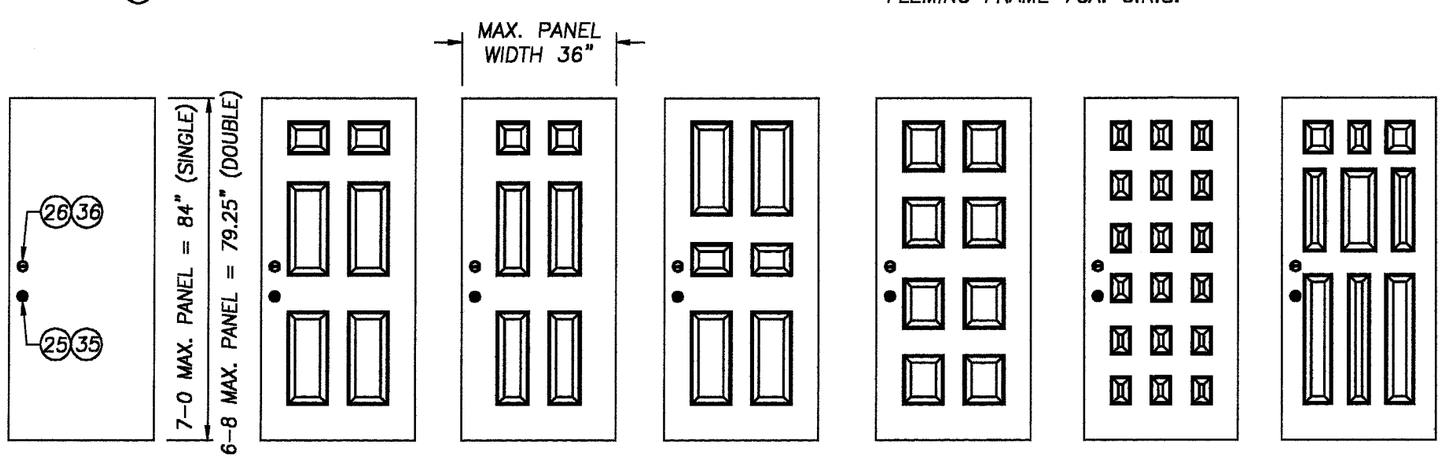

DoorCraft® Steel Door 7-0 & 6-8 DOOR MODELS (INTERIOR VIEW)

Approved as complying with the Florida Buiding Code
Date JUNE 13,2002
NOA# 01-0122.11
Miami Dade Product Control Division
By Ishaq I. Chanda

JELD-WEN, INC.
31725 HIGHWAY 97 NORTH
CHILOQUIN, OR. 97624
PH. 541.783.2057

PRODUCT: DoorCraft® Steel Door OUTSWING STEEL DOOR & HOLLOW METAL FRAME

PART OR ASSEMBLY: FRAME COMPONENTS & DOOR MODELS

NO.	DATE		BY
4	05/20/02	GENERAL REVISION	TJH
3	05/13/02	GENERAL REVISION	TJH
2	03/12/02	GENERAL REVISION	TJH
1	12/04/01	GENERAL REVISION	TJH

REVISIONS

RW BUILDING CONSULTANTS, INC.
813.684.3831

DATE: 12/01/00
SCALE: N.T.S.
DWG. BY: TJH
CHK. BY: RW
DRAWING NO.: S-2074
SHEET 8 OF 8