MIAMI-DADE

MIAMI-DADE COUNTY, FLORIDA
METRO-DADE FLAGLER BUILDING

BUILDING CODE COMPLIANCE OFFICE
METRO-DADE FLAGLER BUILDING
140 WEST FLAGLER STREET, SUITE 1603
MIAMI, FLORIDA 33130-1563
(305) 375-2901 FAX (305) 375-2908

CONTRACTOR LICENSING SECTION
(305) 375-2527 FAX (305) 375-2558

CONTRACTOR ENFORCEMENT DIVISION
(305) 375-2966 FAX (305) 375-2908

PRODUCT CONTROL DIVISION
(305) 375-2902 FAX (305) 372-6339

PRODUCT CONTROL NOTICE OF ACCEPTANCE

Pella Corporation
102 Main Street
Pella ,IA 50219

Your application for Notice of Acceptance (NOA) of:
Aluminum Clad Outswing Wood French Door with Sidelites - Impact Resistant
under Chapter 8 of the Code of Miami-Dade County governing the use of Alternate Materials and Types of Construction, and completely described herein, has been recommended for acceptance by the Miami-Dade County Building Code Compliance Office (BCCO) under the conditions specified herein.

This NOA shall not be valid after the expiration date stated below. BCCO reserves the right to secure this product or material at any time from a jobsite or manufacturer's plant for quality control testing. If this product or material fails to perform in the approved manner, BCCO may revoke, modify, or suspend the use of such product or material immediately. BCCO reserves the right to revoke this approval, if it is determined by BCCO that this product or material fails to meet the requirements of the South Florida Building Code.

The expense of such testing will be incurred by the manufacturer.

ACCEPTANCE NO.: 01-0124.05
EXPIRES: 12/09/2002

Raul Rodriguez
Chief Product Control Division

THIS IS THE COVERSHEET, SEE ADDITIONAL PAGES FOR SPECIFIC AND GENERAL CONDITIONS
BUILDING CODE & PRODUCT REVIEW COMMITTEE

This application for Product Approval has been reviewed by the BCCO and approved by the Building Code and Product Review Committee to be used in Miami-Dade County, Florida under the conditions set forth above.

Francisco J. Quintana, R.A.
Director
Miami-Dade County
Building Code Compliance Office

APPROVED: 11/15/2001

Pella Corporation

ACCEPTANCE No.: **01-0124.05**

APPROVED : NOV 1 5 2001

EXPIRES : **December 09, 2002**

NOTICE OF ACCEPTANCE: SPECIFIC CONDITIONS

1. SCOPE

1.1 This **revises** the Notice of Acceptance No. **99-0712.02**, which was issued on December 09, 1999. It approves an aluminum clad outswing wood French door with Sidelites, as described in Section 2 of this Notice of Acceptance, designed to comply with the South Florida Building Code, 1994 Edition for Miami-Dade County, for the locations where the pressure requirements, as determined by SFBC Chapter 23, do not exceed the Design Pressure Rating values indicated in the approved drawings.

2. PRODUCT DESCRIPTION

2.1 The **Aluminum Clad Outswing Wood French Door with Sidelites – Impact Resistant**, and its components shall be constructed in strict compliance with the following documents: Drawing No. **1035**, Sheet 1 through 5 of 5, titled "Aluminum Clad Outswing French Doors," prepared by W. W. Schaefer Engineering & Consulting, P.A., dated 1/05/01, signed and sealed by Warren W. Schaefer, bearing the Miami-Dade County Product Control Approval stamp with the Notice of Acceptance number and approval date by the Miami-Dade County Product Control Division. These documents shall hereinafter be referred to as the approved drawings.

3. LIMITATIONS

3.1 This approval applies to single unit applications of pair of doors and single door with and without sidelites, as shown in approved drawings. Single door units shall include all components described in the active leaf of this approval.

4. INSTALLATION

4.1 The aluminum clad outswing wood French door with Sidelites and its components shall be installed in strict compliance with the approved drawings.

4.2 The installation of this product **will not require** a hurricane protection system.

5. LABELING

5.1 Each panel shall bear a permanent label with the manufacturer's name or logo, city, state and following statement: "Miami-Dade County Product Control Approved".

6. BUILDING PERMIT REQUIREMENTS

6.1 Application for building permit shall be accompanied by copies of the following:

- **6.1.1** This Notice of Acceptance.
- **6.1.2** Duplicate copies of the approved drawings, as identified in Section 2 of this Notice of Acceptance, clearly marked to show the components selected for the proposed installation.
- **6.1.3** Any other documents required by the Building Official or the South Florida Building Code (SFBC) in order to properly evaluate the installation of this system.

Manuel Perez

Manuel Perez, P.E. Product Control Examiner
Product Control Division

Pella Corporation

ACCEPTANCE No.: **01-0124.05**

APPROVED : NOV 1 5 2001

EXPIRES : **December 09, 2002**

NOTICE OF ACCEPTANCE: STANDARD CONDITIONS

1. Renewal of this Acceptance (approval) shall be considered after a renewal application has been filed and the original submitted documentation, including test supporting data, engineering documents, are no older than eight (8) years.

2. Any and all approved products shall be permanently labeled with the manufacturer's name, city, state, and the following statement: "Miami-Dade County Product Control Approved", or as specifically stated in the specific conditions of this Acceptance.

3. Renewals of Acceptance will not be considered if:
   a) There has been a change in the South Florida Building Code affecting the evaluation of this product and the product is not in compliance with the code changes;
   b) The product is no longer the same product (identical) as the one originally approved;
   c) If the Acceptance holder has not complied with all the requirements of this acceptance, including the correct installation of the product;
   d) The engineer who originally prepared, signed and sealed the required documentation initially submitted is no longer practicing the engineering profession.

4. Any revision or change in the materials, use, and/or manufacture of the product or process shall automatically be cause for termination of this Acceptance, unless prior written approval has been requested (through the filing of a revision application with appropriate fee) and granted by this office.

5. Any of the following shall also be grounds for removal of this Acceptance:
   a) Unsatisfactory performance of this product or process.
   b) Misuse of this Acceptance as an endorsement of any product, for sales, advertising or any other purpose.

6. The Notice of Acceptance number preceded by the words Miami-Dade County, Florida, and followed by the expiration date may be displayed in advertising literature. If any portion of the Notice of Acceptance is displayed, then it shall be done in its entirety.

7. A copy of this Acceptance as well as approved drawings and other documents, where it applies, shall be provided to the user by the manufacturer or its distributors and shall be available for inspection at the job site at all time. The engineer need not reseal the copies.

8. Failure to comply with any section of this Acceptance shall be cause for termination and removal of Acceptance.

9. This Notice of Acceptance consists of pages 1, 2 and this last page 3.

END OF THIS ACCEPTANCE

Manuel Perez, P.E., Product Control Examiner
Product Control Division

Pella Corporation

ACCEPTANCE No.: **01-0124.05**

APPROVED : NOV 1 5 2001

EXPIRES : **December 09, 2002**

NOTICE OF ACCEPTANCE: EVIDENCE SUBMITTED

(For File ONLY. Not part of NOA.)

A. DRAWINGS

1. Manufacturer's die drawings and sections.
2. Drawing No. **1035**, Sheet 1 through 5 of 5, titled "Aluminum Clad Outswing French Doors," prepared by W. W. Schaefer Engineering & Consulting, P.A., dated 1/05/01, signed and sealed by Warren W. Schaefer, P.E..

B. TESTS

1. Test reports on 1) Air Infiltration Test, per SFBC PA 202-94
   2) Uniform Static Air Pressure Test, Loading per SFBC PA 202-94
   3) Water Resistance Test, per SFBC PA 202-94
   4) Large Missile Impact Test per SFBC, PA 201-94
   5) Cyclic Wind Pressure Loading per SFBC, PA 203-94
) Forced Entry Test, per SFBC 3603.2 (b) and PA 202-94

   along with marked-up drawings and installation diagram of an aluminum clad outswing French door with Sidelites, prepared by American Test Lab of South Florida, Test Report No. **ATL - 0622.01-99**, dated 08/09/99, tested on 6/22, 6/23, 6/24, 6/25, 6/30/99, signed and sealed by William R. Mehner, P.E.

C. CALCULATIONS

1. Anchor calculations prepared by Engineering Problem Description & Assumptions, dated 6/12/99, signed and sealed by Mark C. Fetherman, P.E.
2. Glass calculation per ASTM E-1300 prepared by W> W> Schaefer Engineering & Consulting, P.A., dated 9/7/01, signed and sealed by Warren W. Schaefer, P.E.

D. MATERIAL CERTIFICATIONS

1. Notice of Acceptance No. **98-0608.03** issued to E.I. DuPont DeNemours for "Sentry Glass Plus" dated 01/14/99, expiring on 01/14/02.

E. STATEMENTS

1. Statement letter of no financial interest, dated 12/5/00, signed by Warren W. Schaefer, P.E.
2. Laboratory compliance letter for Test Report no. **ATL-0622.01-99**, issued by American Test Lab of South Florida, dated August 9, 1999, signed and sealed by Mark Fetherman, P.E.
3. Statement letter of conformance, dated August 9, 1999, signed and sealed by Mark Fetherman, P.E.

F. OTHERS

1. Notice of Acceptance No. **99-0712.02** issued to Pella Windows/Robert Hunt Corp. for their Aluminum Clad Outswing Wood French Door w/Sidelites, dated 12/09/99, expiring on 12/09/02.

Manuel Perez

Manuel Perez, P.E. Product Control Examiner
Product Control Division

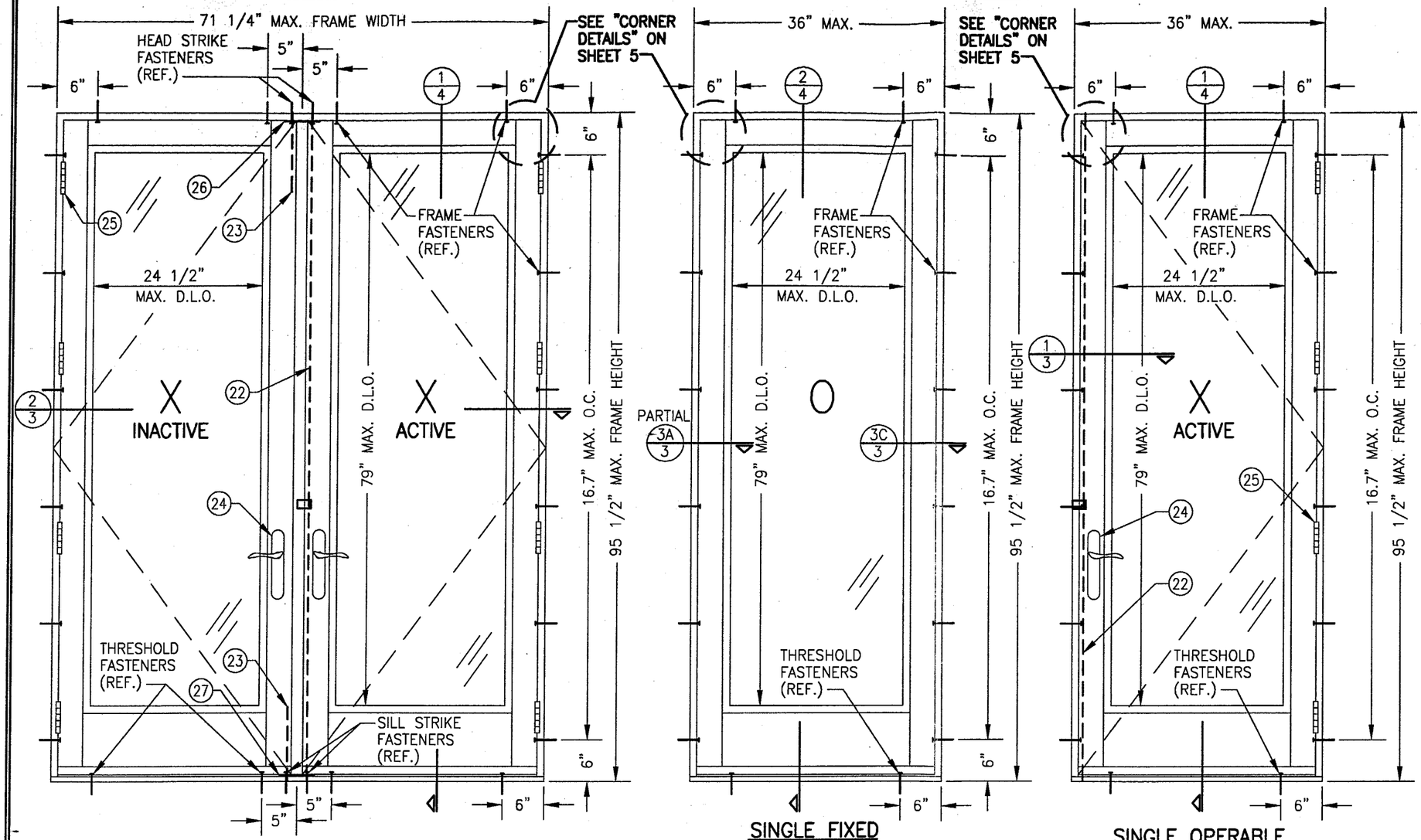

ALLOWABLE DESIGN LOAD

POSITIVE	NEGATIVE
70 PSF	75 PSF

TYP. FOR ALL SINGLE & MULTIPLE DOOR UNITS.

HINGE TABLE

DOOR FRAME HEIGHT	MINIMUM NO. HINGES REQUIRED
82" OR LESS	3
83" TO 95.5"	4

NOTES:
1. APPLICABLE FOR 4" & 8" HINGES.
2. HINGE LOCATIONS = 8 1/4" FROM TOP & BOTTOM RAIL CORNERS TO CENTER OF HINGE & EQUALLY SPACED BETWEEN.

GENERAL NOTES

1. THIS PRODUCT IS DESIGNED TO MEET THE SOUTH FLORIDA BUILDING CODE 1994 EDITION FOR MIAMI-DADE COUNTY.
2. WOOD BUCKS BY OTHERS, MUST BE ANCHORED PROPERLY TO TRANSFER LOADS TO THE STRUCTURE.
3. PRODUCT ANCHORS SHALL BE AS LISTED AS SPACED AS SHOWN ON DETAILS. ANCHOR EMBEDMENT TO BASE MATERIAL SHALL BE BEYOND WALL FINISH OR STUCCO.
4. IMPACT RESISTANT SHUTTERS NOT REQUIRED.
5. ALL DIMENSIONS ARE GIVEN IN INCHES UNLESS OTHERWISE SHOWN.
6. LATEX OR SILICONE CAULKING SEALANT SHALL BE USED BETWEEN ALUMINUM CLADDING AND WOOD BUCK.

EXTERIOR ELEVATIONS

PRODUCT DESCRIPTION

FRAME CONSTRUCTION:
SELECT SOFT WOOD, FINGER JOINTED WITH CLEAR PINE VENEER. EXTERIOR SURFACE CLAD WITH ALUMINUM. SOLID ALUMINUM EXTRUDED SILL.

PANEL CONSTRUCTION:
SELECT SOFT WOOD, FINGER JOINTED WITH CLEAR PINE VENEER. EXTERIOR SURFACES CLAD WITH ALUMINUM.

TYP. FRAME TO OPENING ANCHORS:

1. FRAME TO 2X_ BUCK: NO. 10 WOOD SCREWS WITH MIN. 1 3/8" BUCK EMBED SPACED PER ELEVATIONS.
2. HEAD STRIKE TO 2X_ BUCK: 4 NO. 8 F.H. S.S. WOOD SCREWS THROUGH FRAME & MIN. 1 1/4" INTO BUCK.
3. SILL STRIKE TO 2X_ BUCK: 2 NO. 10 F.H. S.S. WOOD SCREWS THROUGH OUTER SILL & INTO BUCK MIN. 1 3/8".
4. THRESHOLD TO 2X_ BUCK: NO. 10 S.S. WOOD SCREWS WITH MIN. 1 3/8" BUCK EMBED SPACED PER ELEVATIONS.
5. HINGES TO 2X_ BUCK: 2 NO. 12 S.S. WOOD SCREWS WITH MIN. 1 3/8" BUCK EMBED.
6. FRAME, STRIKES, THRESHOLD & HINGES TO BLOCK/CONCR.: 3/16" TAPCONS REPLACE NO. 8 & 10 SCREWS; 1/4" TAPCON REPLACES NO. 12 SCREWS. (ALL WITH MIN 1 1/4" BLOCK/ CONCRETE EMBED)

APPROVED AS COMPLYING WITH THE SOUTH FLORIDA BUILDING CODE
DATE NOV 15 2001
BY Manuel Perez
PRODUCT CONTROL DIVISION
BUILDING CODE COMPLIANCE OFFICE
ACCEPTANCE NO 01-0124.05

NO.	REVISION DESCRIPTION	BY	DATE

DRAWN BY: W.W.S. | CHECKED BY: W.W.S.
PLOT: 1=16 | DATE: 01/05/01

DRAWING TITLE: ALUMINUM CLAD OUTSWING FRENCH DOORS

MANUFACTURER: PELLA CORPORATION
102 MAIN STREET
PELLA, IA 50219
641-621-1000

CONSULTANTS: W. W. SCHAEFER ENGINEERING & CONSULTING, P.A.
600 SANDTREE DRIVE; SUITE 203B
PALM BEACH GARDENS, FL 33403
PHONE: 561-775-4902 FAX: 561-775-4903

CERTIFICATION: SEP 07 2001
WARREN W. SCHAEFER, P.E.
P.E. NO. 44135

DRAWING NO. 1035 | REV.

SHEET NO. 1 OF 5

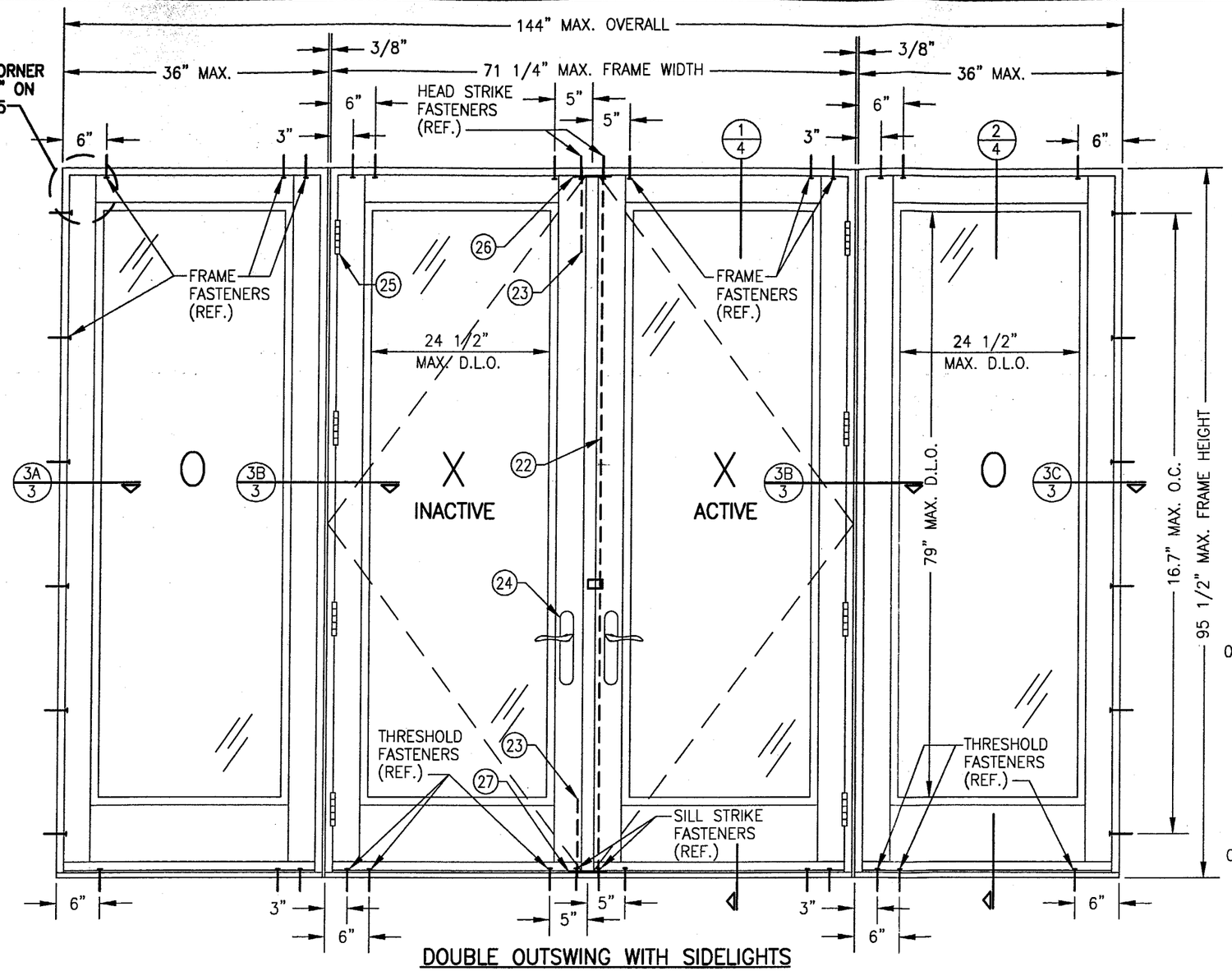

DOUBLE OUTSWING WITH SIDELIGHTS

MAXIMUM COMBINATION OF 4 PANELS
(PANELS MAY BE ANY COMBINATION OF ACTIVE OR INACTIVE)

EXTERIOR ELEVATIONS

FOR FASTENER, HINGE AND DESIGN LOAD INFORMATION, SEE SHEET 1.

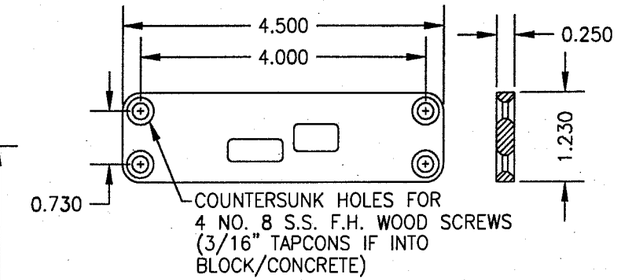

(26) **HEAD STRIKE**
6063-T6 ALUMINUM

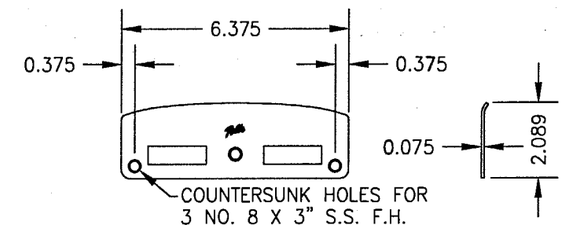

(28) **JAMB STRIKE**
BRASS

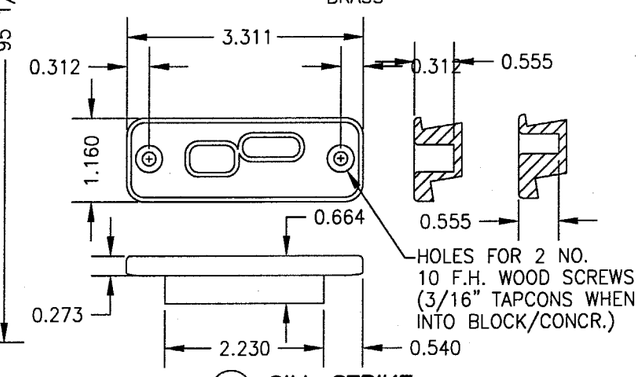

(27) **SILL STRIKE**
6063-T6 ALUMINUM

STRIKE DETAILS

APPROVED AS COMPLYING WITH THE SOUTH FLORIDA BUILDING CODE
DATE NOV 15 2001
BY Manuel Diaz
PRODUCT CONTROL DIVISION
BUILDING CODE COMPLIANCE OFFICE
ACCEPTANCE NO 01-0124.05

DRAWN BY: W.W.S.	CHECKED BY: W.W.S.
PLOT: 1=16	DATE: 01/05/01

NO.	REVISION DESCRIPTION	BY	DATE

DRAWING TITLE
ALUMINUM CLAD OUTSWING FRENCH DOORS

MANUFACTURER
PELLA CORPORATION
102 MAIN STREET
PELLA, IA 50219
641-621-1000

CONSULTANTS
W. W. SCHAEFER ENGINEERING & CONSULTING, P.A.
600 SANDTREE DRIVE; SUITE 203B
PALM BEACH GARDENS, FL 33403
PHONE: 561-775-4902 FAX: 561-775-4903

CERTIFICATION
SEP 07 2001
WARREN W. SCHAEFER, P.E.
P.E. NO. 44135

DRAWING NO. 1035
REV.
SHEET NO. 2 OF 5

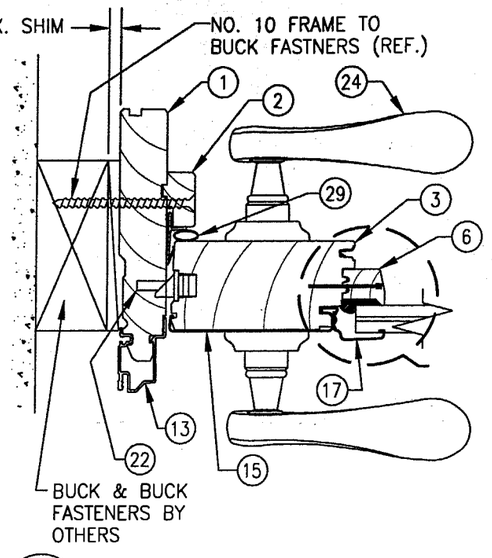

1/3 HORIZONTAL CROSS SECTION
SINGLE OUTSWING LOCKING STILE

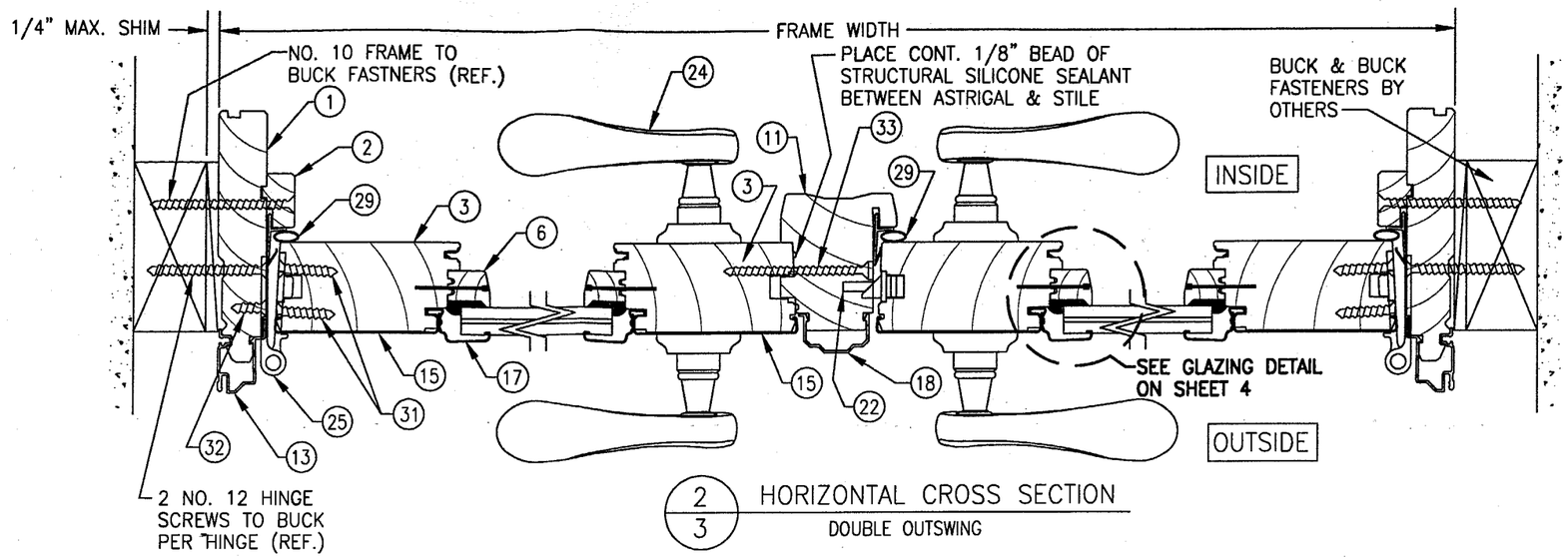

2/3 HORIZONTAL CROSS SECTION
DOUBLE OUTSWING

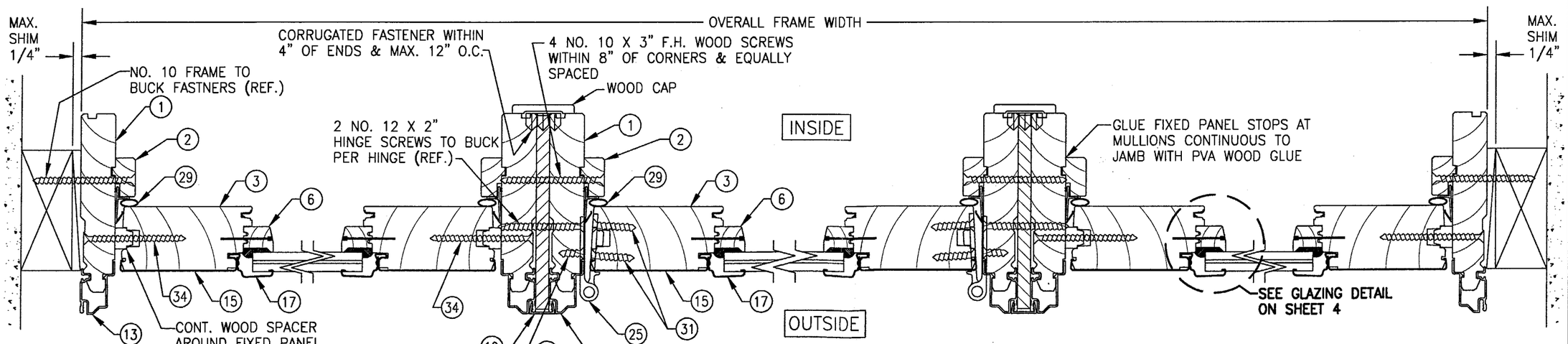

3A/3 CROSS SECTION
FIXED PANEL JAMB

3B/3 HORIZONTAL CROSS SECTION
DOUBLE OUTSWING W/FIXED PANELS

3C/3 CROSS SECTION
FIXED PANEL JAMB

RIGHT & LEFT SIDES ARE TYPICAL

(FOR DETAIL OF ASTRIGAL & MEETING STILES, SEE SECTION 2/3)

APPROVED AS COMPLYING WITH THE SOUTH FLORIDA BUILDING CODE
DATE NOV 15 2001
BY
PRODUCT CONTROL DIVISION
BUILDING CODE COMPLIANCE OFFICE
ACCEPTANCE NO. 01-0124.05

DRAWN BY: W.W.S.	CHECKED BY: W.W.S.
PLOT: 1=3	DATE: 01/05/01

NO.	REVISION DESCRIPTION	BY	DATE

DRAWING TITLE: ALUMINUM CLAD OUTSWING FRENCH DOORS

MANUFACTURER: PELLA CORPORATION, 102 MAIN STREET, PELLA, IA 50219, 641-621-1000

CONSULTANTS: W. W. SCHAEFER ENGINEERING & CONSULTING, P.A.
600 SANDTREE DRIVE; SUITE 203B
PALM BEACH GARDENS, FL 33403
PHONE: 561-775-4902 FAX: 561-775-4903

CERTIFICATION: SEP 07 2001
WARREN W. SCHAEFER, P.E.
P.E. NO. 44135

DRAWING NO. 1035 REV.

SHEET NO. 3 OF 5

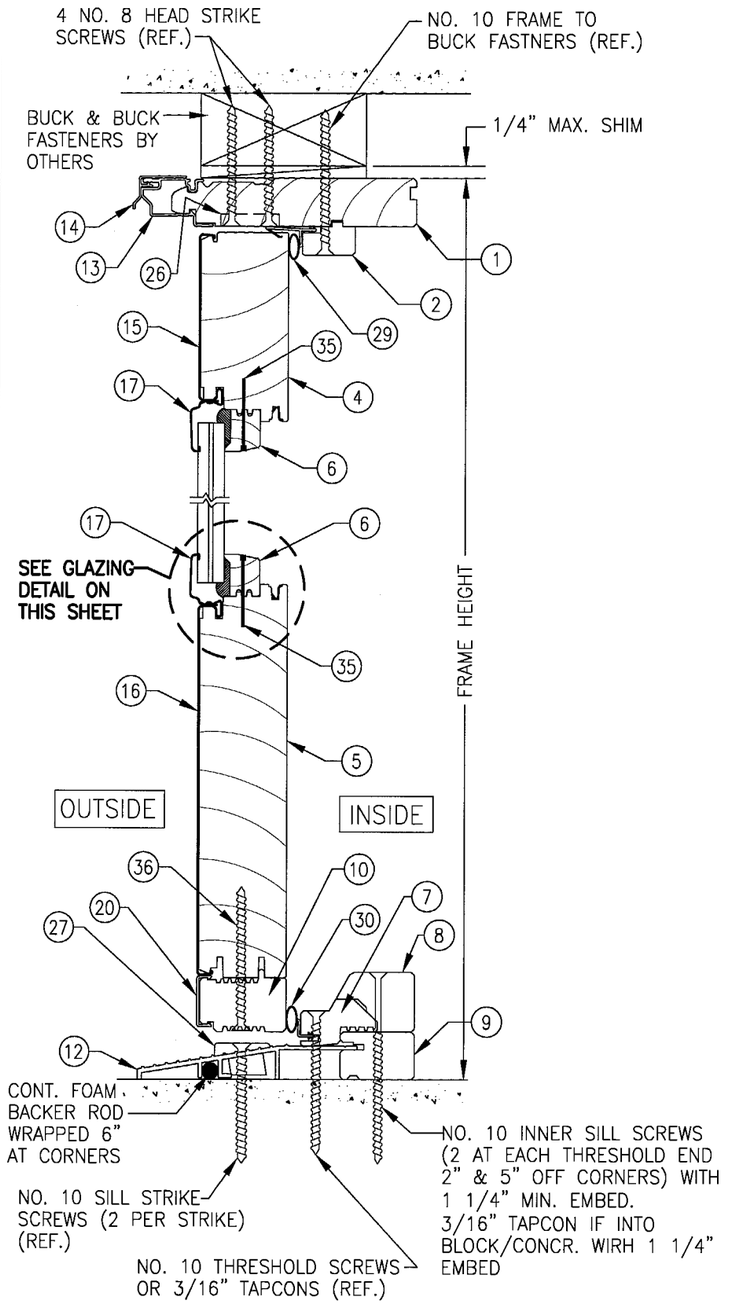

1/4 VERTICAL CROSS SECTION
OUTSWING DOOR

CONTINUOUS S.S. BAR AT TOP & BOTTOM OF PANEL NOT SHOWN FOR CLARITY. SEE SHEET 5 FOR DETAILS OF BARS.

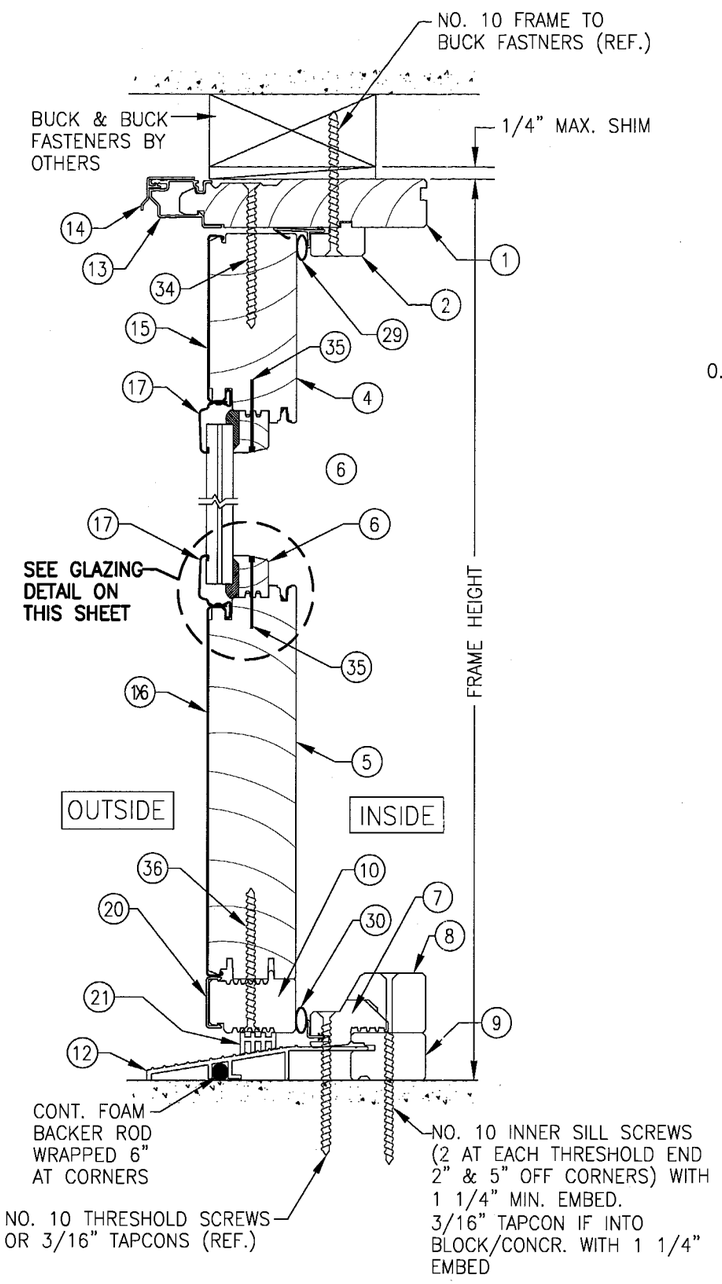

2/4 VERTICAL CROSS SECTION
FIXED DOOR

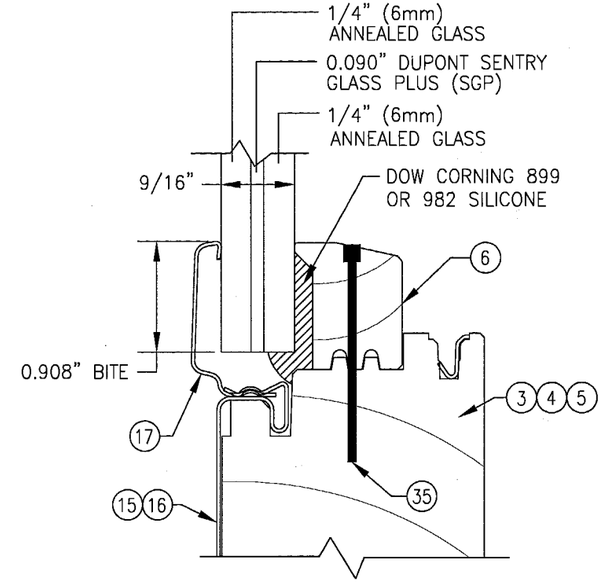

GLAZING DETAIL

APPROVED AS COMPLYING WITH THE SOUTH FLORIDA BUILDING CODE
DATE NOV 15 2001
BY Manuel Perez
PRODUCT CONTROL DIVISION
BUILDING CODE COMPLIANCE OFFICE
ACCEPTANCE NO. 01-0124.05

DRAWN BY: W.W.S.	CHECKED BY: W.W.S.
PLOT: 1=3	DATE: 01/05/01

NO.	REVISION DESCRIPTION	BY	DATE

DRAWING TITLE: ALUMINUM CLAD OUTSWING FRENCH DOORS

MANUFACTURER: PELLA CORPORATION
102 MAIN STREET
PELLA, IA 50219
641-621-1000

CONSULTANTS: W. W. SCHAEFER ENGINEERING & CONSULTING, P.A.
600 SANDTREE DRIVE, SUITE 203B
PALM BEACH GARDENS, FL 33403
PHONE: 561-775-4902 FAX: 561-775-4903

CERTIFICATION
SEP 07 2001
WARREN W. SCHAEFER, P.E.
P.E. NO. 44135

DRAWING NO. 1035
REV.
SHEET NO. 4 OF 5

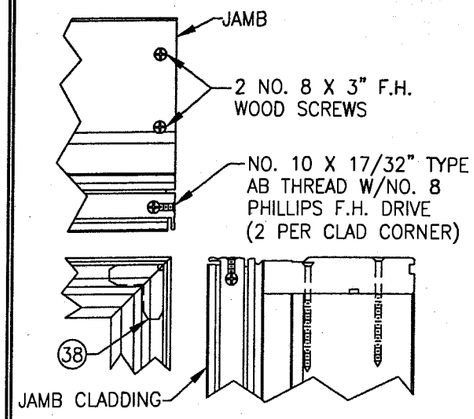

JAMB CORNER DETAIL

CORNER SEALED WITH 1/4" BEAD OF SILICONE ADHESIVE

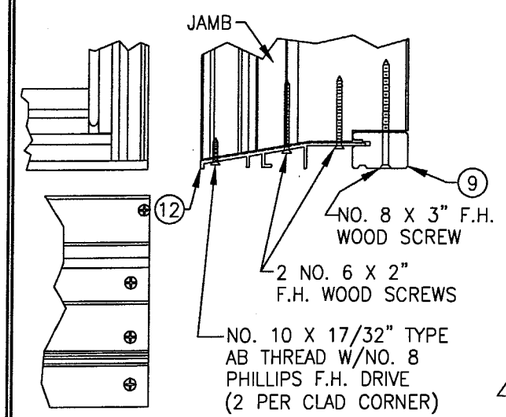

JAMB TO SILL CORNER DETAIL

CORNER SEALED WITH 1/4" BEAD OF SILICONE ADHESIVE & BUTYL TAPE

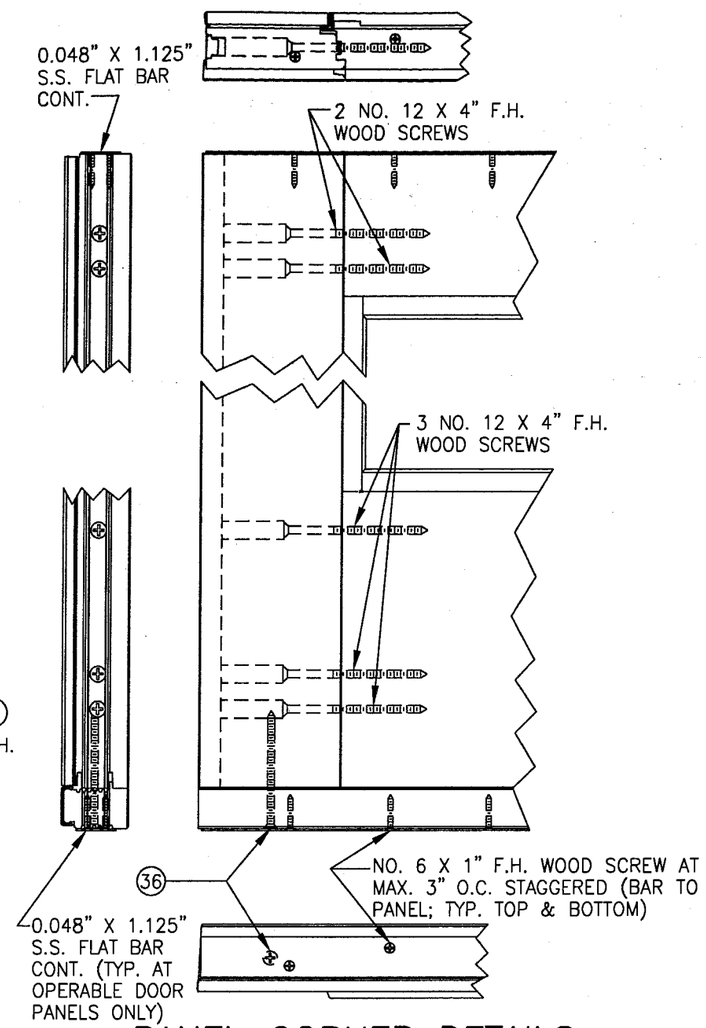

PANEL CORNER DETAILS

CORNERS SEALED WITH 1/8" BEAD OF POLYURETHANE SEALANT/ADHESIVE

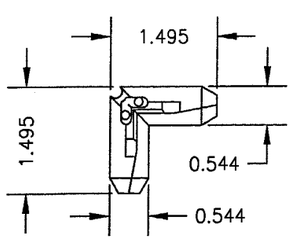

CORNER KEY

BILL OF MATERIALS

ITEM #	ITEM DESCRIPTION	MANUFACTURER/NOTES
	PARTS	
1	JAMB/FRAME MEMBER (5.189X0.998)	WESTERN PINE
2	PANEL STOP (1.122X0.592)	WESTERN PINE
3	STILE (3.84X1.839)	WESTERN PINE
4	TOP RAIL (3.911X1.839)	WESTERN PINE
5	BOTTOM RAIL (8.172X1.839)	WESTERN PINE
6	INTERIOR GLAZING STOP (0.75X0.873)	WESTERN PINE
7	THRESHOLD (1.621X0.997)	WESTERN PINE
8	THRESHOLD EXTENSION (1.636X1.247)	WESTERN PINE
9	INNER SILL (1.558X0.997)	WESTERN PINE
10	BOTTOM RAIL PANEL FILLER (1.816X1.122)	WESTERN PINE
11	ASTRIGAL (2.817X2.394)	WESTERN PINE
12	OUTER SILL (4.629X1.652X0.09 THK.)	6063-T6 ALUMINUM
13	JAMB/FRAME CLADDING (1.539X0.996X0.045 THK.)	6063-T6 ALUMINUM
14	HEAD DRIP CAP (1.126X0.685X0.04 THK.)	6063-T6 ALUMINUM
15	STILE & TOP RAIL CLADDING (3.44X0.5X0.235 THK.)	3003-H14 ALUMINUM
16	BOTTOM RAIL CLADDING (7.682X0.5X0.0235 THK.)	3003-H14 ALUMINUM
17	GLAZING BEAD (0.594X1.069X0.0235 THK.)	3003-H14 ALUMINUM
18	ASTRIGAL COVER (1.345X0.81X0.047 THK.)	6063-T6 ALUMINUM
19	MULLION COVER (0.734X0.327X0.047 THK)	6063-T6 ALUMINUM
20	PANEL FILLER COVER (0.319X1.059X0.04 THK.)	3003-H14 ALUMINUM
21	SILL SHIM	SEMI-RIGID PVC
	HARDWARE	
22	3-POINT LOCKING SYSTEM	BY GU HARDWARE FOR PELLA
23	FLUSH BOLT	TOP & BOT. BY GU HARDWARE FOR PELLA
24	HANDLE ASSEMBLY	BY CIFAL FOR PELLA
25	4 1/2" 6063-T6 ALUM HINGE	BY PELLA (WITH S.S. PIN)
26	HEAD STRIKE PLATE	6063-T6 ALUMINUM
27	SILL STRIKE PLATE	6063-T6 ALUMINUM
28	JAMB STRIKE PLATE	BRASS
	SEALS & SEALANTS	
29	JAMB & ASTRIGAL WEATHERSTRIP	PVC
30	SILL WEATHERSTRIP	PVC
	MISCELLANEOUS FASTENERS	
31	4 NO. 12 S.S. HINGE SCREWS	HINGE TO STILE
32	2 NO. 12 S.S. HINGE SCREWS	HINGE TO JAMB
33	4 NO. 8 X 3" S.S. F.H. WOOD SCREW	ASTRIGAL TO INACTIVE PANEL; WITHIN 3" OF ENDS & EQUALLY SPACED
34	NO. 8 X 3" S.S. F.H. WOOD SCREWS	JAMB TO FIXED PANEL; WITHIN 4" OF CORNERS & MAX. 8" O.C.
35	0.11" X 1 1/2" RING SHANK NAIL	INTERIOR GLAZING STOP TO PANEL; WITHIN 3" OF CORNERS & MAX. 8" O.C.
36	4 NO. 10 X 3 1/4" S.S. F.H. WS	2" FROM CORNERS & EQ. SPACED
	OTHER	
37	ALUMINUM SNAP-ON JAMB CLAD FIN	OPTIONAL
38	JAMB CLAD CORNER KEY	NYLON

APPROVED AS COMPLYING WITH THE SOUTH FLORIDA BUILDING CODE
DATE NOV 15 2001
BY Manuel Perez
PRODUCT CONTROL DIVISION
BUILDING CODE COMPLIANCE OFFICE
ACCEPTANCE NO. 01-0124.05

DRAWN BY: W.W.S.	CHECKED BY: W.W.S.
PLOT: 1=16	DATE: 01/05/01

NO.	REVISION DESCRIPTION	BY	DATE

DRAWING TITLE: ALUMINUM CLAD OUTSWING FRENCH DOORS

MANUFACTURER: PELLA CORPORATION, 102 MAIN STREET, PELLA, IA 50219, 641-621-1000

CONSULTANTS: W. W. SCHAEFER ENGINEERING & CONSULTING, P.A.
600 SANDTREE DRIVE; SUITE 203B
PALM BEACH GARDENS, FL 33403
PHONE: 561-775-4902 FAX: 561-775-4903

CERTIFICATION: SEP 07 2001
WARREN W. SCHAEFER, P.E.
P.E. NO. 44135

DRAWING NO. 1035 REV.

SHEET NO. 5 OF 5