MIAMI-DADE COUNTY, FLORIDA
METRO-DADE FLAGLER BUILDING

BUILDING CODE COMPLIANCE OFFICE
METRO-DADE FLAGLER BUILDING
140 WEST FLAGLER STREET, SUITE 1603
MIAMI, FLORIDA 33130-1563
(305) 375-2901 FAX (305) 375-2908

CONTRACTOR LICENSING SECTION
(305) 375-2527 FAX (305) 375-2558

CONTRACTOR ENFORCEMENT DIVISION
(305) 375-2966 FAX (305) 375-2908

PRODUCT CONTROL DIVISION
(305) 375-2902 FAX (305) 372-6339

PRODUCT CONTROL NOTICE OF ACCEPTANCE

Kawneer Company, Inc.
555 Guthridge Court
Norcros ,GA 30092

Your application for Notice of Acceptance (NOA) of:
Series TRIFAB 450 Flush Glazed Aluminum Storefront System
under Chapter 8 of the Code of Miami-Dade County governing the use of Alternate Materials and Types of Construction, and completely described herein, has been recommended for acceptance by the Miami-Dade County Building Code Compliance Office (BCCO) under the conditions specified herein.

This NOA shall not be valid after the expiration date stated below. BCCO reserves the right to secure this product or material at any time from a jobsite or manufacturer's plant for quality control testing. If this product or material fails to perform in the approved manner, BCCO may revoke, modify, or suspend the use of such product or material immediately. BCCO reserves the right to revoke this approval, if it is determined by BCCO that this product or material fails to meet the requirements of the South Florida Building Code.

The expense of such testing will be incurred by the manufacturer.

ACCEPTANCE NO.: 01-0124.11
EXPIRES: 02/12/2006

Raul Rodriguez
Chief Product Control Division

THIS IS THE COVERSHEET, SEE ADDITIONAL PAGES FOR SPECIFIC AND GENERAL CONDITIONS
BUILDING CODE & PRODUCT REVIEW COMMITTEE

This application for Product Approval has been reviewed by the BCCO and approved by the Building Code and Product Review Committee to be used in Miami-Dade County, Florida under the conditions set forth above.

Francisco J. Quintana, R.A.
Director
Miami-Dade County
Building Code Compliance Office

APPROVED: 03/22/2001

Kawneer Company,Inc.

ACCEPTANCE No.: **01-0124.11**

APPROVED : MAR 2 2 2001

EXPIRES : **February 12, 2006**

NOTICE OF ACCEPTANCE: SPECIFIC CONDITIONS

1. DESCRIPTION OF UNIT

1.1 This **renews** the Notice of Acceptance No. **96-1206.04**, which was issued on February 12, 1998. It approves an aluminum flush glazed storefront system, as described in Section 2 of this Notice of Acceptance, designed to comply with the South Florida Building Code (SFBC), 1994 Edition for Miami-Dade County, for the locations where the pressure requirements, as determined by SFBC Chapter 23, do not exceed the Design Pressure Rating values indicated in the approved drawings.

2. PRODUCT DESCRIPTION

2.1 The **Series TRIFAB 450 Flush Glazed Aluminum Storefront System** and its components shall be constructed in strict compliance with the following documents: Drawing No **J702-DC** titled "TRIFAB 450-SCREW SPLINE" Sheets 1 through 5 of 5 dated 12/02/96, with revision 3 dated 3/2/01, prepared by manufacturer, bearing the Miami-Dade County Product Control approval stamp with the Notice of Acceptance number and approval date by the Miami-Dade County Product Control Division. These documents shall hereinafter be referred to as the approved drawings.

3. LIMITATIONS

3.1 This approval applies to multiple unit applications of an aluminum storefront system, limited only to the maximum height (span) and mullion spacing; for the Design Pressure Rating shown in approved drawing.

4. INSTALLATION

4.1 The aluminum storefront system and its components shall be installed in strict compliance with the approved drawings.

4.2 Hurricane protection system (shutters): the installation of this unit **will require** a hurricane protection system.

5. LABELING

5.1 Each unit shall bear a permanent label with the manufacturer's name or logo, city, state and following statement: "Miami-Dade County Product Control Approved".

6. BUILDING PERMIT REQUIREMENTS

6.1 Application for building permit shall be accompanied by copies of the following:

6.1.1 This Notice of Acceptance

6.1.2 Duplicate copies of the approved drawings, as identified in Section 2 of this Notice of Acceptance, clearly marked to show the components selected for the proposed installation.

6.1.3 Any other documents required by the Building Official or the South Florida Building Code (SFBC) in order to properly evaluate the installation of this system.

Manuel Perez

Manuel Perez, P.E. Product Control Examiner
Product Control Division

Kawneer Company,Inc.

ACCEPTANCE No.: **01-0124.11**

APPROVED : MAR 2 2 2001

EXPIRES : **February 12, 2006**

NOTICE OF ACCEPTANCE: STANDARD CONDITIONS

1. Renewal of this Acceptance (approval) shall be considered after a renewal application has been filed and the original submitted documentation, including test supporting data, engineering documents, are no older than eight (8) years.

2. Any and all approved products shall be permanently labeled with the manufacturer's name, city, state, and the following statement: "Miami-Dade County Product Control Approved", or as specifically stated in the specific conditions of this Acceptance.

3. Renewals of Acceptance will not be considered if:
   a. There has been a change in the South Florida Building Code affecting the evaluation of this product and the product is not in compliance with the code changes.
   b. The product is no longer the same product (identical) as the one originally approved.
   c. If the Acceptance holder has not complied with all the requirements of this acceptance, including the correct installation of the product.
   d. The engineer who originally prepared, signed and sealed the required documentation initially submitted, is no longer practicing the engineering profession.

4. Any revision or change in the materials, use, and/or manufacture of the product or process shall automatically be cause for termination of this Acceptance, unless prior written approval has been requested (through the filing of a revision application with appropriate fee) and granted by this office.

5. Any of the following shall also be grounds for removal of this Acceptance:
   a. Unsatisfactory performance of this product or process.
   b. Misuse of this Acceptance as an endorsement of any product, for sales, advertising or any other purposes.

6. The Notice of Acceptance number preceded by the words Miami-Dade County, Florida, and followed by the expiration date may be displayed in advertising literature. If any portion of the Notice of Acceptance is displayed, then it shall be done in its entirety.

7. A copy of this Acceptance as well as approved drawings and other documents, where it applies, shall be provided to the user by the manufacturer or its distributors and shall be available for inspection at the job site at all time. The engineer needs not reseal the copies.

8. Failure to comply with any section of this Acceptance shall be cause for termination and removal of Acceptance.

9. This Notice of Acceptance consists of pages 1, 2 and this last page 3.

END OF THIS ACCEPTANCE

Manuel Perez

Manuel Perez, P.E., Product Control Examiner
Product Control Division

Kawneer Company,Inc.

ACCEPTANCE No.: **01-0124.11**

APPROVED : MAR 2 2 2001

EXPIRES : **February 12, 2006**

NOTICE OF ACCEPTANCE: EVIDENCE SUBMITTED

(For File ONLY. Not part of NOA.)

A. DRAWINGS

1. Manufacturer's die drawings and sections.
2. Drawing No **J702-DC** titled "TRIFAB 450-SCREW SPLINE" Sheets 1 through 5 of 5 dated 12/02/96, with revision 3 dated 3/2/01, prepared by manufacturer.
3.

B. TESTS

1. Test reports on 1) Air Infiltration Test, per PA 202-94
2) Uniform Static Air Pressure Test, Loading per PA 202-94
3) Water Resistance Test, per PA 202-94
4) Forced Entry Test, per SFBC 3603.2(b) and PA 202-94.

along with installation diagram of an aluminum out-swinging storefront system and storefront doors prepared by American Test Lab of South Florida, Test Report No. ATL 0808.01-96, dated 8/8 thru 9/20/96, signed and sealed by William R. Mehner, P.E.

C. CALCULATIONS:

1. Anchor Calculations and structural analysis, prepared by NEBS Inc., dated 10/16/97, signed and sealed by William R. Mehner, P.E.

D. MATERIAL CERTIFICATIONS

1. None

E. STATEMENTS

1. Statement letter of no financial interest, dated October 18, 1996, signed by William M. Myers, P.E. & Robert E. Fisher, P.E.

F. OTHER

1. This approval **renews** NOA No. **96-1206.04**, issued to Kawneer Company Inc. for TRIFAB 450 Flush Glazed Aluminum Storefront System which was approved February 12, 1998 with expiration date of February 12, 2001.

Manuel Perez, P.E. Product Control Examiner
Product Control Division

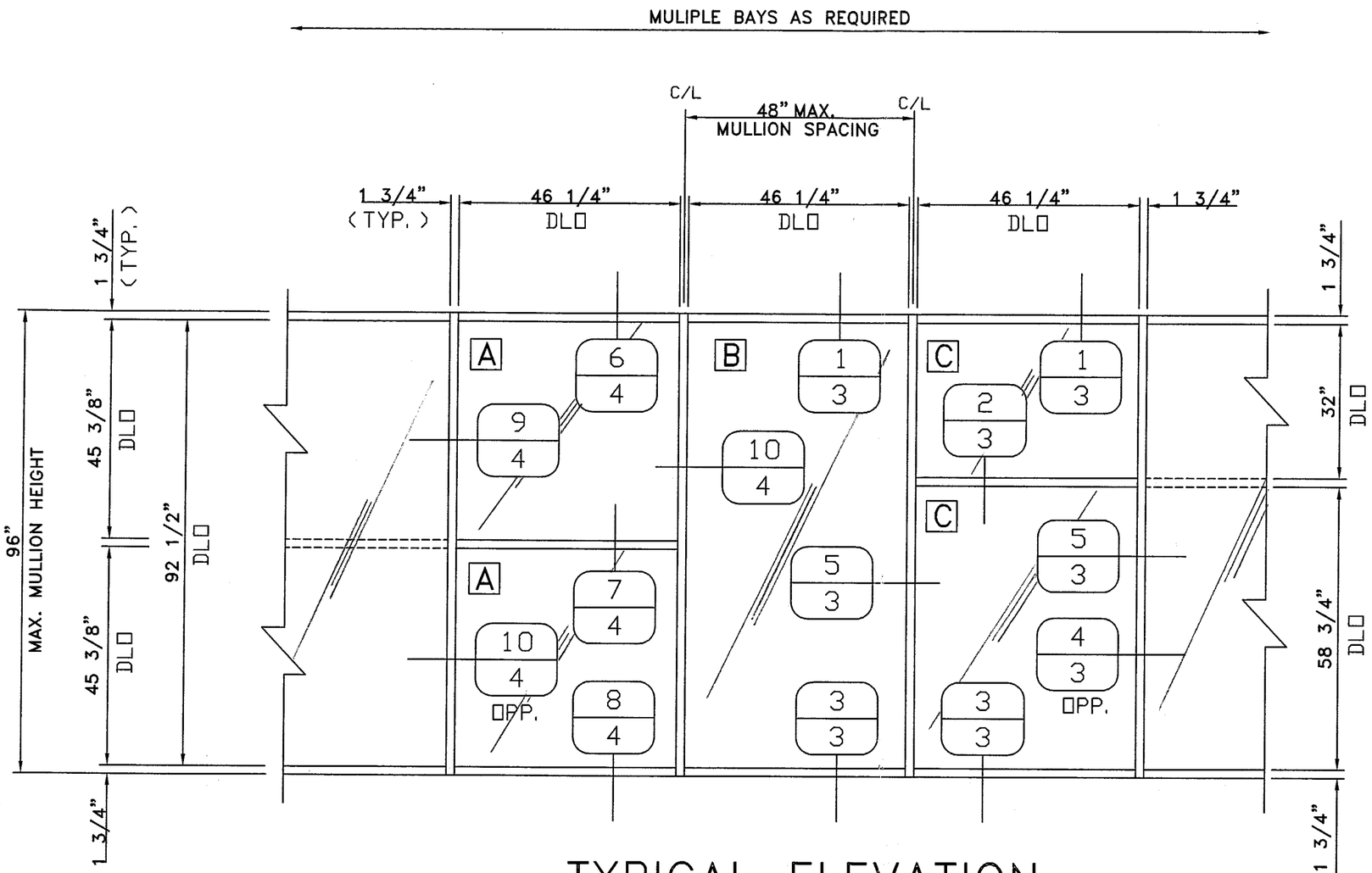

TYPICAL ELEVATION

GLAZING SCHEDULE	
GLAZING TYPE	MAXIMUM SIZE (LITE OPENING)
A = 3/16" HEAT STRENGTHENED GLASS	14.6 SQUARE FEET
B = 1/4" TEMPERED GLASS	29.7 SQUARE FEET
C = 1/4" HEAT STRENGTHENED GLASS	18.9 SQUARE FEET

DESIGN PRESSURE = +53/−60 PSF

SCALE: 1" = 1'-0"

NO.	DATE	DESCRIPTION OF REVISION	BY
3	3-2-01	REVISED PER DADE COUNTY	JME
2	1-9-98	REVISED PER DADE COUNTY & CALCULATIONS	JME
1	11-12-97	REVISED PER DADE COUNTY & CALCULATIONS	JME

APPROVED AS COMPLYING WITH THE SOUTH FLORIDA BUILDING CODE
DATE MAR 2 2 2001
BY Manuel Perez
PRODUCT CONTROL DIVISION
BUILDING CODE COMPLIANCE OFFICE
ACCEPTANCE NO. 01-0124.11

DADE CTY. PA # 01-0124.11

Kawneer
ARCHITECTURAL PRODUCTS
P. O. BOX 516
JONESBORO, GEORGIA 30236
PHONE (770) 478-8841
FAX (770) 603-4558

THIS DRAWING IS FOR DADE COUNTY PRODUCT APPROVAL ONLY

DESCRIPTION
DADE COUNTY CERTIFICATION
TYPICAL ELEVATION
PROTOCOL PA 202-94
TRIFAB 450 – SCREW SPLINE

DRAWN BY JME
DATE 12-2-96
DRWG. NO. J702-DC
SHEET 1 of 5
J702-DC1.DWG

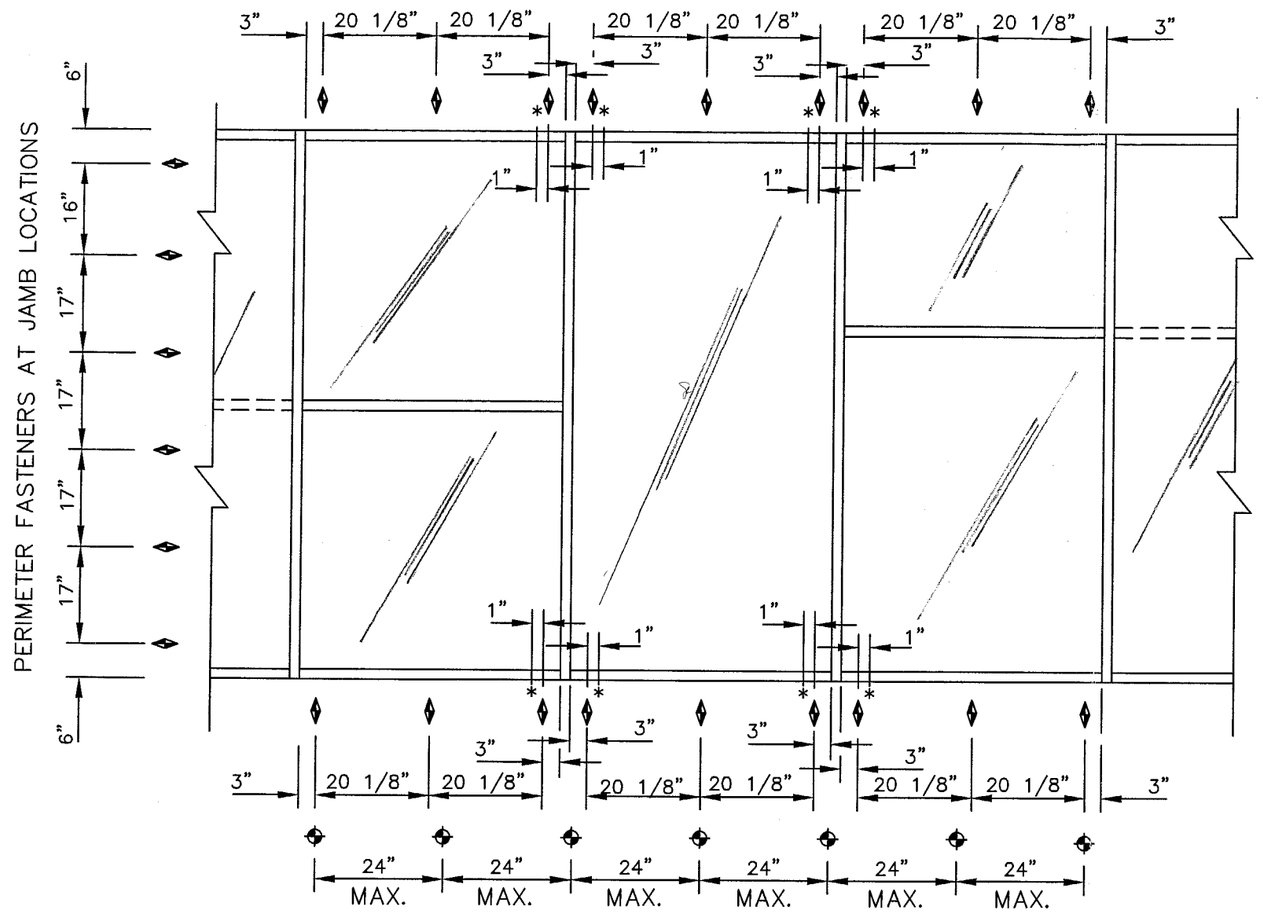

◆ = PERIMETER SCREWS

⊕ = FLASHING ATTACHMENT SCREWS

PERIMETER FASTENER LOCATIONS

FASTENER SCHEDULE

	NUMBER	MATERIAL	DESCRIPTION	SUBSTRATE	MIN. EMBEDMENT	MAX. SPACING
◆	–	AISI – 1022	1/4" TAPCON	CONCRETE (3000 PSI)	1–1/2"	SEE ELEVATION
◆	–	AISI – 1022	1/4" TAPCON	CMU (1500 PSI)	1–1/2"	SEE ELEVATION
* ◆	–	AISI – 1010	#14 WOOD SCREW * DENOTES ADDITIONAL FASTENERS REQUIRED FOR MULLION ANCHORAGE WITH WOOD SUBSTRATE.	WOOD (GR 2)	1–1/2"	SEE ELEVATION
◆	–	AISI – 1010 (15 KSI Fv)	1/4–20 TEK OR EQUAL	STEEL	VARIES	SEE ELEVATION
◆	–	304 STAINLESS STEEL (12.7 KSI Fv)	1/4–20 SELF TAPPING	STEEL	VARIES	SEE ELEVATION
⊕	028–598	STAINLESS STEEL	#10 X 1" TYPE 1 CROSS RECESSED PAN HEAD THREAD FORMING SCREW – TYPE AB	VARIES		SEE ELEVATION
	028–856	CARBON STEEL	#12 X 1 1/8" TYPE 1 CROSS RECESSED PAN HEAD THREAD FORMING SCREW – TYPE AB	SPLINE SCREW		

NO.	DATE	DESCRIPTION OF REVISION	BY
.	.	.	.
.	.	.	.
3	3-2-01	NO CHANGE	JME
2	1-9-98	REVISED PER DADE COUNTY & CALCULATIONS	JME
1	11-12-97	REVISED PER DADE COUNTY & CALCULATIONS	JME

APPROVED AS COMPLYING WITH THE SOUTH FLORIDA BUILDING CODE
DATE MAR 2 2 2001
BY Manuel Perez
PRODUCT CONTROL DIVISION
BUILDING CODE COMPLIANCE OFFICE
ACCEPTANCE NO. 01-0124.11

Kawneer
ARCHITECTURAL PRODUCTS
P.O. BOX 516
JONESBORO, GEORGIA 30236
PHONE (770) 478-8841
FAX (770) 603-4558

THIS DRAWING IS FOR DADE COUNTY PRODUCT APPROVAL ONLY

DESCRIPTION
DADE COUNTY CERTIFICATION
FASTENERS/HARDWARE
PROTOCOLS PA 202-94
TRIFAB 450 – SCREW SPLINE

DRAWN BY JME
DATE 12-2-96
DRWG. NO. J702-DC
SHEET 2 OF 5
J702-DC2.DWG

SCALE: 1' = 1'-0"

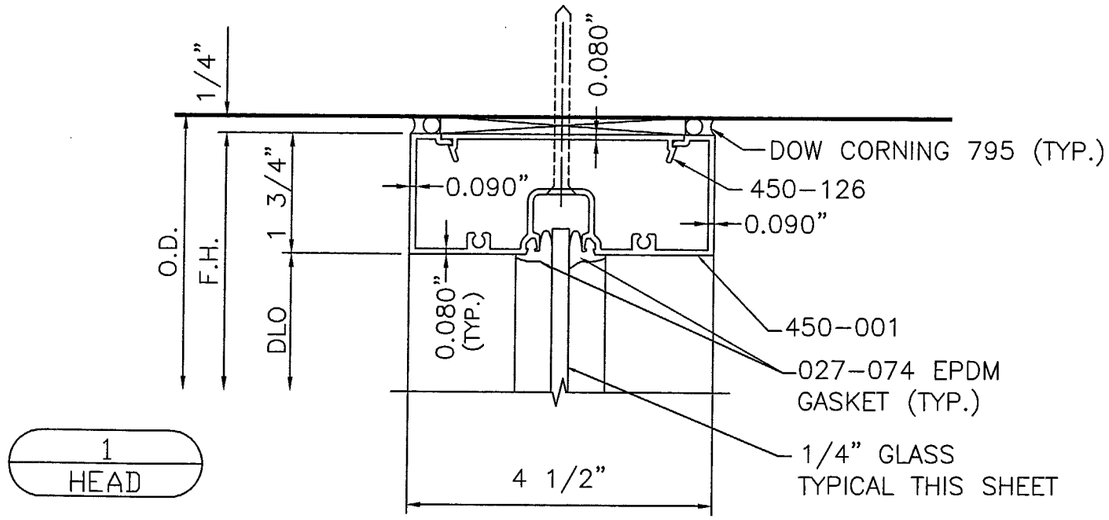

1
HEAD

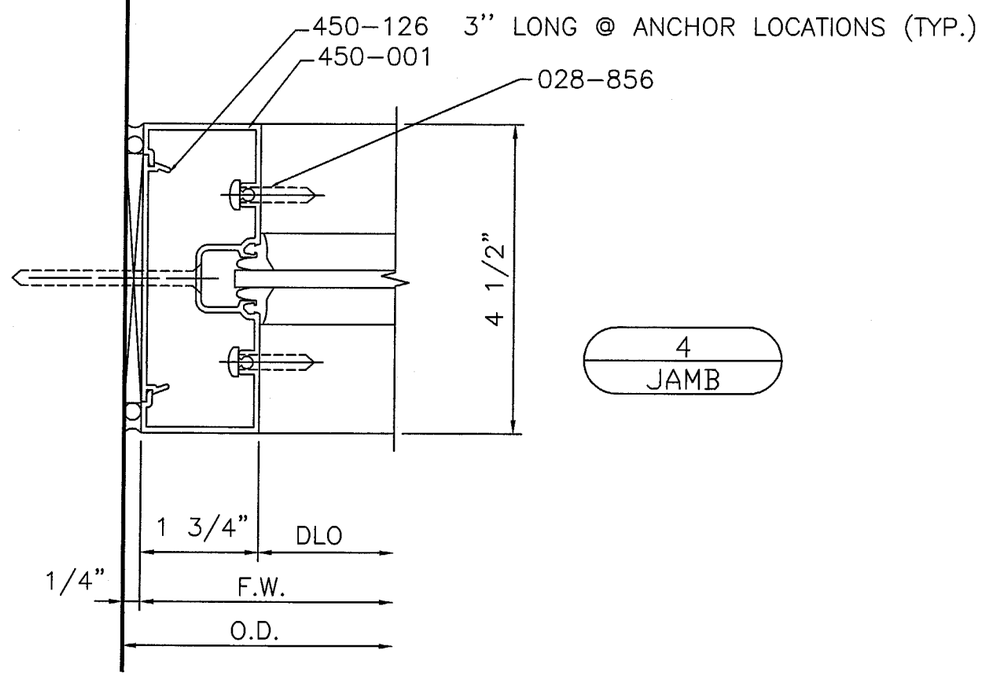

4
JAMB

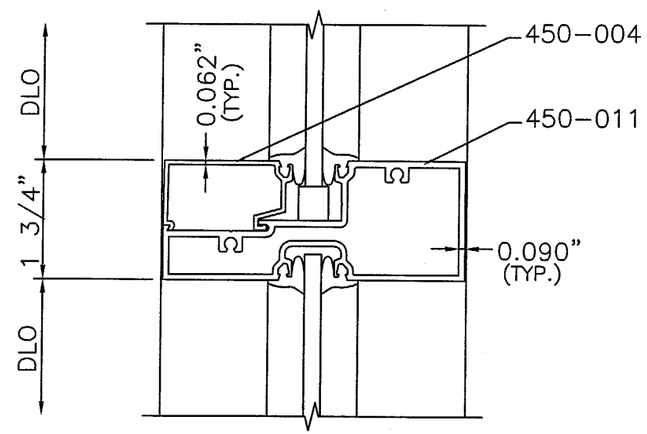

2
HORIZ. MULLION

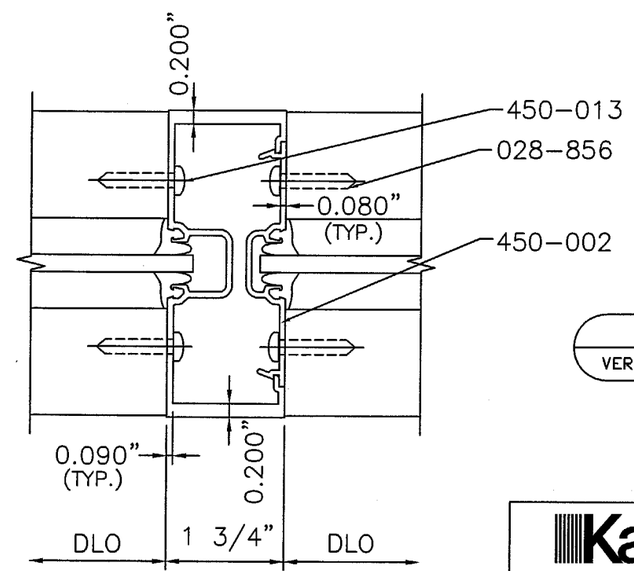

5
VERT. MULLION

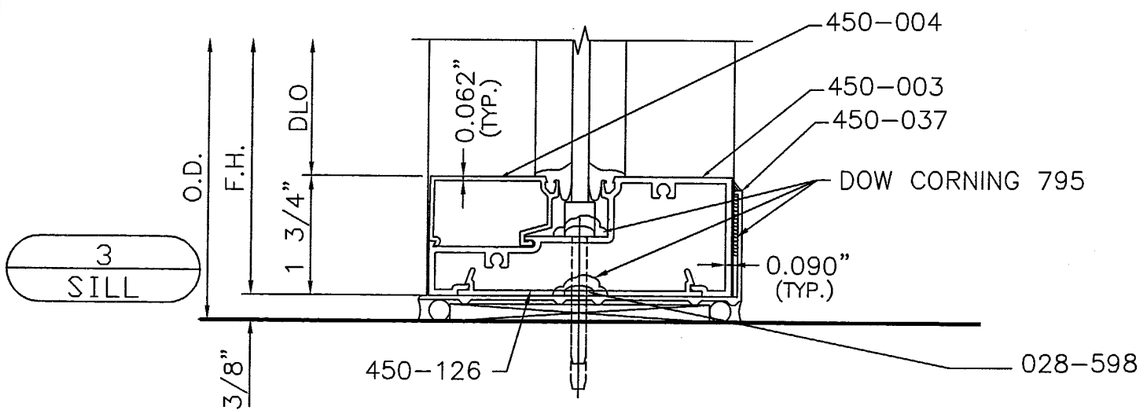

3
SILL

ALL FRAMING MATERIAL IS 6063-T5 ALUMINUM ALLOY

NO.	DATE	DESCRIPTION OF REVISION	BY
.	.	.	.
.	.	.	.
3	3-2-01	REVISED PER DADE COUNTY	JME
2	1-9-98	NO CHANGE	JME
1	11-12-97	REVISED PER DADE COUNTY & CALCULATIONS	JME

APPROVED AS COMPLYING WITH THE SOUTH FLORIDA BUILDING CODE
DATE MAR 2 2 2001
BY Manuel Diaz
PRODUCT CONTROL DIVISION
BUILDING CODE COMPLIANCE OFFICE
ACCEPTANCE NO. 01-0124.11

Kawneer
ARCHITECTURAL PRODUCTS
P.O. BOX 516
JONESBORO, GEORGIA 30236
PHONE (770) 478-8841
FAX (770) 603-4558

THIS DRAWING IS FOR DADE COUNTY PRODUCT APPROVAL ONLY

DESCRIPTION
DADE COUNTY CERTIFICATION
TYPICAL DETAILS
PROTOCOL PA 202-94
TRIFAB 450 – SCREW SPLINE

DRAWN BY: JME
DATE: 12-2-96
DRWG. NO.: J702-DC
SHEET: 3 of 5
J702-DC3.DWG

SCALE: FULL

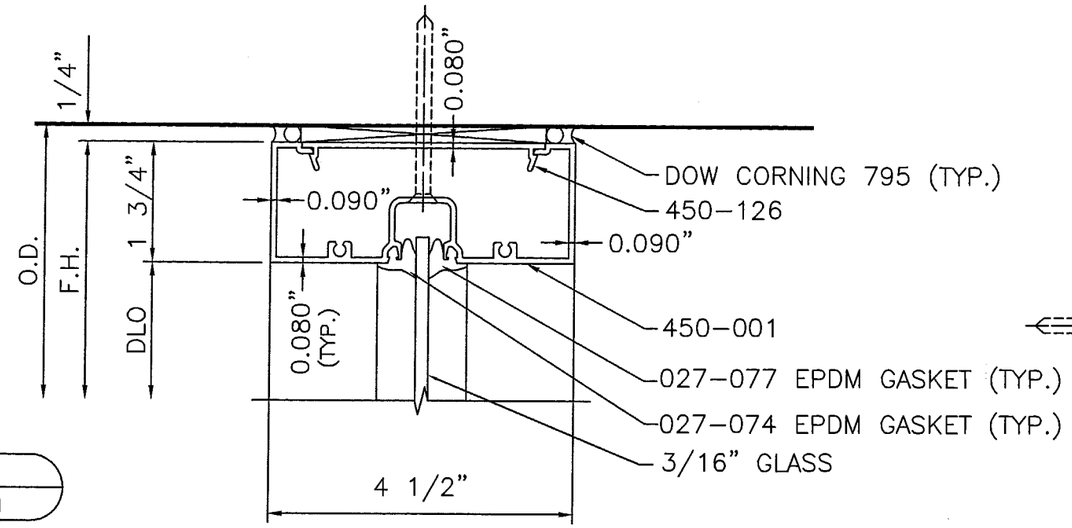

6
HEAD

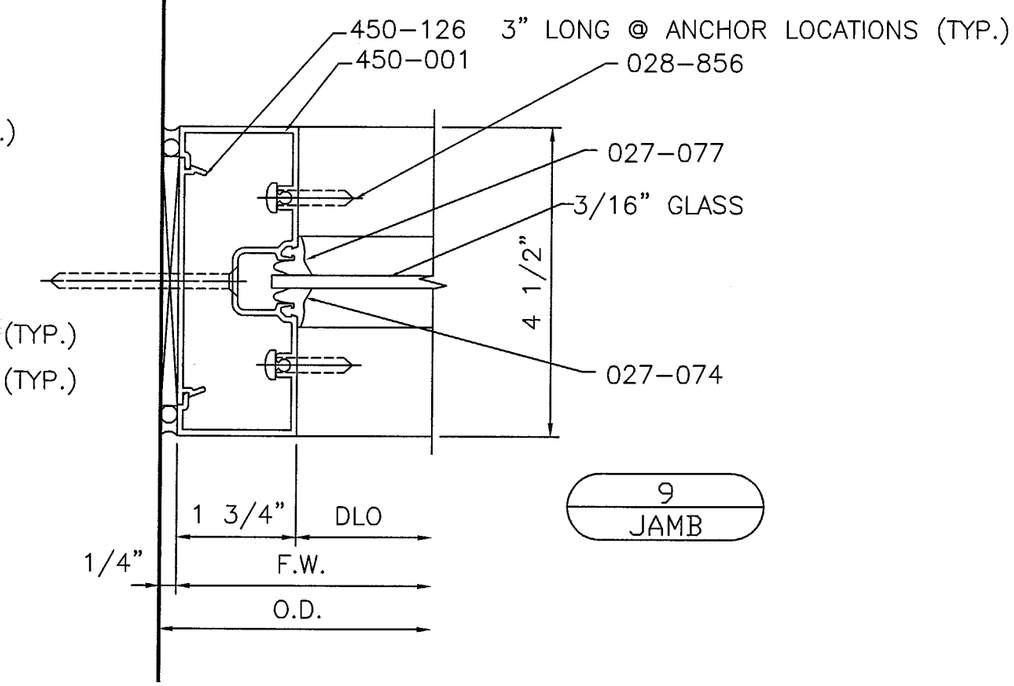

9
JAMB

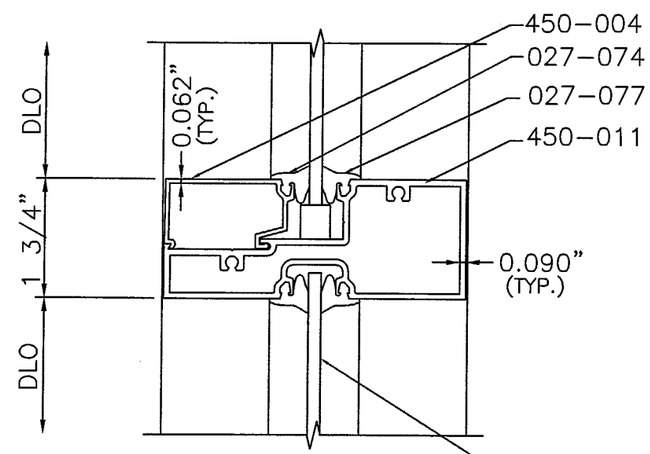

7
HORIZ. MULLION

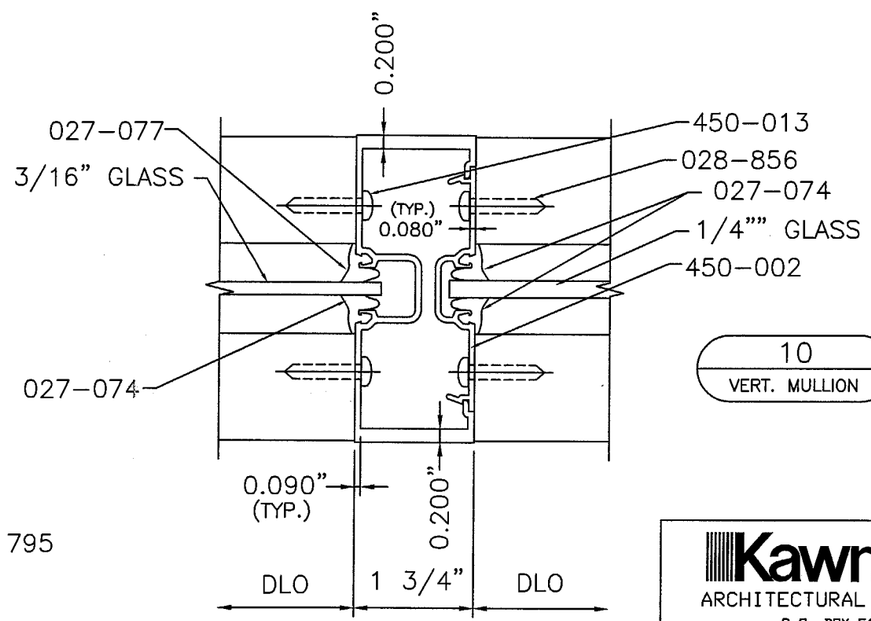

10
VERT. MULLION

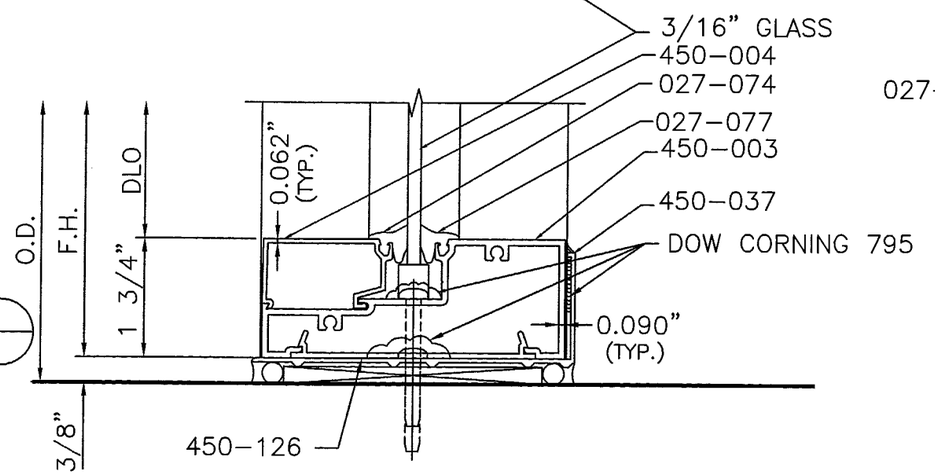

8
SILL

ALL FRAMING MATERIAL IS
6063-T5 ALUMINUM ALLOY

NO.	DATE	DESCRIPTION OF REVISION	BY
.	.	.	.
.	.	.	.
3	3-2-01	REVISED PER DADE COUNTY	JME
2	1-9-98	NO CHANGE	JME
1	11-12-97	REVISED PER DADE COUNTY & CALCULATIONS	JME

APPROVED AS COMPLYING WITH THE
SOUTH FLORIDA BUILDING CODE
DATE MAR 22 2001
BY Manuel Cruz
PRODUCT CONTROL DIVISION
BUILDING CODE COMPLIANCE OFFICE
ACCEPTANCE NO. 01-0124.11

Kawneer
ARCHITECTURAL PRODUCTS
P. O. BOX 516
JONESBORO, GEORGIA 30236
PHONE (770) 478-8841
FAX (770) 603-4558

THIS DRAWING IS FOR DADE COUNTY PRODUCT APPROVAL ONLY

DESCRIPTION
DADE COUNTY CERTIFICATION
TYPICAL DETAILS
PROTOCOL PA 202-94
TRIFAB 450 - SCREW SPLINE

DRAWN BY JME	DATE 12-2-96
DRWG. NO. J702-DC	
SHEET 4 of 5	J702-DC4.DWG

SCALE: FULL

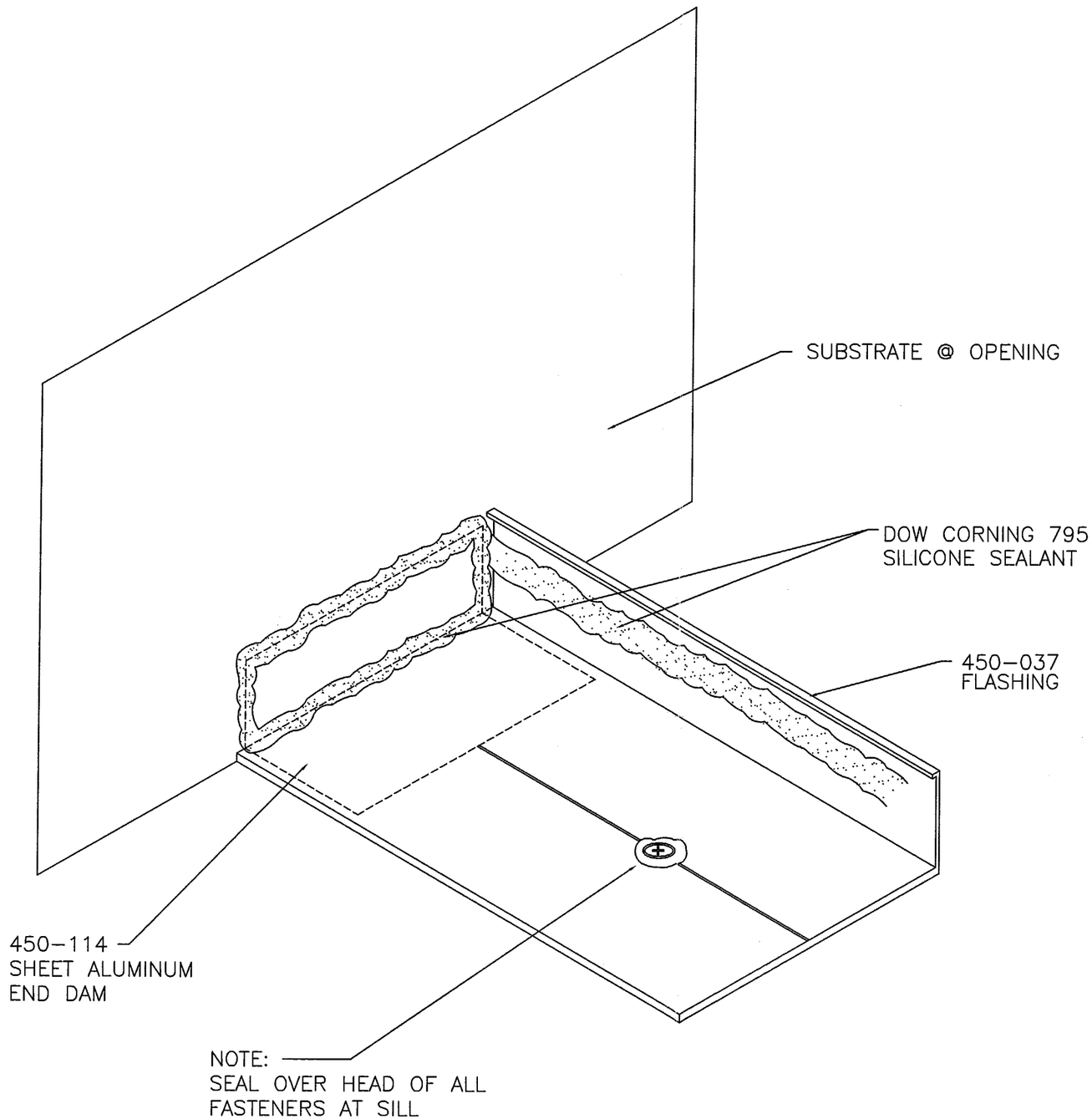

NO.	DATE	DESCRIPTION OF REVISION	BY
.	.	.	.
.	.	.	.
3	3-2-01	NO CHANGE	JME
2	1-9-98	NO CHANGE	JME
1	11-12-97	REVISED PER DADE COUNTY & CALCULATIONS	JME

APPROVED AS COMPLYING WITH THE
SOUTH FLORIDA BUILDING CODE
DATE MAR 2 2 2001
BY Manuel Serra
PRODUCT CONTROL DIVISION
BUILDING CODE COMPLIANCE OFFICE
ACCEPTANCE NO. 00-0124.11

Kawneer
ARCHITECTURAL PRODUCTS
P.O. BOX 516
JONESBORO, GEORGIA 30236
PHONE (770) 478-8841
FAX (770) 603-4558

THIS DRAWING IS FOR DADE COUNTY PRODUCT APPROVAL ONLY

DESCRIPTION
DADE COUNTY CERTIFICATION
TYPICAL DETAILS
PROTOCOL PA 202-94
TRIFAB 450 - SCREW SPLINE

DRAWN BY	DATE
JME	10-10-97

DRWG. NO. J702-DC

SHEET 5 of 5

J702-DC5.DWG

SCALE: FULL