MIAMI-DADE COUNTY, FLORIDA
METRO-DADE FLAGLER BUILDING

BUILDING CODE COMPLIANCE OFFICE
METRO-DADE FLAGLER BUILDING
140 WEST FLAGLER STREET, SUITE 1603
MIAMI, FLORIDA 33130-1563
(305) 375-2901 FAX (305) 375-2908

CONTRACTOR LICENSING SECTION
(305) 375-2527 FAX (305) 375-2558

CONTRACTOR ENFORCEMENT DIVISION
(305) 375-2966 FAX (305) 375-2908

PRODUCT CONTROL DIVISION
(305) 375-2902 FAX (305) 372-6339

PRODUCT CONTROL NOTICE OF ACCEPTANCE

Ultimate Door of Palm Beach, Inc.
2800 2nd Avenue North
Lake Worth ,FL 33461

Your application for Notice of Acceptance (NOA) of:
"Direct Set" Aluminum Clad Wood Fixed Window - Impact Resistant
under Chapter 8 of the Code of Miami-Dade County governing the use of Alternate Materials and Types of Construction, and completely described herein, has been recommended for acceptance by the Miami-Dade County Building Code Compliance Office (BCCO) under the conditions specified herein.

This NOA shall not be valid after the expiration date stated below. BCCO reserves the right to secure this product or material at any time from a jobsite or manufacturer's plant for quality control testing. If this product or material fails to perform in the approved manner, BCCO may revoke, modify, or suspend the use of such product or material immediately. BCCO reserves the right to revoke this approval, if it is determined by BCCO that this product or material fails to meet the requirements of the South Florida Building Code.

The expense of such testing will be incurred by the manufacturer.

ACCEPTANCE NO.: 01-0124.14
EXPIRES: 04/16/2006

Raul Rodriguez
Chief Product Control Division

THIS IS THE COVERSHEET, SEE ADDITIONAL PAGES FOR SPECIFIC AND GENERAL CONDITIONS
BUILDING CODE & PRODUCT REVIEW COMMITTEE

This application for Product Approval has been reviewed by the BCCO and approved by the Building Code and Product Review Committee to be used in Miami-Dade County, Florida under the conditions set forth above.

Francisco J. Quintana, R.A.
Director
Miami-Dade County
Building Code Compliance Office

APPROVED: 06/07/2001

Ultimate Door of Palm Beach, Inc.

ACCEPTANCE No.: **01-0124.14**

APPROVED : JUN 07 2001

EXPIRES : **April 16, 2006**

NOTICE OF ACCEPTANCE: SPECIFIC CONDITIONS

1. SCOPE

1.1 This **renews** the Notice of Acceptance, No. 97-0912.020, which was issued on April 16, 1998. It approves an aluminum clad fixed wood window as described in section 2 of this Notice of Acceptance, designed to comply with the South Florida Building Code, (SFBC), 1994 Edition for Miami-Dade County, for the locations where the pressure requirements, as determined by SFBC Chapter 23, do not exceed the Design Pressure Rating values indicated in the approved drawings.

2. PRODUCT DESCRIPTION

The **"Direct Set" Aluminum Clad Wood Fixed Window – Impact Resistant** and its components shall be constructed in strict compliance with the following document: Drawing No. **529B,** Sheet 1 thru 4 of 4, titled "Sidelites/Transoms", dated 10/02/97, signed and sealed by Warren Schaefer, P.E., bearing the Miami-Dade County Product Control approval stamp with the Notice of Acceptance number and approval date by the Miami-Dade County Product Control Division. These documents shall hereinafter be referred to as the approved drawings.

3. LIMITATIONS

3.1 This approval applies to single unit applications of aluminum clad fixed wood windows, as shown approved drawings.

3.2 Units with dimensions equal to or smaller than those shown in approved drawings shall qualify under this approval.

3.3 Installation is limited by the Design Pressure Rating shown in approved drawings.

4. INSTALLATION:

4.1 The an aluminum clad fixed wood window and its components shall be constructed in strict compliance with the approved drawings.

4.2 Hurricane protection system (shutters): the installation of this unit **will not require** a hurricane protection system.

5. LABELING

5.1 Each unit shall bear a permanent label with the manufacturer's name or logo, city, state and following statement: "Miami-Dade County Product Control Approved".

6. BUILDING PERMIT REQUIREMENTS

6.1 Application for building permit shall be accompanied by two copies of the following:

- **6.1.1** This Notice of Acceptance.
- **6.1.2** Duplicate copies of the approved drawings, as identified in section 2 of this Notice of Acceptance, clearly marked to show the components selected for the proposed installation.
- **6.1.3** Any other documents required by the Building Official or the South Florida Building Code (SFBC) in order to properly evaluate the installation of this system.

Manuel Perez

Manuel Perez, P.E., Product Control Examiner
Product Control Division

Ultimate Door of Palm Beach, Inc.

ACCEPTANCE No.: 01-0124.14

APPROVED : JUN 07 2001

EXPIRES : April 16, 2006

NOTICE OF ACCEPTANCE: STANDARD CONDITIONS

1. Renewal of this Acceptance (approval) shall be considered after a renewal application has been filed and the original submitted documentation, including test supporting data, engineering documents, are no older than eight (8) years.

2. Any and all approved products shall be permanently labeled with the manufacturer's name, city, state, and the following statement: "Miami-Dade County Product Control Approved", or as specifically stated in the specific conditions of this Acceptance.

3. Renewals of Acceptance will not be considered if:
   a) There has been a change in the South Florida Building Code affecting the evaluation of this product and the product is not in compliance with the code changes;
   b) The product is no longer the same product (identical) as the one originally approved.
   c) If the Acceptance holder has not complied with all the requirements of this acceptance, including the correct installation of the product;
   d) The engineer who originally prepared, signed and sealed the required documentation initially submitted , is no longer practicing the engineering profession.

4. Any revision or change in the materials, use, and/or manufacture of the product or process shall automatically be cause for termination of this Acceptance, unless prior written approval has been requested (through the filing of a revision application with appropriate fee) and granted by this office.

5. Any of the following shall also be grounds for removal of this Acceptance:
   a) Unsatisfactory performance of this product or process;
   b) Misuse of this Acceptance as an endorsement of any product, for sales, advertising or any other purpose.

6. The Notice of Acceptance number preceded by the words Dade County, Florida, and followed by the expiration date may be displayed in advertising literature. If any portion of the Notice of Acceptance is displayed, then it shall be done in its entirety.

7. A copy of this Acceptance as well as approved drawings and other documents, where it applies, shall be provided to the user by the manufacturer or its distributors and shall be available for inspection at the job site at all times. The engineer does not need to reseal the copies.

8. Failure to comply with any section of this Acceptance shall be cause for termination and removal of Acceptance.

9. This Notice of Acceptance consists of pages 1, 2 and this last page 3.

END OF THIS ACCEPTANCE

Manuel Perez

Manuel Perez, P. E., Product Control Examiner
Product Control Division

Ultimate Door of Palm Beach, Inc.

ACCEPTANCE No.: **01-0124.14**

APPROVED : JUN 07 2001

EXPIRES : **April 16, 2006**

NOTICE OF ACCEPTANCE: STANDARD CONDITIONS

A. DRAWINGS

1. Manufacturer's die drawings and sections.
2. Drawing No. **529B**, Sheet 1thru 4 of 4, titled "Sidelites/Transoms", prepared by manufacturer, dated 10/02/97, signed and sealed by Warren W. Schaefer, P.E.

B. TESTS

1. Test reports on 1) Large Missile Impact Test, per SFBC, PA 201-94.
   2) Cyclic Wind Pressure Loading, per SFBC, PA 203-94.
   along with the manufacturer's parts and section drawings for 4'(w) x 8'(h) alum. Clad wood fixed window, prepared by Hurricane Test Laboratory, Inc. Test report No. **HTL-0026-0806-96**, dated 08/07/96, signed and sealed by Timothy Marshall, P.E.
2. Test reports on 1) Large Missile Impact Test, per SFBC, PA 201-94.
   2) Cyclic Wind Pressure Loading, per SFBC, PA 203-94.
   along with the manufacturer's parts and section drawings for 5'(w) x 10'(h) alum. Clad wood fixed window (Transom), prepared by Hurricane Test Laboratory, Inc. Test report No. **HTL-0026-0612-97**, dated 06/18/97, signed and sealed by Timothy Marshall, P.E.
3. Test reports on 1) Uniform Load Static Air Pressure Test, per SFBC, PA 202-94.
   along with the manufacturer's parts and section drawings for 7'(w) x 3'-6"(h)Radius alum. Clad wood fixed window (Transom), prepared by Hurricane Test Laboratory, Inc. Test report No. **HTL-0026-0612-97**, dated 06/20/97, signed and sealed by Timothy Marshall, P.E.
4. Test reports on 1) Uniform Load Static Air Pressure Test, per SFBC, PA 202-94.
   along with the manufacturer's parts and section drawings for 7'(w) x 3'-6"(h) alum. Clad wood fixed window, prepared by Hurricane Test Laboratory, Inc. Test report No. **HTL-0026-0103-97**, dated 01/08/97, signed and sealed by Timothy Marshall, P.E.
5. Test reports on 1) Air Infiltration Test, per SFBC, PA 202-94.
   2) Uniform Static Air Pressure Test, Loading per PA 202-94.
   3) Water Resistance Test, per SFBC, PA 202-94.
   4) Large Missile Impact Test, per SFBC, PA 201-94.
   5) Cyclic Wind Pressure Loading, per SFBC, PA 203-94.
   along with the manufacturer's parts and section drawings for 4'(w) x 12'(h) alum. Clad wood fixed window, prepared by Hurricane Test Laboratory, Inc. Test report No. **HTL-0026-0405-97**, dated 01/08/97, signed and sealed by Timothy Marshall, P.E.

Manuel Perez

Manuel Perez, P.E., Product Control Examiner
Product Control Division

NOTICE OF ACCEPTANCE: EVIDENCE SUBMITTED
(For File ONLY. Not part of NOA.)

6. Test reports on 1) Air Infiltration Test, per SFBC, PA 202-94.
   2) Uniform Static Air Pressure Test Loading, per SFBC, PA 202-94.
   3) Water Resistance Test, per SFBC, PA 202-94.
   4) Large Missile Impact Test, per SFBC, PA 201-94.
   5) Cyclic Wind Pressure Loading, per SFBC, PA 203-94.

   along with the manufacturer's parts and section drawings for 4'(w) x 8'(h) alum. Clad wood fixed window, prepared by Hurricane Test Laboratory, Inc. Test report No. **HTL-0026-0414-97**, dated 04/15/97, signed and sealed by Timothy Marshall, P.E.

C. CALCULATIONS

1. Anchor Calculations and structural analysis prepared by W.W. Schaefer Engineering and Consulting P.A., dated 08/12/97, signed and sealed by Warren W. Schaefer, P.E.

D. MATERIAL CERTIFICATION

1. None

E. STATEMENTS

1. None

F. OTHERS

1. Notice of Acceptance No.97-0912.02 issued to Ultimate Door of Palm Beach, Inc for "Direct Set" Aluminum Clad Wood Fixed Window – Impact Resistant, dated 04/16/98, expiring on 04/16/01.

Manuel Perez, P.E., Product Control Examiner
Product Control Division

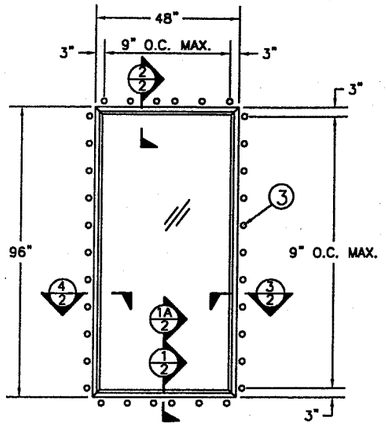

SIDELITE

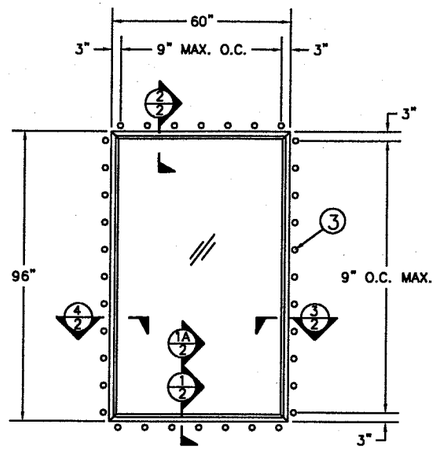

SIDELITE

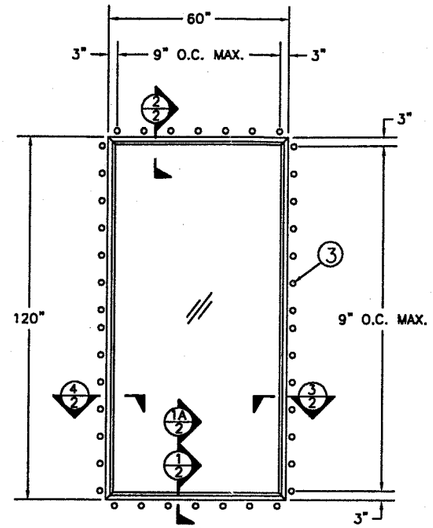

SIDELITE

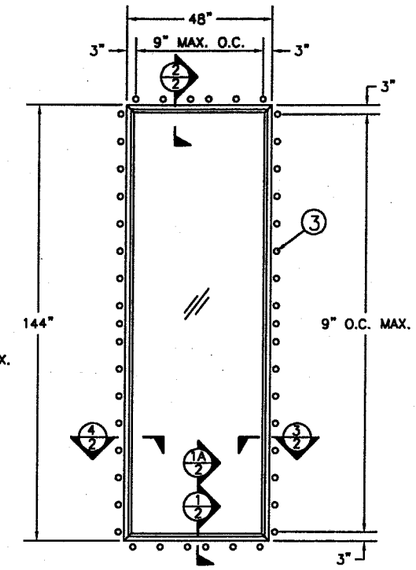

SIDELITE

OUTSIDE ELEVATIONS

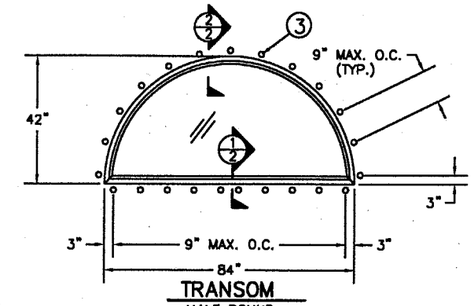

TRANSOM
HALF ROUND

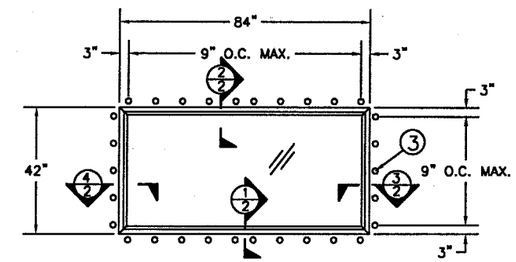

TRANSOM
RECTANGULAR

ALLOWABLE POSITIVE & NEGATIVE DESIGN LOAD TABLE (FOR WINDOWS WITH 3/8" LAMINATED ANNEALED GLASS)								
LONG DIMENSION	ALLOWABLE PRESSURE (PSF)							
48"	65	65	65	65	–	–	–	–
54"	65	65	65	65	63.8	–	–	–
60"	65	65	65	65	58.2	50.8	–	–
66"	65	65	65	60	53.2	46.3	43	–
72"	65	65	64	55.1	47.3	43.6	38	36
78"	65	65	60.6	50.8	43.7	39.5	36	34
84"	65	65	58.1	46.7	39.9	36.6	34.0	–
90"	65	65	55.5	43.2	37.2	33.9	–	–
96"	65	65	52.8	41.1	35	31.4	–	–
102"	65	65	50.4	39.4	32.9	–	–	–
108"	65	64.3	49.5	38.6	–	–	–	–
120"	65	62.2	44.9	35.8	–	–	–	–
132"	65	60.6	43	–	–	–	–	–
144"	65	59.6	–	–	–	–	–	–
SHORT DIMENSION	30"	36"	42"	48"	54"	60"	66"	72"

1) ALL WINDOW SIZES SMALLER THAN THOSE IN THIS TABLE HAVE A +/-65 PSF DESIGN LOAD.
2) WINDOW SIZES WITH "–" ARE NOT APPLICABLE SIZES TO BE USED.

ALLOWABLE POSITIVE & NEGATIVE DESIGN LOAD TABLE (FOR WINDOWS WITH 1/2" LAMINATED TEMPERED GLASS)					
LONG DIMENSION	ALLOWABLE PRESSURE (PSF)				
72"	65	65	65	59.1	54.2
78"	65	65	65	59.1	54.2
84"	65	65	65	59.1	54.2
90"	65	65	65	59.1	54.2
96"	65	65	65	59.1	54.2
102"	65	65	65	59.1	54.2
108"	65	65	65	59.1	54.2
120"	65	65	65	59.1	54.2
132"	65	65	–	–	–
144"	65	–	–	–	–
SHORT DIMENSION	48"	54"	60"	66"	72"

1) ALL WINDOW SIZES SMALLER THAN THOSE IN THIS TABLE HAVE A +/-65 PSF DESIGN LOAD.
2) WINDOW SIZES WITH "–" ARE NOT APPLICABLE SIZES TO BE USED.

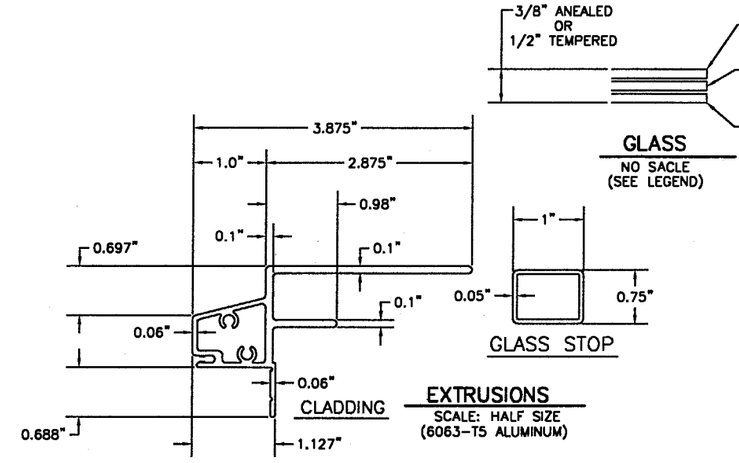

APPROVED AS COMPLYING WITH THE
SOUTH FLORIDA BUILDING CODE
DATE JUN 07 2001
BY
PRODUCT CONTROL DIVISION
BUILDING CODE COMPLIANCE OFFICE
ACCEPTANCE NO.

W. W. SCHAEFER ENGINEERING
& CONSULTING, P.A.
600 SANDTREE DRIVE; SUITE 203B
PALM BEACH GARDENS, FL 33403
PHONE: 561-775-4902; FAX: 561-775-4903

APR 25 2001

WARREN W. SCHAEFER, P.E.
STRUCTURAL ENGINEER; P.E. NO. 44135

ULTIMATE-DOOR
OF PALM BEACH, INC.
2800 2ND AVENUE NORTH
LAKE WORTH, FL 33461
PHONE: 561-642-2828; FAX: 561-642-9882

(DADE)

SCALE: 1/4"=1'-0"

DRAWN BY: W.W.S.

TITLE SIDELITES/TRANSOMS

DATE: 10/02/97

REV. NO.	DESCRIPTION	DATE

529B
DRAWING NO.

SHEET 1 OF 4

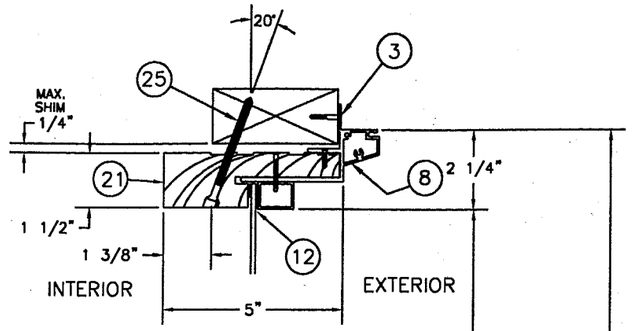

SECTION 2/2

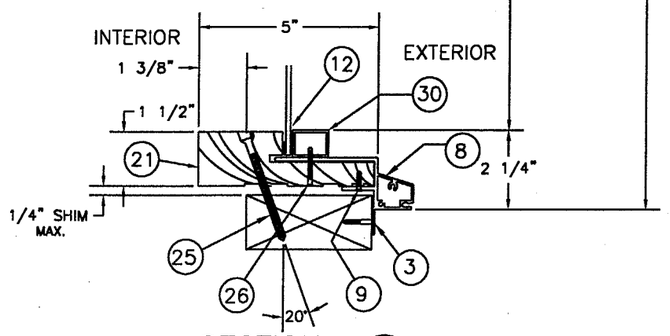

SECTION 1/2

DAYLIGHT OPENING FRAME SIZE

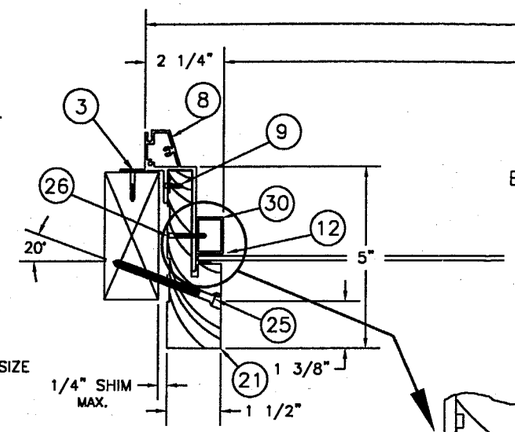

SECTION 3/2

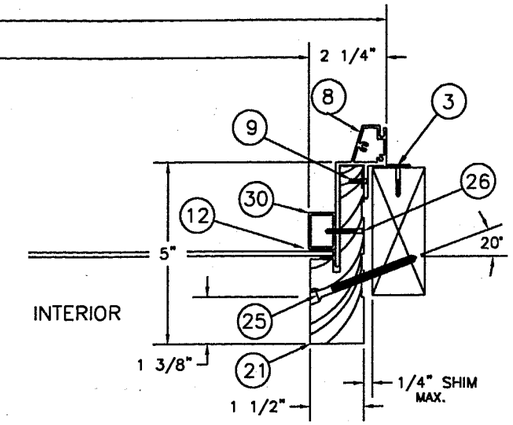

SECTION 4/2

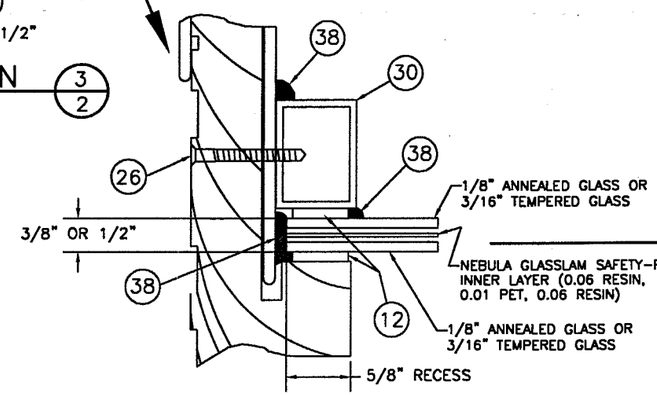

18 NEBULA SAFETY-PLUS LAMINATED GLASS

NO SCALE

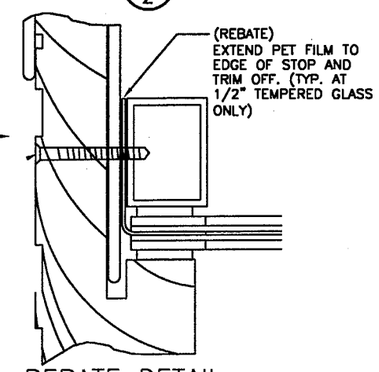

REBATE DETAIL

(TO BE USED AT ALL TEMPERED GLASS)

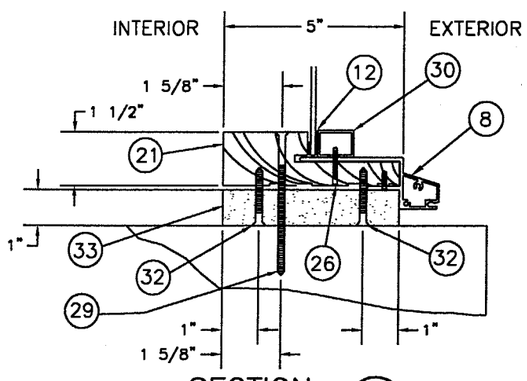

SECTION 1A/2

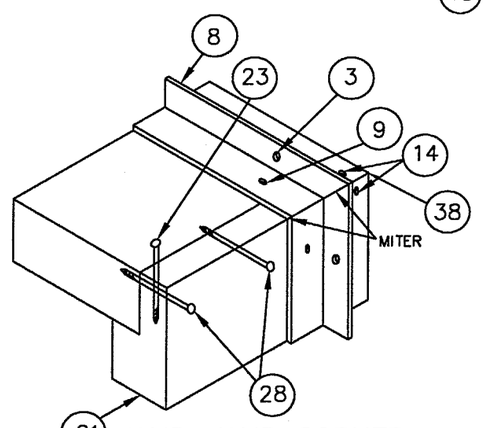

JAMB-JAMB CORNER

CORNER IS GLUED

APPROVED AS COMPLYING WITH THE SOUTH FLORIDA BUILDING CODE
DATE JUN 07 2001
BY Manuel Cerra
PRODUCT CONTROL DIVISION
BUILDING CODE COMPLIANCE OFFICE
ACCEPTANCE NO.

W. W. SCHAEFER ENGINEERING & CONSULTING, P.A.
600 SANDTREE DRIVE; SUITE 203B
PALM BEACH GARDENS, FL 33403
PHONE: 561-775-4902; FAX: 561-775-4903

APR 25 2001

WARREN W. SCHAEFER, P.E.
STRUCTURAL ENGINEER; P.E. NO. 44135

ULTIMATE-DOOR OF PALM BEACH, INC.
2800 2ND AVENUE NORTH
LAKE WORTH, FL 33461
PHONE: 561-642-2828; FAX: 561-642-9882

(DADE)

SCALE: 3"=1'-0"

DRAWN BY: W.W.S.

TITLE SIDELITES/TRANSOMS

DATE: 10/02/97

REV. NO.	DESCRIPTION	DATE

529B
DRAWING NO.

SHEET 2 OF 4

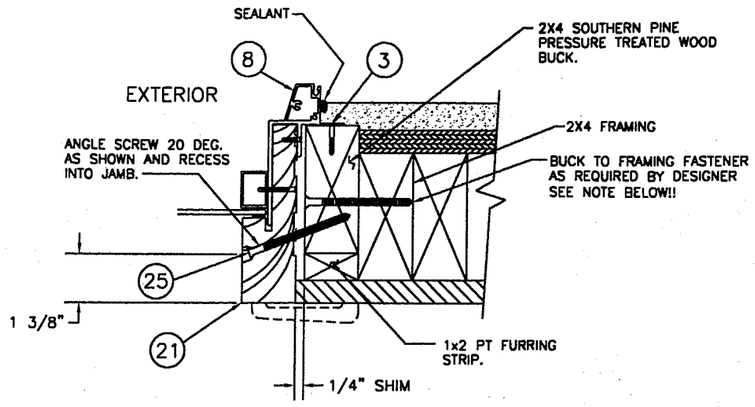

BUCKING DETAIL
2X4 FRAMED OPENING

NOTE: POINT LOADS EXIST AT MULLION ENDS AND AT DOOR LATCH POINTS AND VARY WITH THE SIZE OF THE SYSTEM. THE BUCK FASTENING DESIGNER SHALL CONSIDER THESE LOADS WHEN SPECIFYING BUCK TO OPENING FASTENERS AND THEIR SPACINGS (FASTENER SPACING SHALL NOT EXCEED 16" O.C. REGARDLESS OF SITUATION).

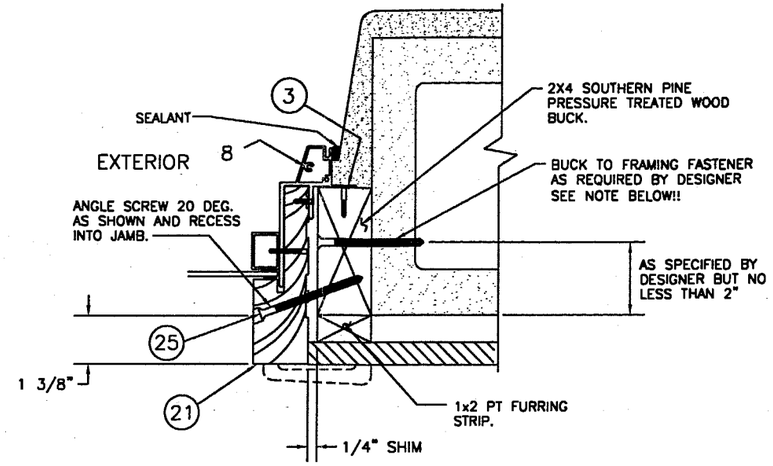

BUCKING DETAIL
BLOCK OR CONCRETE FRAMED OPENING

NOTE: POINT LOADS EXIST AT MULLION ENDS AND AT DOOR LATCH POINTS AND VARY WITH THE SIZE OF THE SYSTEM. THE BUCK FASTENING DESIGNER SHALL CONSIDER THESE LOADS WHEN SPECIFYING BUCK TO OPENING FASTENERS AND THEIR SPACINGS (FASTENER SPACING SHALL NOT EXCEED 16" O.C. REGARDLESS OF SITUATION).

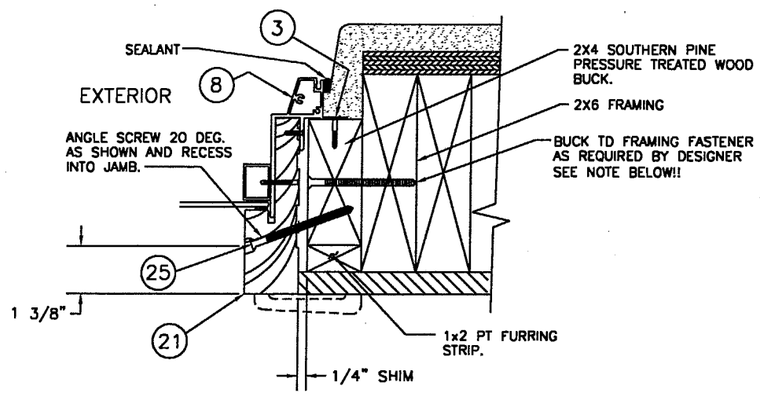

BUCKING DETAIL
2X6 FRAMED OPENING

NOTE: POINT LOADS EXIST AT MULLION ENDS AND AT DOOR LATCH POINTS AND VARY WITH THE SIZE OF THE SYSTEM. THE BUCK FASTENING DESIGNER SHALL CONSIDER THESE LOADS WHEN SPECIFYING BUCK TO OPENING FASTENERS AND THEIR SPACINGS (FASTENER SPACING SHALL NOT EXCEED 16" O.C. REGARDLESS OF SITUATION).

GENERAL NOTES

1. THESE GLASS DOOR AND DIRECT SET SYSTEMS HAVE BEEN DESIGNED IN ACCORDANCE WITH:
   A) SOUTH FLORIDA BUILDING CODE, 1994 EDITION
2. MINIMUM MECHANICAL PROPERTIES SHALL BE IN ACCORDANCE WITH THE ALUMINUM ASSOCIATION HANDBOOK AND NATIONAL WOOD WINDOW AND DOOR MANUFACTURERS ASSOCIATION.
3. DESIGN POSITIVE AND NEGATIVE WIND LOADS FOR OPENINGS MAY NOT EXCEED THOSE LISTED ON THESE DRAWINGS FOR EACH PARTICULAR SYSTEM.
4. CONCRETE SHALL HAVE A MINIMUM COMPRESSIVE STRENGTH OF 2500 PSI AT 28 DAYS.
5. THE DETAILS AND SPECIFICATIONS SHOWN HEREIN REPRESENT THE PRODUCTS PROPOSED FOR IMPACT, CYCLIC AND UNIFORM STATIC AIR PRESSURE TESTING IN CONFORMANCE WITH DADE COUNTY PROTOCOLS PA 201, 202 AND 203 WITH DESIGN LOADS AS SHOWN IN THE LEGEND AND/OR IN GRAPHS.
6. ALL FASTENERS FOR BUCK TO OPENING CONNECTIONS SHALL BE AS SPECIFIED BY THE DESIGNER OF RECORD BUT MUST CONFORM WITH THE MINIMUM REQUIREMENTS OF THESE DRAWINGS.
6. REFER TO MATERIAL LIST "MTL-1" FOR ALL MATERIAL DESCRIPTIONS.

APPROVED AS COMPLYING WITH THE SOUTH FLORIDA BUILDING CODE
DATE JUN 07 2001
BY Manuel Sanz
PRODUCT CONTROL DIVISION
BUILDING CODE COMPLIANCE OFFICE
ACCEPTANCE NO.

W. W. SCHAEFER ENGINEERING & CONSULTING, P.A.
600 SANDTREE DRIVE; SUITE 203B
PALM BEACH GARDENS, FL 33403
PHONE: 561-775-4902; FAX: 561-775-4903

APR 25 2001

WARREN W. SCHAEFER, P.E.
STRUCTURAL ENGINEER; P.E. NO. 44135

ULTIMATE-DOOR OF PALM BEACH, INC.
2800 2ND AVENUE NORTH
LAKE WORTH, FL 33461
PHONE: 561-642-2828; FAX: 561-642-9882

(DADE)

SCALE: 3"=1'-0"		DRAWN BY: W.W.S.
TITLE SIDELITES/TRANSOMS		DATE: 10/02/97
REV. NO. / DESCRIPTION / DATE		529B DRAWING NO.
		SHEET 3 OF 4

Material List MTL-1

1. 4" x 4 1/2" Hager nickel cad plated brass hinge with stainless steel ball bearings, pin and cap (part no. RCBB 1191)
2. #10 x 1/1/2" stainless steel screws(hinge to panel).
3. #8 x 1 1/4" s/stl SMS or wood screw (screw nail fin to bucking)@ 3" from corners and 9" o.c.
4. #6 x 1 1/2" trim screw ot glass stop (2" fram ends- spaced 9 1/2" apart).
5. 458-B26D-12" Hager flush bolt w/custam 3/8" stainless steel thru bolt.
6. SCHLEGEL multi point lock, manufactured by Fulex Co. (3-point).
7. 4 1/2" aluminum stiles & 7 1/2" bottom rail .090 extrusion, 6063 alloy, T5 Tempered.
8. Clad Frame aluminum .10 extrusion,6063 alloy, T5 Tempered.
9. #8 x 5/8" hex tek screws secures clad frame to wood (spaced 12" apart).
10. #8 x 2 1/2" SMS or wood screw (frame to panel attachment for fixed panel placed within 4" of corners and spaced 9" apart)
11. Sub-threshold (seals end grain of frame).
12. Pak-Lite Glazing Tape 1/16" x 9/16" (2) sided adhesive (closed cell urethane).
13. SCHLEGEL Q-Lon 605 door seals #A-6F16A.
14. #6 x2" zinc plated Phllips flat head screws (fastens clad jamb corners).
15. #48-28-3770-1 KoroSeal sweeps.
16. Hardwood 3/4" x 2" x 5" tenons.
17. #12 x 1" stainless steel screws (hinge to frame).
18. Nebula Glasslam Safety-Plus Laminated Glass (overall thickness 3/8" AN or 1/2" T)
    Clear 1/8" annealed or 3/16" tempered
    Adhesive innerliner /1/16"
    PET /.010
    Adhesive innerliner /1/16"
    Clear 1/8" annealed or 3/16" tempered
19. 4 9/16" aluminum bumper threshold with continuous polymeric bulb gasket.
20. Stile and rail material, stage block core with 1/8" face veneers (clear pine).
21. Finger jointed pine, rabbeted jambs.
22. Concrete screw CR-10 (1/4" x 3 1/4") Code No. TF3132C @ 6" from corner and not to exceed 24" o.c. (option to use 1/4" x 3 1/4" tapcons).
23. #10 x 3 1/2" part #C312D coarse thread (fastens wood head to wood jamb).
24. 3/8" x 6" galvanized lag bolt with 1/4" washer.
    A - through head into panel.
    B - through threshold into panel.
25. #8 x 3" square slot finish screw @ 3" fram each end not to exceed 12" c/c around. Angle 20 deg. when attaching to 2x4 buck.
26. #10 x 1 1/4" TEK, 9" o.c.
27. #12 x 2 1/2" Stainless steel screw used for the following:
    a) One per door hinge screwed through jamb and into buck.
    b) One placed on each side of the door's top flush bolts (2" off mating line of doors) through the head jamb and into the buck.
    c) One placed on each side af mullion end 2" off mullion centerline.
28. #8 x 2 1/2" Galvanized deck screw, phillips head, coarse thread(fastens wood to jamb to wood head and 2" x 6" wood mull to wood jamb or wood head). Place within 6" of ends and space at 12" a.c.
29. 1/4" x 4" long Tapcon (non corrosive) placed 3" from each corner and 12" o.c.
30. 3/4" x 1" Glass stop tubular aluminum .050 extrusion 6063 alloy T-5 Tempered.
31. 3/4" x 1 1/8"+/- wood glass stop.
32. #8 x 1 5/8" galv. deck screw (fastens wood mull to wood jamb or wood head & sub-threshold to sill jamb). Place within 6" of ends and space at 12" o.c.
33. 4 9/16" - 5" x 1" sub-threshold fastened to sill.
34. 4 9/16" x 1 1/4" pine mull.
35. Aluminum mull clip.
36. #7 X 2 1/4"Square drive trim screw @ 11" o.c. and 1 1/2" from ends.
37. Wood astragal 1 1/2" x 1 1/8".
38. Dow Corning 795 Silicon Sealant.
39. 1" x 2 1/4" x 1/16" s/stl strike plate attached to door panel top & bottom rails with two No. 6 x 1 1/2" s/stl SMS screws.

APPROVED AS COMPLYING WITH THE SOUTH FLORIDA BUILDING CODE
DATE JUN 07 2001
BY Manuel Perez
PRODUCT CONTROL DIVISION
BUILDING CODE COMPLIANCE OFFICE
ACCEPTANCE NO.

W. W. SCHAEFER ENGINEERING & CONSULTING, P.A.
600 SANDTREE DRIVE; SUITE 203B
PALM BEACH GARDENS, FL 33403
PHONE: 561-775-4902; FAX: 561-775-4903

APR 25 2001

WARREN W. SCHAEFER, P.E.
STRUCTURAL ENGINEER; P.E. NO. 44135

ULTIMATE-DOOR OF PALM BEACH, INC. (DADE)
2800 2ND AVENUE NORTH
LAKE WORTH, FL 33461
PHONE: 561-642-2828; FAX: 561-642-9882

SCALE: 3"=1'-0"
DRAWN BY: W.W.S.
TITLE SIDELITES/TRANSOMS
DATE: 10/02/97

REV. NO.	DESCRIPTION	DATE

529B
DRAWING NO.

SHEET 4 OF 4