MIAMI-DADE

**MIAMI-DADE** COUNTY, FLORIDA
METRO-DADE FLAGLER BUILDING

**BUILDING CODE COMPLIANCE OFFICE**
METRO-DADE FLAGLER BUILDING
140 WEST FLAGLER STREET, SUITE 1603
MIAMI, FLORIDA 33130-1563
(305) 375-2901 FAX (305) 375-2908

**CONTRACTOR LICENSING SECTION**
(305) 375-2527 FAX (305) 375-2558

**CONTRACTOR ENFORCEMENT DIVISION**
(305) 375-2966 FAX (305) 375-2908

**PRODUCT CONTROL DIVISION**
(305) 375-2902 FAX (305) 372-6339

# PRODUCT CONTROL NOTICE OF ACCEPTANCE

**Hurst Awning Co., Inc.**
**5795 N.W. 36 Avenue**
**Miami ,FL 33142**

Your application for Notice of Acceptance (NOA) of:
**Super Extruded Aluminum Roll-Up Shutter**
under Chapter 8 of the Code of Miami-Dade County governing the use of Alternate Materials and Types of Construction, and completely described herein, has been recommended for acceptance by the Miami-Dade County Building Code Compliance Office (BCCO) under the conditions specified herein.

This NOA shall not be valid after the expiration date stated below. BCCO reserves the right to secure this product or material at any time from a jobsite or manufacturer's plant for quality control testing. If this product or material fails to perform in the approved manner, BCCO may revoke, modify, or suspend the use of such product or material immediately. BCCO reserves the right to revoke this approval, if it is determined by BCCO that this product or material fails to meet the requirements of the South Florida Building Code.

The expense of such testing will be incurred by the manufacturer.

**ACCEPTANCE NO.: 01-0126.01**
**EXPIRES: 02/08/2006**

Raul Rodriguez
Chief Product Control Division

**THIS IS THE COVERSHEET, SEE ADDITIONAL PAGES FOR SPECIFIC AND GENERAL CONDITIONS**
**BUILDING CODE & PRODUCT REVIEW COMMITTEE**

This application for Product Approval has been reviewed by the BCCO and approved by the Building Code and Product Review Committee to be used in Miami-Dade County, Florida under the conditions set forth above.

Francisco J. Quintana, R.A.
Director
Miami-Dade County
Building Code Compliance Office

**APPROVED: 04/12/2001**

**Hurst Awning Company, Inc.**

**ACCEPTANCE No.:** **01-0126.01**

**APPROVED** : APR 1 2 2001

**EXPIRES** : **February 08, 2006**

## NOTICE OF ACCEPTANCE: SPECIFIC CONDITIONS

**1. SCOPE**

**1.1** This **renews** the Notice of Acceptance No. 98-1214.09, which was issued on 01/28/1999. It approves an extruded aluminum roll-up shutter, as described in Section 2 of this Notice of Acceptance, designed to comply with the South Florida Building Code, 1994 Edition for Miami-Dade County, for the locations where the pressure requirements, as determined by SFBC Chapter 23, do not exceed the Design Pressure Rating values indicated in the approved drawings.

**2. PRODUCT DESCRIPTION**

**2.1** The **"Super Roll-Up" Aluminum Roll-Up Shutter** and its components shall be constructed in strict compliance with the following documents: Drawing No. **95-187**, Sheets 1 through 10 of 10, dated 06/12/95, revised on 11/30/95, titled "Super Roll-Up Shutter," prepared by Knezevich & Associates, Inc., signed and sealed by V. J. Knezevich, P.E., bearing the Miami-Dade County Product Control Approval stamp with the Notice of Acceptance number and approval date by the Miami-Dade County Product Control Division. These documents shall hereinafter be referred to as the approved drawings.

**3. LIMITATIONS**

**3.1** Minimum slat engagement shall be: 1.3".

**3.2** Minimum separation from interior storm bar to glass being protected shall be 2".

**3.3** All permanent set components, included but not limited to embedded anchor bolts, threaded cones, metal shields, headers and sills, must be protected against corrosion, contamination and damage at all time.

**4. INSTALLATION**

**4.1** The extruded aluminum roll-up shutter and its components shall be installed in strict compliance with the approved drawings.

**5. LABELING**

**5.1** Each unit shall bear a permanent label with the manufacturer's name or logo, city, state and following statement: "Miami-Dade County Product Control Approved".

**6. BUILDING PERMIT REQUIREMENTS**

**6.1** Application for building permit shall be accompanied by copies of the following:

**6.1.1** This Notice of Acceptance.

**6.1.2** Duplicate copies of the approved drawings, as identified in Section 2 of this Notice of Acceptance, clearly marked to show the components selected for the proposed installation.

**6.1.3** Any other documents required by the Building Official or the South Florida Building Code (SFBC) in order to properly evaluate the installation of this system.

Manuel Perez

Manuel Perez, P.E., Product Control Examiner
Product Control Division

**Hurst Awning Company, Inc.**

**ACCEPTANCE No.:** 01-0126.01

**APPROVED** : APR 12 2001

**EXPIRES** : February 08, 2006

## NOTICE OF ACCEPTANCE: STANDARD CONDITIONS

1. Renewal of this Acceptance (approval) shall be considered after a renewal application has been filed and the original submitted documentation, including test supporting data, engineering documents, are no older than eight (8) years.

2. Any and all approved products shall be permanently labeled with the manufacturer's name, city, state, and the following statement: "Miami-Dade County Product Control Approved", or as specifically stated in the specific conditions of this Acceptance.

3. Renewals of Acceptance will not be considered if:
   a. There has been a change in the South Florida Building Code affecting the evaluation of this product and the product is not in compliance with the code changes;
   b. The product is no longer the same product (identical) as the one originally approved.
   c. If the Acceptance holder has not complied with all the requirements of this acceptance, including the correct installation of the product;
   d. The engineer, who originally prepared, signed and sealed the required documentation initially submitted, is no longer practicing the engineering profession.

4. Any revision or change in the materials, use, and/or manufacture of the product or process shall automatically be cause for termination of this Acceptance, unless prior written approval has been requested (through the filing of a revision application with appropriate fee) and granted by this office.

5. Any of the following shall also be grounds for removal of this Acceptance:
   a. Unsatisfactory performance of this product or process;
   b. Misuse of this Acceptance as an endorsement of any product, for sales, advertising or any other purpose.

6. The Notice of Acceptance number preceded by the words Dade County, Florida, and followed by the expiration date may be displayed in advertising literature. If any portion of the Notice of Acceptance is displayed, then it shall be done in its entirety.

7. A copy of this Acceptance as well as approved drawings and other documents, where it applies, shall be provided to the user by the manufacturer or its distributors and shall be available for inspection at the job site at all times. The engineer does not need to reseal the copies.

8. Failure to comply with any section of this Acceptance shall be cause for termination and removal of Acceptance.

9. This Acceptance contains pages 1, 2, and this last page 3.

**END OF THIS ACCEPTANCE**

Manuel Perez

Manuel Perez, P.E., Product Control Examiner
Product Control Division

**Hurst Awning Company, Inc.**

**ACCEPTANCE No.:** **01-0126.01**

**APPROVED** : APR 12 2001

**EXPIRES** : **February 08, 2006**

**NOTICE OF ACCEPTANCE: EVIDENCE SUBMITTED**

*(For File ONLY. Not part of NOA.)*

**A. DRAWINGS**

1. *Drawing prepared by Knezevich & Associates, Inc. titled "Super Roll-Up Shutter," Drawing No. 95-187, dated June 12, 1995, with latest revision on November 30, 1995, sheets 1 through 10 of 10, signed and sealed by V.J. Knezevich, P.E.*

**B. TESTS**

1. *Test report on Large Missile Impact Test, Cyclic Wind Pressure Test and Uniform Static Air Pressure originally submitted in file No. 95-0908.07.*

**C. CALCULATIONS**

1. *Comparative analysis and anchor calculations originally submitted in file No. 95-0908.07.*

**D. MATERIAL CERTIFICATIONS**

1. *Submitted in file No. 95-0908.07.*

**E. STATEMENTS**

1. Letter from Hurst Awning Company, Inc., dated January 4, 1999, stating that the product has not changed since it was originally approved, signed by Frank Cornelius.
2. Letter of no change issue by Hurst Awning Company, Inc., dated 03/13/200 and signed by F. S. Cornelius.

**F. OTHER**

1. *This NOA renews NOA No. 95-0908.07.*
2. *EVIDENCE SUBMITTED in original approval:*

Tests:

**A.** Test report on Large Missile Impact, Cyclic Loading and Uniform Static Air Pressure Test of extruded aluminum roll-up shutters, prepared by Construction Testing Corporation, Report No. CTC 95-024, dated June 21, 22, 26, 27, 28 and 29, 1995, signed and sealed by Christopher G. Tyson, P.E.

**B.** Test report on Large Missile Impact Test of a storm bar prepared by Construction Testing Corporation, Report No. CTC 95-024, dated June 21, 22, 26, 27, 28 and 29, 1995, signed and sealed by Christopher G. Tyson, P.E.

Drawing:

**A.** Drawing No. 95-187 "Roll Up Shutter", Sheets 1 thru 10 of 10, prepared by Knezevich & Associates, Inc., dated 06/12/95, revision 1 dated 11/30/95, signed and sealed on September 1, 1995 by V.J. Knezevich, P.E.

Manuel Perez

Manuel Perez, P.E., Product Control Examiner
Product Control Division

**Hurst Awning Company, Inc.**

**ACCEPTANCE No.:** 01-0126.01

**APPROVED** : APR 12 2001

**EXPIRES** : February 08, 2006

## NOTICE OF ACCEPTANCE: EVIDENCE SUBMITTED

*(For File ONLY. Not part of NOA.)*

Material Certification:

**A.** Mill Certification of Chemical Composition and Physical Properties: dated December 13, 1994, for aluminum alloy 6063 T6 by Indalex with chemical composition and physical properties.

**B.** Tensile Test Report No. 5FM-1503 prepared by QC Metallurgical, Inc. dated 07/05/95, signed and sealed by Frank Grate, P.E.

Calculations:

**A.** Comparative analysis, slat, storm bar, header, mullion and anchor calculations, 65 total pages, dated 09/01/95, signed and sealed by V.J. Knezevich, P.E.

*3. TEST RESULTS:*

| TEST | TEST LOAD | DESIGN LOAD | Deflection |
|---|---|---|---|
| LARGE MISSILE IMPACT TEST<br>SFBC PA 201-94 | SATISFACTORY<br>CTC 95-024 | _____ | 2.00" Max. |
| CYCLIC WIND PRESSURE TEST<br>SFBC PA 203-94 POSITIVE | +120.0 PSF<br>CTC 95-024 | +80.0 PSF<br>CTC 95-024 | _____ |
| CYCLIC WIND PRESSURE TEST<br>SFBC PA 203-94 NEGATIVE | -175.5 PSF<br>CTC 95-024 | -135.0 PSF<br>CTC 95-024 | _____ |
| UNIFORM STATIC AIR PRESSURE TEST<br>SFBC PA 202-94 POSITIVE | +166.4 PSF<br>CTC 95-024 | +111.0 PSF<br>CTC 95-024 | @ Design<br>1.938" |
| UNIFORM STATIC AIR PRESSURE TEST<br>SFBC PA 202-94 NEGATIVE | -124.8 PSF<br>CTC 95-024 | -83.2 PSF<br>CTC 95-024 | _____ |
| LARGE MISSILE IMPACT TEST<br>SFBC PA 201-94 (120" long aluminum Storm Bar) | SATISFACTORY<br>CTC 95-024 | _____ | 0.44" Max. |
| **DESIGN PRESSURE RATING**<br>**For Comparative Analysis Results see Dwg. No. 95-187:**<br>**Slat Span Chart, Schedule B Sheet 4 of 10**<br>**Storm Bar Chart, Schedule I Sheet 6 and 7 of 10**<br>**Header Length Chart Sheet 9 and 10 of 10**<br>**Mullion Span Chart Sheet 8 of 10** | _____ | _____ | _____ |

Manuel Perez, P.E., Product Control Examiner
Product Control Division

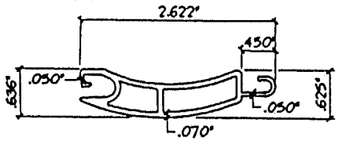


1 ROLL-UP SLAT
HALF SIZE
6063-T6 ALUMINUM ALLOY

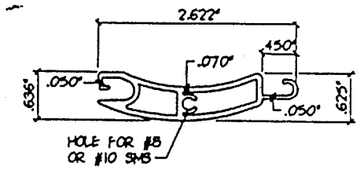


1a ALT. ROLL-UP SLAT
HALF SIZE
6063-T6 ALUMINUM ALLOY

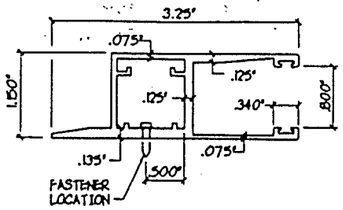


2 ALT. SIDE RAIL
HALF SIZE
6063-T6 ALUMINUM ALLOY

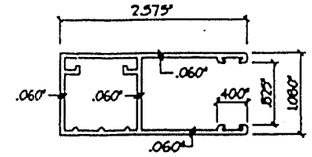


2a ALT. SIDE RAIL
HALF SIZE
6063-T6 ALUMINUM ALLOY
MAX. DESIGN LOAD = + 80 PSF
- 105 PSF

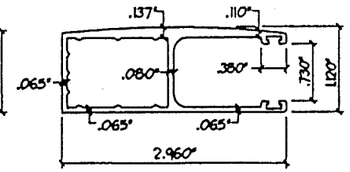


2b ALT. SIDE RAIL
HALF SIZE
6063-T6 ALUMINUM ALLOY

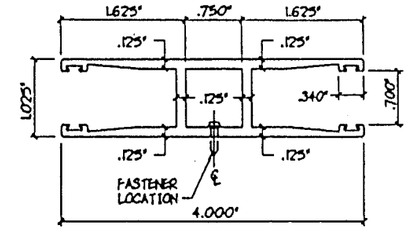


3 SIDE RAIL
HALF SIZE
6063-T6 ALUMINUM ALLOY

NOTES:

1. THIS ROLL-UP SHUTTER SYSTEM IS DESIGNED IN ACCORDANCE WITH THE SOUTH FLORIDA BUILDING CODE, 1994 EDITION, AND THE SOUTH FLORIDA BUILDING CODE, 1994 BROWARD COUNTY EDITION.
2. POSITIVE AND NEGATIVE DESIGN PRESSURE CALCULATIONS SHALL BE PERFORMED IN ACCORDANCE WITH ASCE 7-88 'MINIMUM DESIGN LOADS FOR BUILDINGS AND OTHER STRUCTURES'.
3. ALUMINUM EXTRUSIONS SHALL BE 6063-T6 ALUMINUM ALLOY, U.O.N.
4. EACH SHUTTER ASSEMBLY SHALL BE PERMANENTLY LABELED ON HOOD OR GUIDE RAIL AS FOLLOWS:
   HURST AWNING CO., INC.
   MIAMI, FL.
   DADE COUNTY PROD. APPRD.
5. ALL BOLTS AND WASHERS SHALL BE GALVANIZED OR STAINLESS STEEL W/ A MIN. Fy = 33 KSI. POP RIVETS SHALL BE 3/16"Ø 5052 ALUM. ALLOY
6. MATERIAL SPECIFICATIONS NOTED HEREIN ARE THE MANUFACTURER'S REPRESENTATION OF MATERIALS TO BE USED IN PRODUCT TESTING.
7. THE DETAILS AND SPECIFICATIONS SHOWN HEREIN REPRESENT THE PRODUCTS TESTED FOR IMPACT, CYCLIC AND UNIFORM STATIC AIR PRESSURE IN CONFORMANCE W/ DADE COUNTY PROTOCOLS PA 201, 202, AND 203.

   DESIGN IS BASED ON CTC TEST REPORT No. 95-8824.
8. DESIGN CRITERIA FOR MULTIPLE SPANS:
   a. MAXIMUM DEFLECTION OF OUTSIDE HEADERS = L/30
   b. MAXIMUM DEFLECTION OF POSITIVE (INSIDE) STORM BARS = L/30 OR 1"
      (OPTIONAL) L/30 OR 0.5"
   c. MAXIMUM DEFLECTION OF NEGATIVE (OUTSIDE) STORM BARS = L/30
   d. MAXIMUM DEFLECTION OF SLATS = L/30 OR 2"
   e. MAXIMUM DEFLECTION OF MULIONS = L/180

INSTRUCTIONS:

DETERMINE ASCE 7-88 WIND LOAD ON OPENING TO BE COVERED WITH A ROLL UP SHUTTER.

DETERMINE THE SLAT SPAN THAT YOU WILL NEED TO COVER THE OPENING.

DETERMINE IF YOU WILL NEED A SINGLE SPAN, DOUBLE SPAN OR THREE OR MORE SPANS TO COVER THE OPENING.

SINGLE SLAT SPANS
FOR A SINGLE SPAN, SEE SCHEDULE "B", ALLOWABLE SLAT SPANS ON PAGE 4. LOCATE THE DESIGN WIND LOAD, AND THEN READ THE ALLOWABLE SLAT SPAN.

MULTIPLE SLAT SPANS WITH STORM BARS
FOR MULTIPLE SPANS, UTILIZING STORM BARS, SEE SCHEDULES F & G ON PAGE 6 & 7 FOR POSITIVE & NEGATIVE DESIGN WIND LOADS AND STORM BARS. THE LAST ROW OF EACH DESIGN LOAD INDICATES THE MAX. ALLOWABLE SLAT SPAN. UTILIZING THAT OR A LESSER SLAT SPAN, READ SCHEDULE HORIZONTALLY FROM LEFT TO RIGHT, UNTIL YOU FIND A STORM BAR SIZE AND HEIGHT THAT FITS THE OPENING.

MULLIONS
FOR ALLOWABLE SLAT SPANS, UTILIZING A PERMANENT MULLION, SEE SCHEDULE "H" ON PAGE 8. SELECT YOUR DESIGN WIND LOAD. THE LAST ROW OF EACH DESIGN LOAD INDICATES THE MAX. ALLOWABLE SLAT SPAN. UTILIZING THAT OR A LESSER SPAN, READ FROM LEFT TO RIGHT AND SELECT THE PERMANENT MULLION THAT HAS SUFFICIENT HEIGHT FOR YOUR OPENING.

FOR PROPER CONNECTIONS AT THE TOP AND BOTTOM OF STORM BARS AND MULLIONS, SEE SCHEDULE "C" OR "D", PAGE 5. EACH STORM BAR AND MULLION SCHEDULE HAS REACTION LOADS INDICATED ON THE SCHEDULE TO THE RIGHT OF THE ALLOWABLE SPAN. TAKE THAT NUMBER AND ENTER SCHEDULE "C" FOR A TENSION CONNECTION OR SCHEDULE "D" FOR A SHEAR CONNECTION TO DETERMINE THE TYPE AND SIZE OF ANCHOR AS WELL AS THE EMBEDMENT INTO CONCRETE, CONCRETE BLOCK OR WOOD. THIS SCHEDULE WILL ALSO GIVE YOU THE SIZE AND THICKNESS OF THE ALUMINUM ANGLES TO BE USED AS WELL AS THE TEK SCREW ATTACHMENT OF THE ANGLE TO THE STORM BAR.

HEADERS
HEADERS FOR STORM BARS CAN BE FOUND IN SCHEDULE "I" ON PAGE 9 & 10. SELECT THE DESIGN WIND LOAD AND ENTER SCHEDULE "I". NOTE THAT THE MAXIMUM ALLOWABLE OPENING HEIGHT IS SHOWN AT THE TOP OF THE SCHEDULE. READ ACROSS FROM LEFT TO RIGHT FROM YOUR DESIGN WIND LOAD UNTIL YOU INTERSECT THE COLUMN THAT SHOWS YOUR SELECTED OPENING HEIGHT. SEVERAL STORM BAR SIZES ARE IN THE SCHEDULE. YOU MAY CHOOSE FROM THE COLUMN THAT BEST MEETS YOUR REQUIREMENTS.

CONNECTIONS FOR HEADERS MAY ALSO BE FOUND IN SCHEDULES "C" AND "D" (SEE REACTIONS FOR HEADERS IN HEADER REACTION SCHEDULE E, PAGE 5.

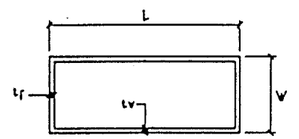


BOX BEAM (TYP A)
4 5 7 9 10 12 13 18 21 22

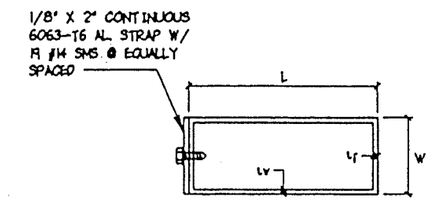


BOX BEAM W/ STRAP (TYPE B)
6 8 11

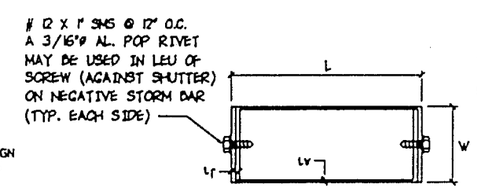


LAP BEAM (TYPE C)
14

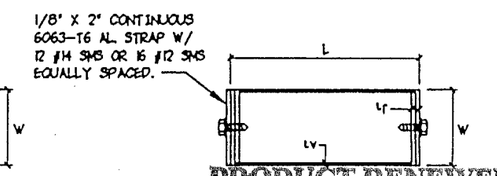


LAP BEAM W/ STRAP (TYPE D)
15

A MEMBER SCHEDULE
SCALE 3" = 1'-0"
6063-T6 ALUMINUM ALLOY

| INDEX | |
|---|---|
| SHEET NO. | DESCRIPTION |
| 1 | GENERAL NOTES - COMPONENTS |
| 2 | SIDE RAIL CONNECTIONS & SECTIONS |
| 3 | TYPICAL ELEVATIONS & SECTIONS |
| 4 | SLAT SPAN SCHEDULE - HEADER - DRUM SUPPORT |
| 5 | ANCHOR SCHEDULE |
| 6 | NEGATIVE (EXTERIOR) STORM BAR SCHEDULE |
| 7 | POSITIVE (INTERIOR) STORM BAR SCHEDULE |
| 8 | PERMANENT MULLION SCHEDULE |
| 9 | HEADER SCHEDULE (40 PSF TO 140 PSF DESIGN LOADS) |
| 10 | HEADER SCHEDULE (150 PSF TO 230 PSF DESIGN LOADS) |

STORM BAR, HEADER, MULLION, BUILDOUT AND ANGLE MEMBER - SCHEDULE A

| MEMBER MARK | MEMBER TYPE | W (INCHES) | L (INCHES) | Tf (INCHES) | Tw (INCHES) | 2" x 1/8" AL. STRAP REQUIRED |
|---|---|---|---|---|---|---|
| 4 | A | 1-1/2 | 3 | .250 | .125 | |
| 5 | A | 2 | 3 | .125 | .125 | |
| 6 | B | 2 | 3 | .125 | .125 | YES * |
| 7 | A | 2 | 4 | .125 | .125 | |
| 8 | B | 2 | 4 | .125 | .125 | YES * |
| 9 | A | 2 | 4 | .250 | .250 | |
| 10 | A | 2 | 5 | .125 | .125 | |
| 11 | B | 2 | 5 | .125 | .125 | YES * |
| 12 | A | 2 | 6 | .125 | .125 | |
| 13 | A | 2 | 7 | .125 | .125 | |
| 14 | C | 2 | 9 | .224 | .072 | |
| 15 | D | 2 | 9 | .224 | .072 | YES * |
| 16 | ANGLE | 2 MIN. | 2 MIN. | .125 | .125 | |
| 17 | ANGLE | 2 MIN. | 2 MIN. | .250 | .250 | |
| 18 | A | 2 | 2 | .125 | .125 | |
| 19 | A | 3 | 3 | .125 | .125 | |
| 20 | B | 4 | 4 | .125 | .125 | |
| 21 | A | 1 | 2 | .250 | .093 | |
| 22 | A | 2 | 2 | .125 | .125 | |

* ONE CONTINUOUS STRAP REQUIRED ON THE OUTSIDE SURFACE OF OUTSIDE STORM BAR ONLY.

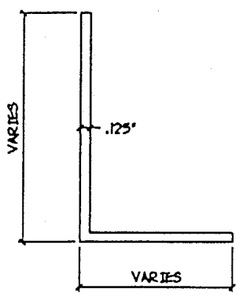


16 ANGLE
HALF SIZE
6063-T6 ALUMINUM ALLOY

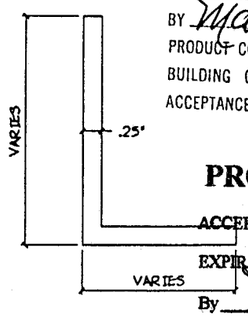


17 ANGLE
HALF SIZE
6063-T6 ALUMINUM ALLOY

PRODUCT RENEWED
01-0126.01
EXPIRATION DATE 02/08/2006
By
PRODUCT CONTROL DIVISION
BUILDING CODE COMPLIANCE OFFICE
APPROVED AS COMPLYING WITH THE SOUTH FLORIDA BUILDING CODE
DATE FEBRUARY 8, 1996
BY
PRODUCT CONTROL DIVISION
BUILDING CODE COMPLIANCE OFFICE
ACCEPTANCE NO. 95-0908.07

PRODUCT RENEWED
ACCEPTANCE No. 98-1214.09
EXPIRATION DATE December 98-01
By
PRODUCT CONTROL DIVISION
BUILDING CODE COMPLIANCE OFFICE

98-1214.09


KNEZEVICH & ASSOCIATES, INC.
CONSULTING ENGINEERS & PRODUCT TESTING
641 MOKENA DRIVE
MIAMI SPRINGS, FLORIDA 33166
PHONE (305) 883-9571

COPYRIGHT 1995 KNEZEVICH & ASSOCIATES, INC.

SUPER ROLL-UP SHUTTER
HURST AWNING CO., INC.
5795 N.W. 36TH AVE.
MIAMI, FL. 33142
(305) 635-0900

| revisions | | | |
|---|---|---|---|
| no | date | by | description |
| A | 11/30/95 | | COUNTY COMMENTS |

V.J. KNEZEVICH
PROFESSIONAL ENGINEER
Lic. License No. PE 0010983
1995

| | |
|---|---|
| date 6-12-95 | |
| scale AS NOTED | drawn by J.V. HILL |
| design by V.JK | checked by V.JK |
| drawing no. 95-187 | |
| sheet 1 of 10 | |

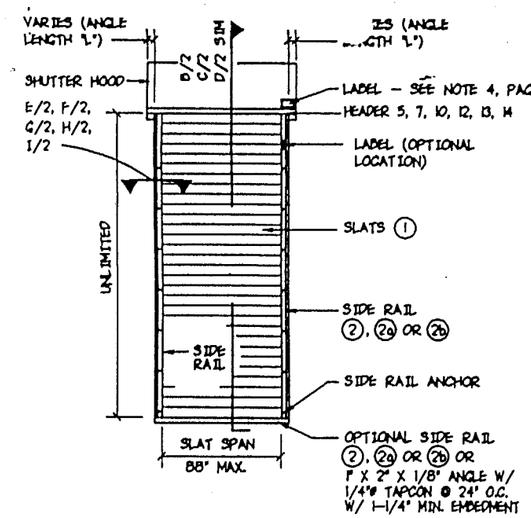


(A) ELEVATION OF SINGLE SPAN CONDITION △1
N.T.S.

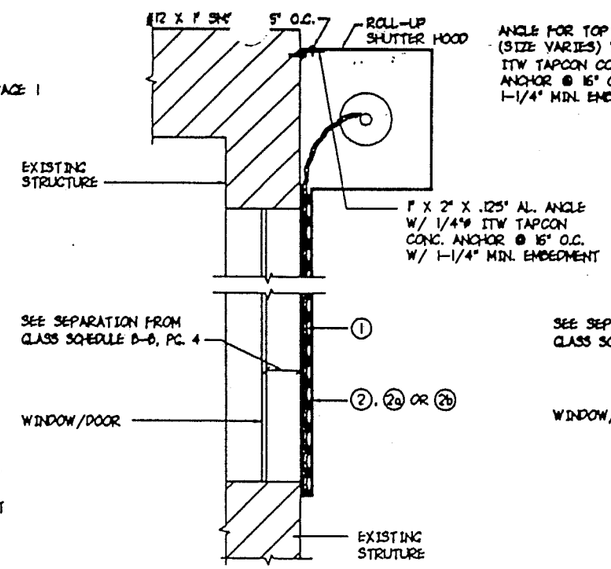


(B) WALL MOUNT SECTION △1
SCALE : 3/4" = 1'-0"

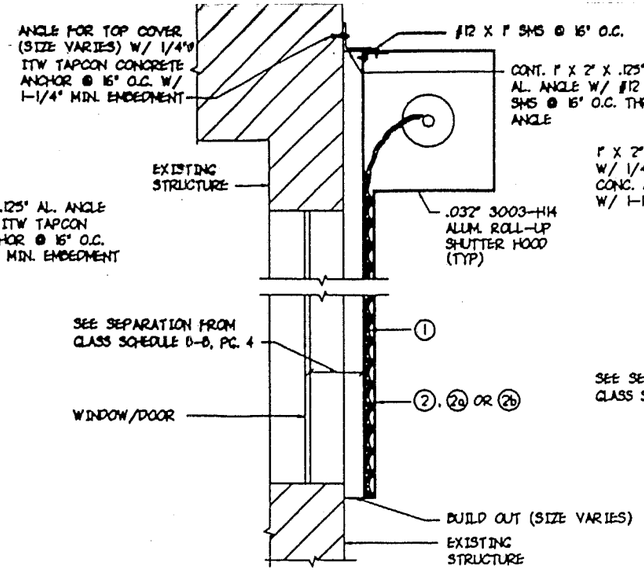


(C) BUILD OUT SECTION △1
SCALE : 3/4" = 1'-0"

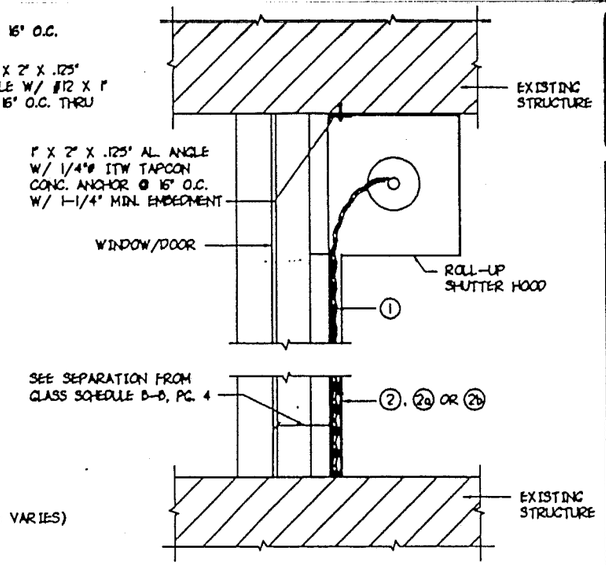


(D) INSIDE MOUNT SECTION △1
SCALE : 3/4" = 1'-0"

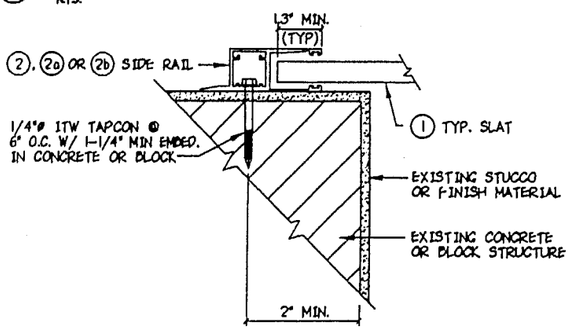


(E) WALL MOUNT (PLAN)
SCALE : 3" = 1'-0"

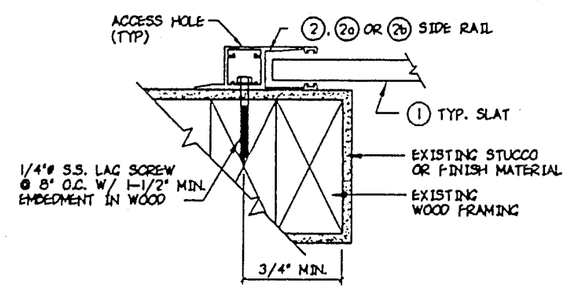


(F) WOOD FRAME WALL MOUNT (PLAN)
SCALE : 3" = 1'-0"

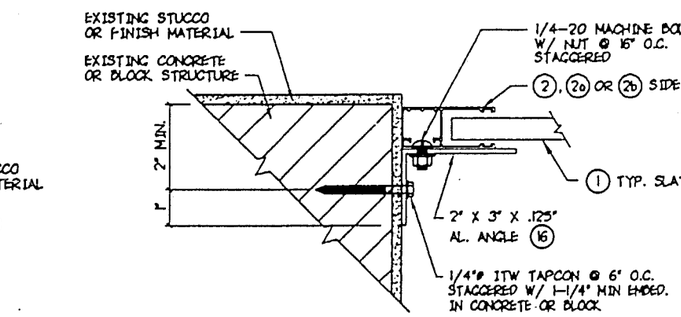


(G) INSIDE MOUNT (PLAN)
SCALE : 3" = 1'-0"

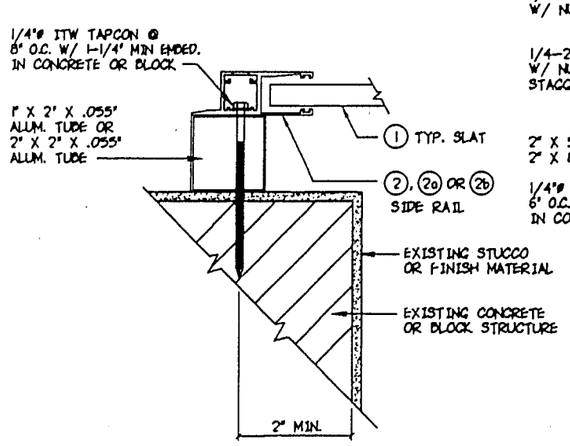


(H) BUILD-OUT MOUNT (PLAN)
SCALE : 3" = 1'-0"

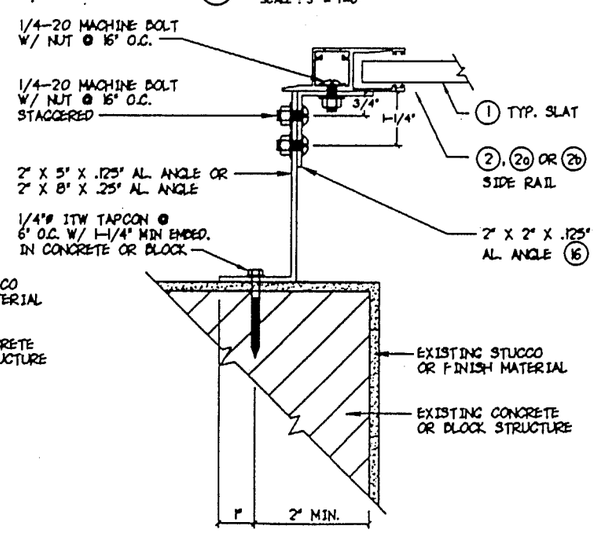


(I) BUILD-OUT MOUNT (PLAN)
SCALE : 3" = 1'-0"

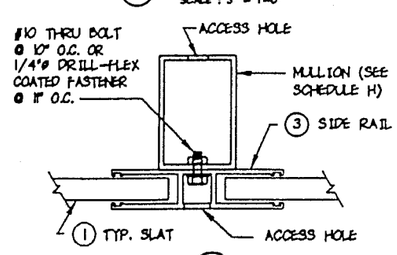


(J)

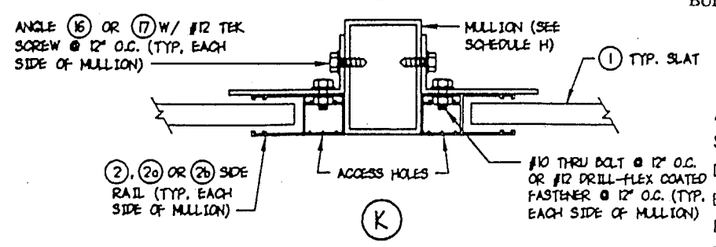


(K)

SIDE RAIL TO MULLION DETAILS
SCALE : 3" = 1'-0"

**PRODUCT RENEWED**
ACCEPTANCE No. 01-0126.01
EXPIRATION DATE 02/08/2006
By [signature]
PRODUCT CONTROL DIVISION
BUILDING CODE COMPLIANCE OFFICE

**PRODUCT RENEWED**
ACCEPTANCE No. 98-1214.09
EXPIRATION DATE December 08-01
By [signature]
PRODUCT CONTROL DIVISION
BUILDING CODE COMPLIANCE OFFICE

APPROVED AS COMPLYING WITH THE SOUTH FLORIDA BUILDING CODE
DATE FEBRUARY 8, 1996
BY [signature]
PRODUCT CONTROL DIVISION
BUILDING CODE COMPLIANCE OFFICE
ACCEPTANCE NO. 95-0908.07


KNEZEVICH & ASSOCIATES, INC.
CONSULTING ENGINEERS & PRODUCT TESTING
641 MOKENA DRIVE
MIAMI SPRINGS, FLORIDA 33166
PHONE (305) 883-9571



COPYRIGHT 1995 KNEZEVICH & ASSOCIATES, INC.


SUPER ROLL-UP SHUTTER

HURST AWNING CO., INC.
5795 N.W. 36TH AVE.
MIAMI, FL. 33142
(305) 635-0900

| revisions | | | |
|---|---|---|---|
| no | date | by | description |
| △1 | 11/30/95 | | COUNTY COMMENTS |

V.J. KNEZEVICH
PROFESSIONAL ENGINEER
Fl. License No. PE 0010983
DEC 6 1995

| | |
|---|---|
| date 6-12-95 | |
| scale AS NOTED | drawn by J.V. HILL |
| design by V.J.K | checked by V.J.K |
| drawing no. 95-187 | |
| sheet 2 of 10 | |

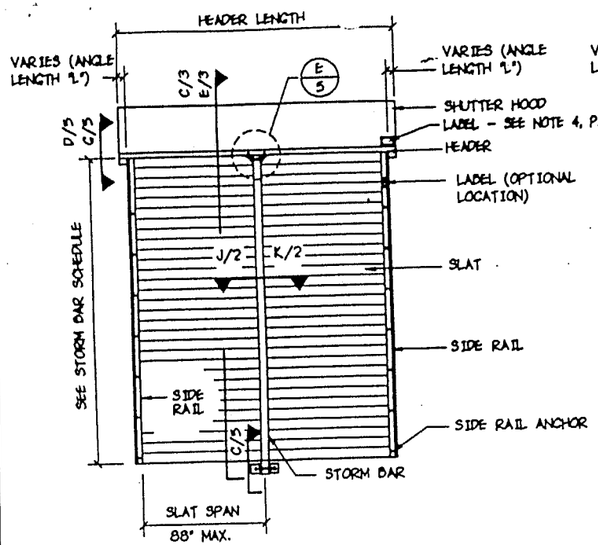


Ⓐ WALL MOUNT & BUILD OUT ELEVATION ⚠

N.T.S.

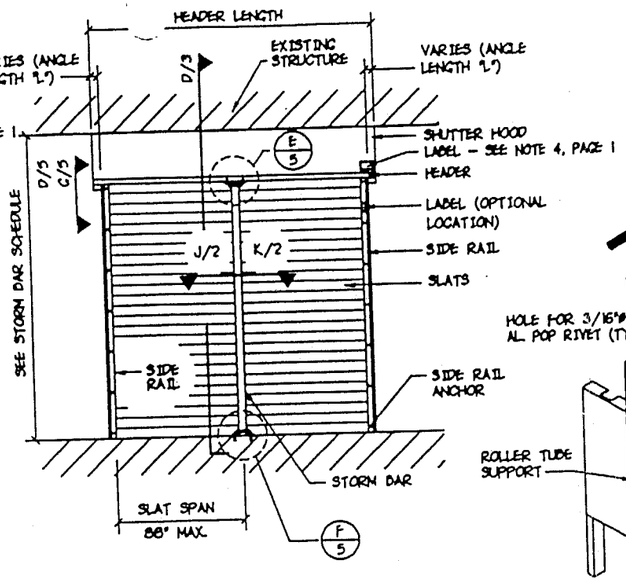


Ⓑ INSIDE MOUNT ELEVATION ⚠

N.T.S.

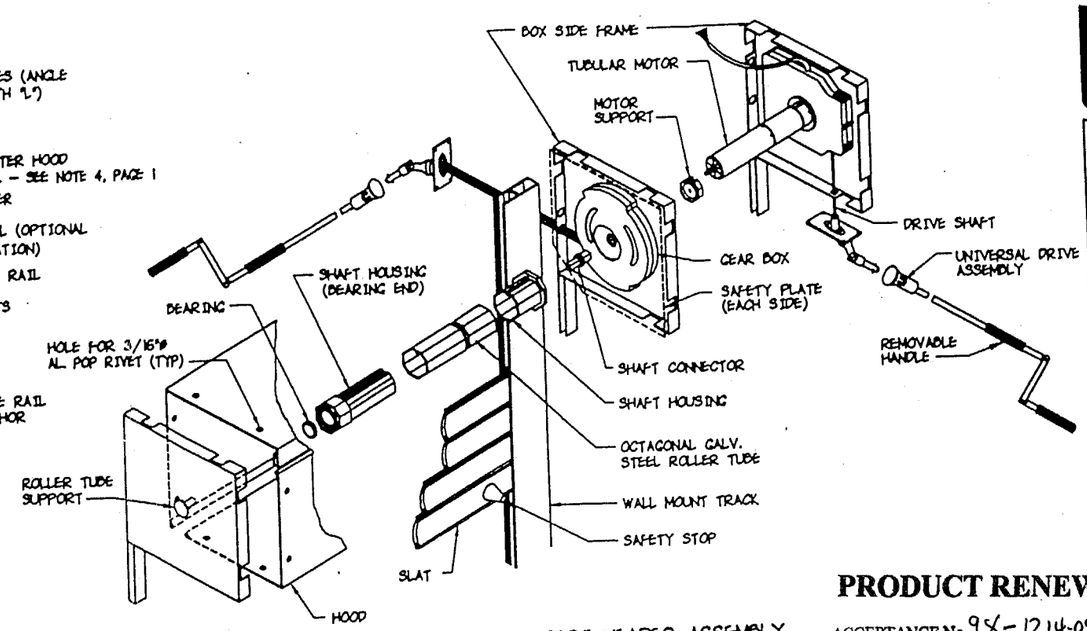


ISOMETRIC OF CAST HEADER ASSEMBLY

N.T.S.

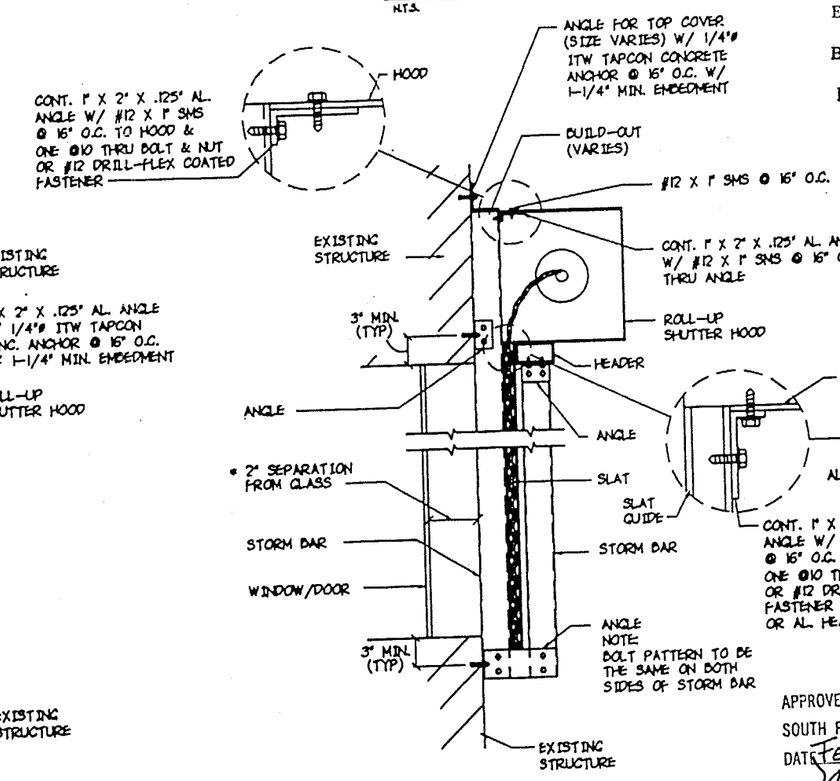


Ⓔ BUILD-OUT SECTION W/ STORM BAR

SCALE : 3/4" = 1'-0"

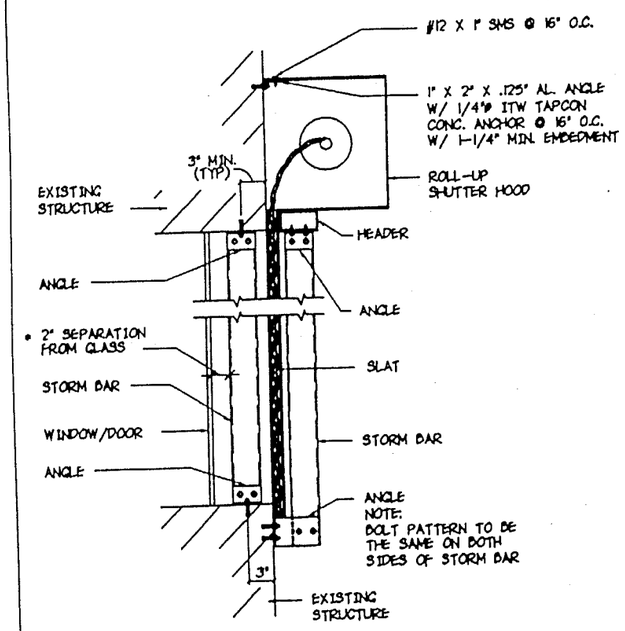


Ⓒ WALL MOUNT SECTION W/ STORM BAR

SCALE : 3/4" = 1'-0"

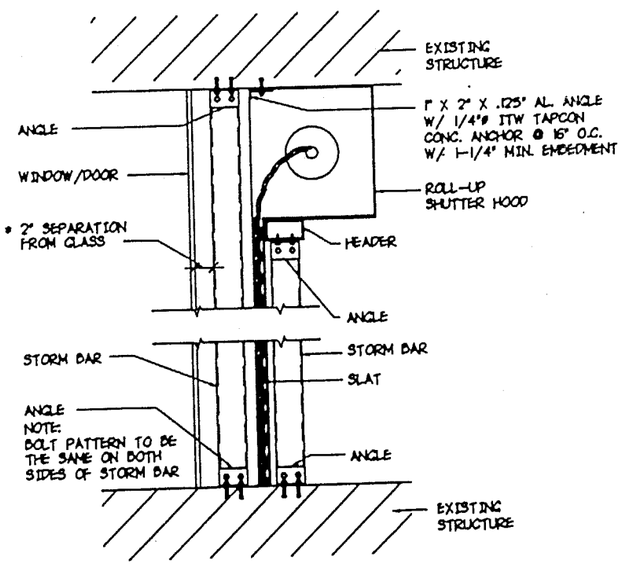


Ⓓ INSIDE MOUNT SECTION W/ STORM BAR

SCALE : 3/4" = 1'-0"

* 1-1/2" SEPARATION MAY BE USED WHEN POSITIVE LOADED STORM BARS FROM SCHEDULE C ARE USED

**PRODUCT RENEWED**

ACCEPTANCE No. 98-1214.09

EXPIRATION DATE December 08-01

By Manuel Perez

PRODUCT CONTROL DIVISION
BUILDING CODE COMPLIANCE OFFICE

**PRODUCT RENEWED**

ACCEPTANCE No. 01-0126.01

EXPIRATION DATE 02/08/2006

By Manuel Perez

PRODUCT CONTROL DIVISION
BUILDING CODE COMPLIANCE OFFICE

APPROVED AS COMPLYING WITH THE SOUTH FLORIDA BUILDING CODE

DATE FEBRUARY 8, 1996

BY Manuel Perez

PRODUCT CONTROL DIVISION
BUILDING CODE COMPLIANCE OFFICE

ACCEPTANCE NO. 95-0908.07

KNEZEVICH & ASSOCIATES, INC.
CONSULTING ENGINEERS & PRODUCT TESTING
641 MIKENA DRIVE
MIAMI SPRINGS, FLORIDA 33166
PHONE (305) 883-9571

COPYRIGHT 1995 KNEZEVICH & ASSOCIATES, INC.

SLIDER ROLL-UP SHUTTER

HURST AWNING CO., INC.
5795 N.W. 36TH AVE.
MIAMI, FL. 33142
(305) 635-0900

| revisions | | | |
|---|---|---|---|
| no | date | by | description |
| 1 | 11/30/95 | | COUNTY COMMENTS |

V.J. KNEZEVICH
PROFESSIONAL ENGINEER
Fl. License No. PE 0010983

DEC 6 1995

| | |
|---|---|
| date 6-12-95 | |
| scale AS NOTED | drawn by J.V. HILL |
| design by V.J.K | checked by V.J.K |
| drawing no. 95-187 | |
| sheet 3 of 10 | |

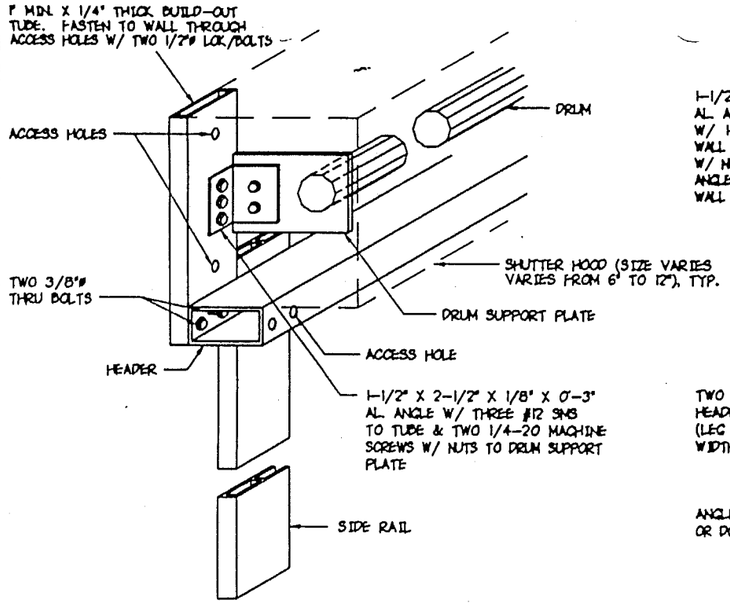


Ⓐ DRUM SUPPORT & HEADER TO BUILD-OUT DETAIL

SCALE : 1-1/2" = 1'-0"

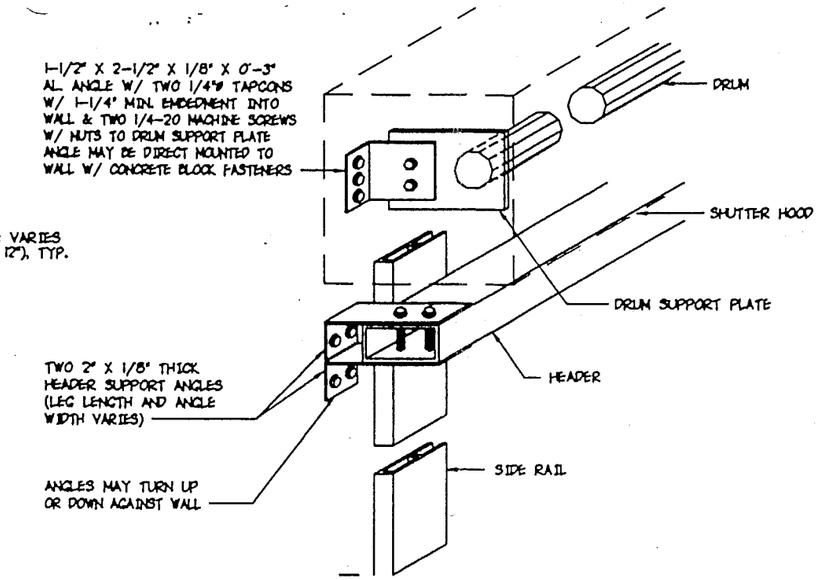


Ⓑ ALT. DRUM SUPPORT & HEADER TO WALL DETAIL

SCALE : 1-1/2" = 1'-0"

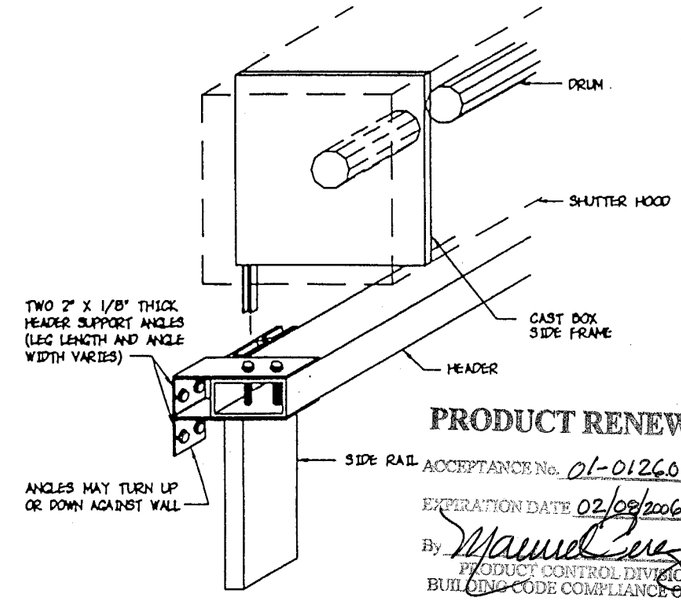


Ⓒ CAST DRUM SUPPORT & HEADER DETAIL

SCALE : 1-1/2" = 1'-0"

PRODUCT RENEWED
ACCEPTANCE No. 01-0126.01
EXPIRATION DATE 02/08/2006
By Manuel Perez
PRODUCT CONTROL DIVISION
BUILDING CODE COMPLIANCE OFFICE

## SLAT SPAN - SCHEDULE B

CONTRACTOR/INSTALLER TO UTILIZE SMALLEST OF POSITIVE LOAD SPAN AND NEGATIVE LOAD SPAN FOR EACH OPENING.

| DESIGN LOAD (P.S.F.) | SPANS FOR POSITIVE LOADS | SPANS FOR NEGATIVE LOADS |
|---|---|---|
| | TOTAL SLAT SPAN (FT-IN) | TOTAL SLAT SPAN (FT-IN) |
| 30.0 | 7 - 1 | 7 - 4 |
| 40.0 | 6 - 7 | 7 - 4 |
| 50.0 | 6 - 3 | 6 - 11 |
| 60.0 | 6 - 0 | 6 - 6 |
| 70.0 | 5 - 9 | 6 - 2 |
| 80.0 | 5 - 6 | 5 - 11 |
| 90.0 | 5 - 5 | 5 - 8 |
| 100.0 | 5 - 3 | 5 - 6 |
| 110.0 | 5 - 2 | 5 - 4 |
| 115.0 | 5 - 1 | 5 - 3 |
| 120.0 | 5 - 0 | 5 - 2 |
| 130.0 | 4 - 11 | 5 - 0 |
| 140.0 | 4 - 10 | 4 - 11 |
| 150.0 | 4 - 9 | 4 - 9 |
| 160.0 | 4 - 8 | 4 - 8 |
| 170.0 | 4 - 7 | 4 - 7 |
| 180.0 | 4 - 6 | 4 - 6 |
| 190.0 | 4 - 5 | 4 - 5 |
| 200.0 | 4 - 5 | 4 - 4 |
| 210.0 | 4 - 4 | 4 - 3 |
| 220.0 | 4 - 4 | 4 - 2 |
| 230.0 | 4 - 3 | 4 - 2 |

## MIN. SEPARATION FROM GLASS SCHEDULE B-B

| POSITIVE DESIGN LOAD (P.S.F.) | ACTUAL SHUTTER SPAN (L) (FT - IN) | MINIMUM SEPARATION FOR INSTALLATIONS ≤ 30' ABOVE GRADE (INCHES) | MINIMUM SEPARATION FOR INSTALLATIONS > 30' ABOVE GRADE (INCHES) |
|---|---|---|---|
| 40.0 | 3 - 0 | 2 | 1-1/4 |
| | 5 - 0 | 2 | 1-3/4 |
| | 6 - 7 | 3 | 3 |
| 50.0 | 3 - 0 | 2 | 1-1/4 |
| | 5 - 0 | 2 | 1-7/8 |
| | 6 - 3 | 3 | 3 |
| 60.0 | 3 - 0 | 2 | 1-1/4 |
| | 5 - 0 | 2 | 2-1/8 |
| | 6 - 0 | 3 | 3 |
| 70.0 | 3 - 0 | 2 | 1-3/8 |
| | 4 - 0 | 2 | 1-5/8 |
| | 5 - 9 | 3 | 3 |
| 80.0 | 3 - 0 | 2 | 1-3/8 |
| | 4 - 0 | 2 | 1-5/8 |
| | 5 - 6 | 3 | 3 |
| 90.0 | 3 - 0 | 2 | 1-3/8 |
| | 4 - 0 | 2 | 1-3/4 |
| | 5 - 5 | 3 | 3 |
| 100.0 | 3 - 0 | 2 | 1-3/8 |
| | 4 - 0 | 2 | 1-3/4 |
| | 5 - 3 | 3 | 3 |
| 110.0 | 3 - 0 | 2 | 1-3/8 |
| | 4 - 0 | 2 | 1-7/8 |
| | 5 - 1 | 3 | 3 |
| 115.0 | 3 - 0 | 2 | 1-3/8 |
| | 4 - 0 | 2 | 1-7/8 |
| | 5 - 0 | 3 | 3 |

NOTE: INTERPOLATE FOR SLAT SPANS AND DEFLECTION BETWEEN THOSE SHOWN.

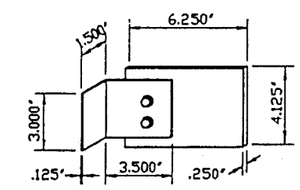


DRUM SUPPORT PLATE DETAIL

SCALE : 1-1/2" = 1'-0"

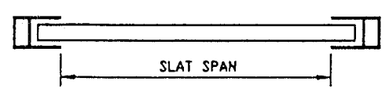


SINGLE SPAN

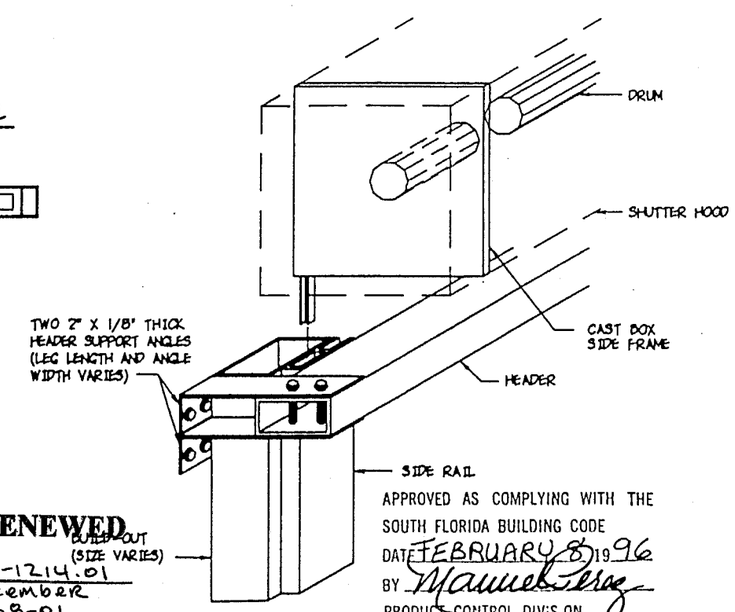


PRODUCT RENEWED
ACCEPTANCE No. 98-1214.01
EXPIRATION DATE December 08-01
By Manuel Perez
PRODUCT CONTROL DIVISION
BUILDING CODE COMPLIANCE OFFICE

APPROVED AS COMPLYING WITH THE SOUTH FLORIDA BUILDING CODE
DATE FEBRUARY 8, 1996
BY Manuel Perez
PRODUCT CONTROL DIVISION
BUILDING CODE COMPLIANCE OFFICE
ACCEPTANCE NO. 95-0908.07

Ⓓ CAST DRUM SUPPORT & HEADER DETAIL W/ BUILD-OUT

SCALE : 1-1/2" = 1'-0"


KNEZEVICH & ASSOCIATES, INC.
CONSULTING ENGINEERS & PRODUCT TESTING
641 MOKENA DRIVE
MIAMI SPRINGS, FLORIDA 33166
PHONE (305) 883-9571



COPYRIGHT 1995 KNEZEVICH & ASSOCIATES, INC.


ROLL-UP SHUTTER

HURST AWNING CO., INC.
5795 N.W. 36TH AVE.
MIAMI, FL. 33142
(305) 635-0900

| revisions | | | |
|---|---|---|---|
| no | date | by | description |
| 1 | 11/30/95 | | COUNTY COMMENTS |

V.J. KNEZEVICH
PROFESSIONAL ENGINEER
FL. License No. PE 0010983

DEC - 6 1995

| | |
|---|---|
| date 6-12-95 | |
| scale AS NOTED | drawn by J.V. HILL |
| design by V.JK | checked by V.JK |
| drawing no. 95-187 | |
| sheet 4 of 10 | |

Block B
Concrete C

## ANCHOR AND FASTENER - SCHEDULE C

RAWL LOK/BOLT - TENSION IN CONCRETE OR BLOCK
RAWL CALK-IN - TENSION IN CONCRETE OR BLOCK

| ANCHOR TYPE | MATERIAL TYPE | STORM BAR & MULLION REACTION (POUNDS) | WALL MOUNT | | | | ANGLE DIMENSIONS | | STORM BAR, MULLION OR HEADER TO ANGLES | |
|---|---|---|---|---|---|---|---|---|---|---|
| | | | DIAMETER (INCHES) | EMBEDMENT DISTANCE (INCHES) | QUANTITY OF FASTENERS PER ANGLE | CONCRETE OR BLOCK EDGE DISTANCE (INCHES) | THICKNESS OF TWO (2) ANGLES (INCHES) | MIN. (L) LENGTH OF EACH ANGLE (INCHES) | NO. OF TEK SCREWS EA. LEG EACH ANGLE | SIZE OF TEK SCREWS |
| LOK/BOLT | B | 600 | 0.250 | 1.125 | 1 | 3.0 | 0.125 | 3.00 | 2 | #12 |
| CALK-IN | B | 850 | 0.375 | 1.250 | 1 | 4.5 | 0.125 | 4.00 | 3 | #12 |
| LOK/BOLT | B | 1200 | 0.250 | 1.125 | 2 | 3.0 | 0.125 | 5.76 | 3 | #12 |
| LOK/BOLT | B | 1200 | 0.250 | 1.125 | 2 | 3.0 | 0.250 | 4.00 | 3 | #12 |
| CALK-IN | B | 1700 | 0.375 | 1.250 | 2 | 4.5 | 0.250 | 5.25 | 3 | #12 |
| CALK-LOK | C | 2500 | 0.500 | 1.5 - 2.25 | 1 | 6.0 | 0.250 | 3.01 | 4 | #14 |
| LOK/BOLT | C | 2700 | 0.375 | 1.625 | 2 | 4.5 | 0.250 | 5.25 | 4 | #14 |
| CALK-IN | C | 4810 | 0.375 | 1.250 | 2 | 4.5 | 0.250 | 11.50 | 6 | #14 |
| LOK/BOLT | C | 5015 | 0.500 | 2.250 | 2 | 6.0 | 0.250 | 11.50 | 7 | #14 |

Block B
Concrete C

## ANCHOR AND FASTENER - SCHEDULE D

RAWL LOK/BOLT - SHEAR IN CONCRETE OR BLOCK
RAWL CALK-IN - SHEAR IN CONCRETE OR BLOCK

| ANCHOR TYPE | MATERIAL TYPE | STORM BAR & MULLION REACTION (POUNDS) | WALL MOUNT | | | | ANGLE DIMENSIONS | | STORM BAR, MULLION OR HEADER TO ANGLES | |
|---|---|---|---|---|---|---|---|---|---|---|
| | | | DIAMETER (INCHES) | EMBEDMENT DISTANCE (INCHES) | QUANTITY OF FASTENERS PER ANGLE | CONCRETE OR BLOCK EDGE DISTANCE (INCHES) | THICKNESS OF TWO (2) ANGLES (INCHES) | MIN. (L) LENGTH OF EACH ANGLE (INCHES) | NO. OF TEK SCREWS EA. LEG EACH ANGLE | SIZE OF TEK SCREWS |
| LOK/BOLT | B | 318 | 0.250 | 1.125 | 2 | 1.25 | 0.125 | SEE DETAIL (B) SHEET 5 of 10 FOR L | 2 | #12 |
| CALK-LOK | B | 635 | 0.250 | .875 - 1.125 | 1 | 3.00 | 0.125 | | 2 | #12 |
| LOK/BOLT | B | 635 | 0.250 | 1.125 | 4 | 1.25 | 0.125 | | 3 | #12 |
| LOK/BOLT | B | 1270 | 0.250 | 1.125 | 2 | 3.00 | 0.125 | | 3 | #12 |
| LOK/BOLT | C | 1625 | 0.375 | 1.625 | 1 | 4.50 | 0.125 | | 3 | #12 |
| CALK-IN | C | 1800 | 0.375 | .875 | 2 | 3.00 | 0.125 | | 3 | #12 |
| LOK/BOLT | C | 3250 | 0.375 | 1.625 | 2 | 4.50 | 0.125 | | 5 | #14 |
| CALK-IN | C | 4220 | 0.375 | 1.250 | 2 | 4.50 | 0.125 | | 6 | #14 |
| CALK-LOK | C | 5800 | 0.500 | 1.5 - 2.25 | 2 | 6.00 | 0.125 | | 8 | #14 |
| LOK/BOLT | C | 5800 | 0.375 | 1.625 | 4 | 4.50 | 0.125 | | 8 | #14 |

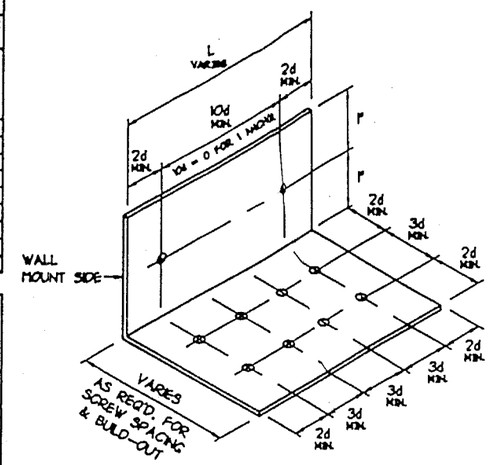


(A) TENSION CONNECTION TO WALL FOR STORM BAR, HEADER, OR MULLION

N.T.S.

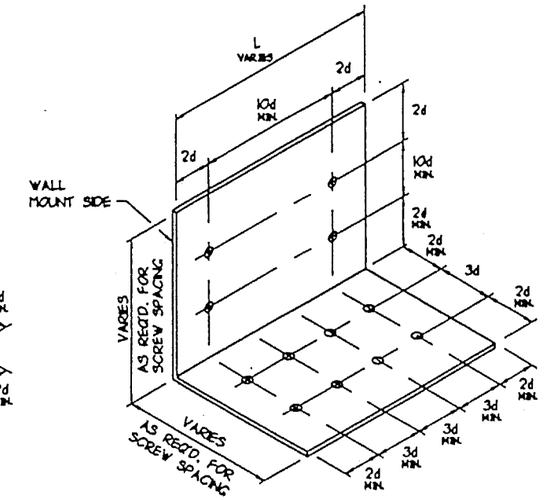


(B) SHEAR CONNECTION TO FLOOR OR CEILING FOR STORM BAR, HEADER, OR MULLION

N.T.S.

NOTE:
ANGLE ISOMETRIC DEPICTS MAXIMUM NUMBER OF ANCHOR BOLTS & TEK SCREWS, AND THEIR ARRANGEMENT. FOR LESS ANCHORS OR TEK SCREWS, ANY 3d OR 10d DIMENSIONS MAY BE = 0.

| NUMBER OF STORM BARS | HEADER REACTION DETERMINATION SCHEDULE E<br>HEADER REACTION EACH END (POUNDS) |
|---|---|
| 1 | .5 X ONE STORM BAR END REACTION |
| 2 | 1 X ONE STORM BAR END REACTION |
| 3 OR MORE | 1.5 X ONE STORM BAR END REACTION |

SEE SCHEDULE B & C ABOVE FOR ANGLE, ANCHOR AND FASTENER QUANTITY AND SIZE.

WOOD FASTENING NOTES:

GALVANIZED STEEL OR 410 STAINLESS STEEL W/ FLUOROCARBON COATING LAG SCREW FOR WOOD, MAY BE USED AT LOADS, QUANTITY & EMBEDMENT INDICATED FOR BLOCK OR CONCRETE. EMBEDMENT SHALL BE AT THE CENTER OF A PRIMARY FRAMING MATERIAL SUCH AS A 2 X WOOD STUD OR A 2 X WOOD HEADER OR SILL PLATE.

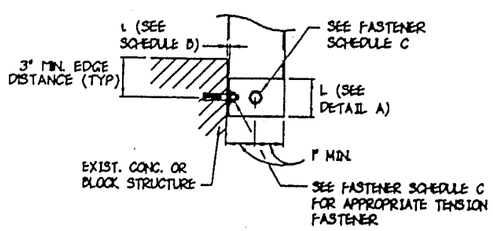


(C) STORM BAR/MULLION TO WALL SECTION

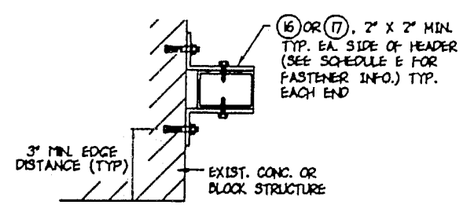


(D) HEADER TO WALL SECTION

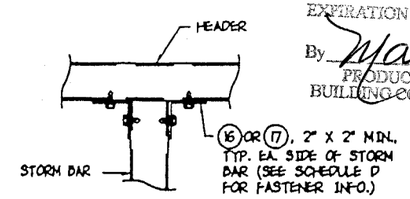


(E) HEADER TO STORM BAR DETAIL

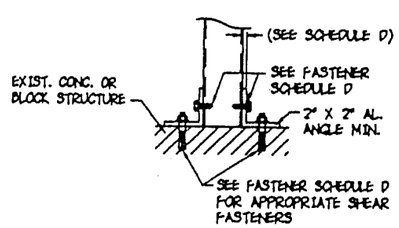


(F) STORM BAR/MULLION TO FLOOR/CEILING DETAIL

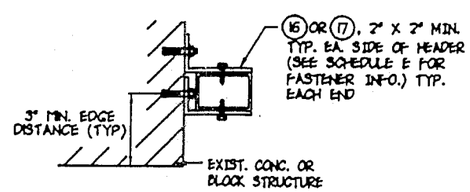


(G) HEADER TO WALL SECTION

## STORM BAR/HEADER CONNECTION DETAILS

SCALE : 1-1/2" = 1'-0"

**PRODUCT RENEWED**
ACCEPTANCE No. 01-0126.01
EXPIRATION DATE 02/08/2006
By Manuel Perez
PRODUCT CONTROL DIVISION
BUILDING CODE COMPLIANCE OFFICE

**PRODUCT RENEWED**
ACCEPTANCE No. 98-1214.09
EXPIRATION DATE December 08.01
By Manuel Perez
PRODUCT CONTROL DIVISION
BUILDING CODE COMPLIANCE OFFICE

APPROVED AS COMPLYING WITH THE SOUTH FLORIDA BUILDING CODE
DATE FEBRUARY 8, 1996
BY Manuel Perez
PRODUCT CONTROL DIVISION
BUILDING CODE COMPLIANCE OFFICE
ACCEPTANCE NO. 95-0908.07


KNEZEVICH & ASSOCIATES, INC.
CONSULTING ENGINEERS & PRODUCT TESTING
641 MOKENA DRIVE
MIAMI SPRINGS, FLORIDA, 33166
PHONE (305) 883-9571

COPYRIGHT 1995 KNEZEVICH & ASSOCIATES, INC.

SUPER ROLL-UP SHUTTER
HURST AWNING CO., INC.
5795 N.W. 36TH AVE.
MIAMI, FL. 33142
(305) 635-0900

| revisions | | | |
|---|---|---|---|
| # | date | by | description |
| 1 | 11/30/95 | | COUNTY COMMENTS |

V.J. KNEZEVICH
PROFESSIONAL ENGINEER
Fl. License No. PE 0010903
DEC - 6 1995

| | |
|---|---|
| date 6-12-95 | |
| scale AS NOTED | drawn by J.V. HILL |
| design by VJK | checked by VJK |
| drawing no. 95-187 | |
| sheet 5 of 10 | |

## EXTERIOR STORM BAR SPAN SCHEDULE (F) - MULTIPLE SPAN CONDITION (ALL SPANS)

| NEGATIVE DESIGN LOAD (P.S.F.) | SLAT SPAN OR STORM BAR SPACING (IN) | STORM BARS - MAX. LENGTH (INCHES) | | | | | | | | | |
|---|---|---|---|---|---|---|---|---|---|---|---|
| | | STORM BAR TYPE | | | | | | | | | |
| | | (4) 1.5" x 3" | (4) END REACTION (POUNDS) | (6) 2" x 3" | (6) END REACTION (POUNDS) | (8) 2" x 4" | (8) END REACTION (POUNDS) | (11) 2" x 5" | (11) END REACTION (POUNDS) | (15) 2" x 9" | (15) END REACTION (POUNDS) |
| 40 | 24 | 144 | 601 | 145 | 604 | 176 | 733 | 205 | 854 | 311 | 1296 |
| | 36 | 119 | 742 | 119 | 745 | 145 | 905 | 169 | 1055 | 259 | 1619 |
| | 48 | 103 | 862 | 103 | 861 | 126 | 1050 | 147 | 1225 | 227 | 1892 |
| | 60 | 93 | 968 | 92 | 963 | 113 | 1178 | 132 | 1375 | 205 | 2135 |
| | 72 | 85 | 1064 | 84 | 1055 | 103 | 1294 | 121 | 1511 | 188 | 2355 |
| | 88 | 77 | 1180 | 76 | 1166 | 94 | 1434 | 110 | 1676 | 172 | 2622 |
| 50 | 24 | 130 | 675 | 130 | 678 | 158 | 823 | 184 | 959 | 281 | 1465 |
| | 36 | 107 | 834 | 107 | 834 | 130 | 1015 | 152 | 1184 | 234 | 1827 |
| | 48 | 93 | 968 | 92 | 963 | 113 | 1178 | 132 | 1375 | 205 | 2135 |
| | 60 | 83 | 1087 | 83 | 1077 | 101 | 1321 | 119 | 1543 | 185 | 2407 |
| | 72 | 76 | 1194 | 75 | 1180 | 93 | 1451 | 109 | 1696 | 170 | 2654 |
| | 88 | 69 | 1324 | 68 | 1304 | 84 | 1604 | 98 | 1881 | 155 | 2954 |
| 60 | 24 | 119 | 742 | 119 | 745 | 145 | 905 | 169 | 1055 | 259 | 1619 |
| | 36 | 98 | 917 | 97 | 914 | 119 | 1115 | 139 | 1302 | 215 | 2017 |
| | 48 | 85 | 1064 | 84 | 1055 | 103 | 1294 | 121 | 1511 | 188 | 2355 |
| | 60 | 76 | 1194 | 75 | 1180 | 93 | 1451 | 109 | 1696 | 170 | 2654 |
| | 72 | 70 | 1312 | 69 | 1292 | 85 | 1589 | 99 | 1863 | 156 | 2925 |
| | 88 | 63 | 1455 | 62 | 1428 | 77 | 1757 | 90 | 2066 | 142 | 3255 |
| 70 | 24 | 110 | 804 | 111 | 806 | 134 | 980 | 157 | 1143 | 241 | 1760 |
| | 36 | 91 | 993 | 90 | 987 | 110 | 1208 | 129 | 1410 | 200 | 2192 |
| | 48 | 79 | 1152 | 78 | 1140 | 96 | 1400 | 112 | 1637 | 175 | 2558 |
| | 60 | 71 | 1293 | 70 | 1274 | 86 | 1567 | 101 | 1836 | 158 | 2882 |
| | 72 | 65 | 1420 | 64 | 1396 | 78 | 1717 | 92 | 2017 | 145 | 3176 |
| | 84 | 60 | 1538 | 59 | 1507 | 73 | 1854 | 86 | 2184 | 135 | 3446 |
| | 86 | 59 | 1559 | 58 | 1528 | 72 | 1879 | 84 | 2214 | 133 | 3496 |
| 80 | 24 | 103 | 862 | 103 | 861 | 126 | 1050 | 147 | 1225 | 227 | 1892 |
| | 36 | 85 | 1064 | 84 | 1055 | 103 | 1294 | 121 | 1511 | 188 | 2355 |
| | 48 | 74 | 1235 | 73 | 1218 | 90 | 1498 | 105 | 1753 | 165 | 2747 |
| | 60 | 66 | 1385 | 65 | 1362 | 80 | 1675 | 94 | 1967 | 149 | 3094 |
| | 72 | 61 | 1521 | 60 | 1492 | 73 | 1835 | 86 | 2161 | 136 | 3409 |
| | 78 | 59 | 1585 | 57 | 1553 | 71 | 1910 | 83 | 2251 | 131 | 3557 |
| | 83 | 57 | 1641 | 55 | 1606 | 68 | 1976 | 80 | 2331 | 127 | 3686 |
| 90 | 24 | 98 | 917 | 97 | 914 | 119 | 1115 | 139 | 1302 | 215 | 2017 |
| | 36 | 80 | 1131 | 80 | 1119 | 98 | 1374 | 114 | 1606 | 178 | 2508 |
| | 48 | 70 | 1312 | 69 | 1292 | 85 | 1589 | 99 | 1863 | 156 | 2925 |
| | 60 | 63 | 1472 | 62 | 1445 | 76 | 1777 | 89 | 2090 | 141 | 3294 |
| | 72 | 57 | 1617 | 56 | 1582 | 69 | 1947 | 82 | 2295 | 129 | 3629 |
| | 78 | 55 | 1684 | 54 | 1647 | 66 | 2026 | 78 | 2390 | 124 | 3786 |
| | 81 | 54 | 1717 | 53 | 1679 | 65 | 2065 | 72 | 2436 | 122 | 3862 |
| 100 | 24 | 93 | 968 | 92 | 963 | 113 | 1178 | 132 | 1375 | 205 | 2135 |
| | 36 | 76 | 1194 | 75 | 1180 | 93 | 1451 | 109 | 1696 | 170 | 2654 |
| | 48 | 66 | 1385 | 65 | 1362 | 80 | 1675 | 94 | 1967 | 149 | 3094 |
| | 60 | 60 | 1554 | 58 | 1523 | 72 | 1873 | 85 | 2206 | 134 | 3484 |
| | 66 | 57 | 1632 | 56 | 1597 | 69 | 1964 | 81 | 2317 | 128 | 3664 |
| | 72 | 55 | 1706 | 53 | 1668 | 66 | 2052 | 77 | 2421 | 123 | 3837 |
| | 79 | 52 | 1787 | 51 | 1746 | 63 | 2148 | 74 | 2534 | 118 | 4027 |
| 110 | 24 | 89 | 1017 | 88 | 1010 | 108 | 1237 | 126 | 1445 | 196 | 2247 |
| | 36 | 73 | 1254 | 72 | 1237 | 89 | 1522 | 104 | 1781 | 162 | 2793 |
| | 48 | 63 | 1455 | 62 | 1428 | 77 | 1757 | 90 | 2066 | 142 | 3255 |
| | 60 | 57 | 1632 | 56 | 1597 | 69 | 1964 | 81 | 2317 | 128 | 3664 |
| | 66 | 54 | 1714 | 53 | 1675 | 65 | 2060 | 77 | 2431 | 122 | 3853 |
| | 72 | 52 | 1790 | 51 | 1749 | 63 | 2152 | 74 | 2539 | 117 | 4035 |
| | 77 | 50 | 1852 | 49 | 1810 | 60 | 2247 | 71 | 2651 | 113 | 4182 |
| 120 | 24 | 85 | 1064 | 84 | 1055 | 103 | 1294 | 121 | 1511 | 188 | 2355 |
| | 36 | 70 | 1312 | 69 | 1292 | 85 | 1589 | 99 | 1863 | 156 | 2925 |
| | 48 | 61 | 1521 | 60 | 1492 | 73 | 1835 | 86 | 2161 | 136 | 3409 |
| | 60 | 55 | 1706 | 53 | 1668 | 66 | 2052 | 77 | 2421 | 123 | 3837 |
| | 66 | 52 | 1790 | 51 | 1749 | 63 | 2152 | 74 | 2539 | 117 | 4035 |
| | 72 | 50 | 1869 | 49 | 1827 | 60 | 2248 | 71 | 2652 | 113 | 4224 |
| | 75 | 49 | 1913 | 48 | 1870 | 59 | 2300 | 69 | 2714 | 110 | 4328 |
| 130 | 24 | 82 | 1109 | 81 | 1098 | 100 | 1348 | 116 | 1575 | 182 | 2458 |
| | 36 | 67 | 1367 | 66 | 1345 | 81 | 1654 | 96 | 1942 | 150 | 3053 |
| | 48 | 59 | 1585 | 57 | 1553 | 71 | 1910 | 83 | 2251 | 131 | 3557 |
| | 60 | 52 | 1776 | 51 | 1736 | 63 | 2136 | 74 | 2520 | 118 | 4002 |
| | 66 | 50 | 1863 | 49 | 1821 | 60 | 2240 | 71 | 2643 | 113 | 4209 |
| | 72 | 48 | 1946 | 47 | 1902 | 58 | 2339 | 68 | 2760 | 108 | 4406 |
| | 74 | 47 | 1971 | 46 | 1927 | 57 | 2370 | 67 | 2796 | 107 | 4467 |
| 140 | 24 | 79 | 1152 | 78 | 1140 | 96 | 1400 | 112 | 1637 | 175 | 2558 |
| | 36 | 65 | 1420 | 64 | 1396 | 78 | 1717 | 92 | 2017 | 145 | 3176 |
| | 48 | 56 | 1647 | 55 | 1612 | 68 | 1982 | 80 | 2339 | 127 | 3699 |
| | 60 | 53 | 1749 | 49 | 1802 | 61 | 2216 | 72 | 2615 | 114 | 4162 |
| | 66 | 51 | 1843 | 47 | 1890 | 58 | 2324 | 68 | 2742 | 109 | 4376 |
| | 72 | 48 | 1933 | 45 | 1974 | 55 | 2428 | 65 | 2864 | 105 | 4582 |
| | 73 | 46 | 2027 | 45 | 1981 | 55 | 2437 | 65 | 2875 | 104 | 4600 |

NOTE: INTERPOLATE FOR STORM BAR SPANS AND REACTIONS BETWEEN THOSE SHOWN ON THIS SHEET.

## EXTERIOR STORM BAR SPAN SCHEDULE (F) - MULTIPLE SPAN CONDITION (ALL SPANS)

| NEGATIVE DESIGN LOAD (P.S.F.) | SLAT SPAN OR STORM BAR SPACING (IN) | STORM BARS - MAX. LENGTH (INCHES) | | | | | | | | | |
|---|---|---|---|---|---|---|---|---|---|---|---|
| | | STORM BAR TYPE | | | | | | | | | |
| | | (4) 1.5" x 3" | (4) END REACTION (POUNDS) | (6) 2" x 3" | (6) END REACTION (POUNDS) | (8) 2" x 4" | (8) END REACTION (POUNDS) | (11) 2" x 5" | (11) END REACTION (POUNDS) | (15) 2" x 9" | (15) END REACTION (POUNDS) |
| 150 | 24 | 76 | 1194 | 75 | 1180 | 93 | 1451 | 109 | 1696 | 170 | 2654 |
| | 36 | 63 | 1472 | 62 | 1445 | 76 | 1777 | 89 | 2090 | 141 | 3294 |
| | 48 | 55 | 1706 | 53 | 1668 | 66 | 2052 | 77 | 2421 | 123 | 3837 |
| | 54 | 51 | 1810 | 50 | 1769 | 62 | 2176 | 73 | 2568 | 116 | 4083 |
| | 60 | 49 | 1908 | 48 | 1865 | 59 | 2294 | 69 | 2706 | 110 | 4316 |
| | 66 | 47 | 2001 | 46 | 1956 | 56 | 2406 | 66 | 2839 | 106 | 4538 |
| | 71 | 45 | 2080 | 44 | 2033 | 54 | 2501 | 64 | 2951 | 102 | 4727 |
| 160 | 24 | 74 | 1235 | 73 | 1218 | 90 | 1498 | 105 | 1753 | 165 | 2747 |
| | 36 | 61 | 1521 | 60 | 1492 | 73 | 1835 | 86 | 2161 | 136 | 3409 |
| | 48 | 53 | 1763 | 49 | 1723 | 64 | 2119 | 75 | 2500 | 119 | 3970 |
| | 54 | 50 | 1869 | 52 | 1827 | 60 | 2248 | 71 | 2652 | 113 | 4224 |
| | 60 | 47 | 1971 | 46 | 1926 | 57 | 2369 | 67 | 2795 | 107 | 4465 |
| | 66 | 45 | 2067 | 44 | 2020 | 54 | 2485 | 64 | 2932 | 102 | 4695 |
| | 70 | 44 | 2131 | 43 | 2083 | 53 | 2562 | 62 | 3023 | 100 | 4849 |
| 170 | 24 | 72 | 1274 | 71 | 1256 | 87 | 1545 | 102 | 1809 | 160 | 2838 |
| | 36 | 59 | 1570 | 58 | 1538 | 71 | 1892 | 84 | 2229 | 133 | 3520 |
| | 48 | 51 | 1817 | 50 | 1776 | 62 | 2184 | 73 | 2577 | 116 | 4099 |
| | 54 | 48 | 1927 | 47 | 1884 | 58 | 2317 | 69 | 2733 | 109 | 4361 |
| | 60 | 46 | 2031 | 45 | 1985 | 55 | 2442 | 65 | 2881 | 104 | 4610 |
| | 66 | 44 | 2130 | 43 | 2082 | 53 | 2561 | 62 | 3022 | 100 | 4847 |
| | 69 | 43 | 2180 | 42 | 2131 | 51 | 2621 | 61 | 3092 | 97 | 4966 |
| 180 | 24 | 70 | 1312 | 69 | 1292 | 85 | 1589 | 99 | 1863 | 156 | 2925 |
| | 36 | 57 | 1617 | 56 | 1582 | 69 | 1947 | 82 | 2295 | 129 | 3629 |
| | 48 | 50 | 1869 | 49 | 1827 | 60 | 2248 | 71 | 2652 | 113 | 4224 |
| | 54 | 47 | 1983 | 46 | 1938 | 57 | 2384 | 67 | 2813 | 107 | 4495 |
| | 60 | 45 | 2090 | 44 | 2043 | 54 | 2513 | 63 | 2965 | 101 | 4751 |
| | 66 | 43 | 2192 | 42 | 2143 | 51 | 2636 | 60 | 3110 | 97 | 4995 |
| | 68 | 42 | 2227 | 41 | 2177 | 50 | 2678 | 59 | 3159 | 95 | 5079 |
| 190 | 24 | 68 | 1349 | 67 | 1327 | 83 | 1633 | 97 | 1916 | 152 | 3011 |
| | 36 | 56 | 1662 | 55 | 1626 | 67 | 2000 | 79 | 2359 | 126 | 3734 |
| | 48 | 52 | 1797 | 47 | 1877 | 58 | 2309 | 69 | 2724 | 110 | 4346 |
| | 54 | 46 | 2037 | 45 | 1991 | 55 | 2449 | 65 | 2890 | 104 | 4624 |
| | 60 | 43 | 2147 | 42 | 2099 | 52 | 2582 | 62 | 3046 | 99 | 4888 |
| | 66 | 41 | 2252 | 40 | 2201 | 50 | 2708 | 59 | 3195 | 94 | 5139 |
| | 67 | 41 | 2273 | 40 | 2222 | 49 | 2733 | 58 | 3224 | 94 | 5188 |
| 200 | 24 | 66 | 1385 | 65 | 1362 | 80 | 1675 | 94 | 1967 | 149 | 3094 |
| | 36 | 60 | 1554 | 53 | 1668 | 66 | 2052 | 77 | 2421 | 123 | 3837 |
| | 42 | 55 | 1706 | 49 | 1802 | 61 | 2216 | 72 | 2615 | 114 | 4162 |
| | 48 | 51 | 1843 | 46 | 1926 | 57 | 2369 | 67 | 2795 | 107 | 4465 |
| | 54 | 47 | 1971 | 44 | 2043 | 54 | 2513 | 63 | 2965 | 101 | 4751 |
| | 60 | 45 | 2090 | 41 | 2153 | 51 | 2649 | 60 | 3125 | 96 | 5021 |
| | 66 | 40 | 2317 | 39 | 2264 | 48 | 2785 | 57 | 3286 | 92 | 5293 |
| 210 | 24 | 65 | 1420 | 64 | 1396 | 78 | 1717 | 92 | 2017 | 145 | 3176 |
| | 36 | 58 | 1593 | 52 | 1709 | 64 | 2102 | 76 | 2481 | 120 | 3937 |
| | 42 | 53 | 1749 | 48 | 1846 | 59 | 2271 | 70 | 2679 | 112 | 4270 |
| | 48 | 49 | 1889 | 45 | 1974 | 55 | 2428 | 65 | 2864 | 105 | 4582 |
| | 54 | 46 | 2019 | 43 | 2093 | 52 | 2575 | 62 | 3038 | 99 | 4874 |
| | 60 | 44 | 2142 | 40 | 2207 | 50 | 2714 | 59 | 3202 | 94 | 5151 |
| | 65 | 40 | 2345 | 39 | 2292 | 48 | 2819 | 56 | 3326 | 91 | 5361 |
| 220 | 24 | 63 | 1455 | 62 | 1428 | 77 | 1757 | 90 | 2066 | 142 | 3255 |
| | 36 | 57 | 1632 | 51 | 1749 | 63 | 2152 | 74 | 2539 | 117 | 4035 |
| | 42 | 52 | 1790 | 47 | 1890 | 58 | 2324 | 68 | 2742 | 109 | 4376 |
| | 48 | 48 | 1933 | 44 | 2020 | 54 | 2485 | 64 | 2932 | 102 | 4695 |
| | 54 | 45 | 2067 | 42 | 2143 | 51 | 2636 | 60 | 3110 | 97 | 4995 |
| | 60 | 43 | 2192 | 39 | 2259 | 48 | 2778 | 57 | 3278 | 92 | 5279 |
| | 63 | 39 | 2372 | 38 | 2319 | 47 | 2852 | 56 | 3365 | 90 | 5427 |
| 230 | 24 | 62 | 1489 | 61 | 1461 | 75 | 1797 | 88 | 2114 | 139 | 3333 |
| | 30 | 56 | 1670 | 55 | 1633 | 67 | 2009 | 79 | 2370 | 125 | 3751 |
| | 36 | 51 | 1830 | 50 | 1789 | 61 | 2200 | 72 | 2591 | 115 | 4119 |
| | 42 | 47 | 1977 | 46 | 1932 | 57 | 2377 | 67 | 2804 | 107 | 4480 |
| | 48 | 44 | 2113 | 43 | 2066 | 53 | 2541 | 63 | 2998 | 100 | 4806 |
| | 54 | 42 | 2241 | 41 | 2191 | 50 | 2695 | 59 | 3179 | 95 | 5101 |
| | 62 | 39 | 2399 | 38 | 2345 | 47 | 2884 | 55 | 3403 | 89 | 5490 |

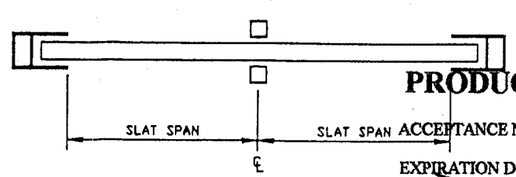


DOUBLE SPAN LAYOUT

PRODUCT RENEWED
ACCEPTANCE No. 98-1214.09
EXPIRATION DATE December 08-01
By Manuel Perez
PRODUCT CONTROL DIVISION
BUILDING CODE COMPLIANCE OFFICE

PRODUCT RENEWED
ACCEPTANCE No. 95-0826.01
EXPIRATION DATE 02/08/2006
By Manuel Perez
PRODUCT CONTROL DIVISION
BUILDING CODE COMPLIANCE OFFICE

APPROVED AS COMPLYING WITH THE SOUTH FLORIDA BUILDING CODE
DATE FEBRUARY 8, 1996
BY Manuel Perez
PRODUCT CONTROL DIVISION
BUILDING CODE COMPLIANCE OFFICE
ACCEPTANCE NO. 95-0908.07


KNEZEVICH & ASSOCIATES, INC.
CONSULTING ENGINEERS & PRODUCT TESTING
641 MOKENA DRIVE
MIAMI SPRINGS, FLORIDA 33166
PHONE (305) 883-9571

COPYRIGHT 1995 KNEZEVICH & ASSOCIATES, INC.

SUPER ROLL-UP SHUTTER

HURST AWNING CO., INC.
5795 N.W. 36TH AVE.
MIAMI, FL. 33142
(305) 635-0900

| revisions | | | |
|---|---|---|---|
| no | date | by | description |
| 1 | 11/30/95 | | COUNTY COMMENTS |

V.J. KNEZEVICH
PROFESSIONAL ENGINEER
Fl. License No. PE 0010983
DEC - 6 1995

| | |
|---|---|
| date 6-12-95 | |
| scale AS NOTED | drawn by J.V. HILL |
| design by V.JK | checked by V.JK |
| drawing no. 95-187 | |
| sheet 6 of 10 | |

## INTERIOR STORM BAR SPAN SCHEDULE (G) - MULTIPLE SPAN CONDITION (ALL SPANS)

STORM BARS - MAX. LENGTH (INCHES) — SEPARATION FROM GLASS = 1"

| POSITIVE DESIGN LOAD (P.S.F.) | SLAT SPAN OR STORM BAR SPACING (IN) | STORM BAR TYPE: (4) 1.5" x 3" | (4) END REACTION (POUNDS) | (5) 2" x 3" | (5) END REACTION (POUNDS) | (7) 2" x 4" | (7) END REACTION (POUNDS) | (10) 2" x 5" | (10) END REACTION (POUNDS) | (14) 2" x 9" | (14) END REACTION (POUNDS) |
|---|---|---|---|---|---|---|---|---|---|---|---|
| 40 | 24 | 113 | 469 | 108 | 449 | 129 | 536 | 148 | 617 | 213 | 889 |
| | 36 | 102 | 636 | 97 | 609 | 116 | 727 | 134 | 836 | 193 | 1205 |
| | 48 | 95 | 789 | 91 | 756 | 108 | 902 | 124 | 1037 | 179 | 1495 |
| | 60 | 90 | 933 | 86 | 893 | 102 | 1066 | 118 | 1226 | 160 | 1672 |
| | 72 | 85 | 1064 | 79 | 989 | 98 | 1220 | 112 | 1406 | 147 | 1831 |
| | 88 | 77 | 1180 | 72 | 1093 | 88 | 1349 | 104 | 1585 | 133 | 2025 |
| 50 | 24 | 107 | 535 | 102 | 531 | 122 | 634 | 140 | 729 | 202 | 1051 |
| | 36 | 96 | 752 | 92 | 720 | 110 | 859 | 126 | 988 | 182 | 1424 |
| | 48 | 90 | 933 | 86 | 893 | 102 | 1066 | 118 | 1226 | 160 | 1672 |
| | 60 | 83 | 1087 | 78 | 1009 | 96 | 1245 | 111 | 1449 | 144 | 1869 |
| | 72 | 76 | 1194 | 71 | 1106 | 87 | 1364 | 103 | 1604 | 131 | 2047 |
| | 88 | 69 | 1324 | 64 | 1222 | 79 | 1508 | 93 | 1778 | 119 | 2264 |
| 60 | 24 | 102 | 636 | 97 | 609 | 116 | 727 | 134 | 836 | 193 | 1205 |
| | 36 | 92 | 862 | 88 | 825 | 105 | 985 | 121 | 1133 | 169 | 1586 |
| | 48 | 85 | 1064 | 79 | 989 | 98 | 1220 | 112 | 1406 | 147 | 1831 |
| | 60 | 76 | 1194 | 71 | 1106 | 87 | 1364 | 103 | 1604 | 131 | 2047 |
| | 72 | 70 | 1312 | 65 | 1211 | 80 | 1494 | 94 | 1762 | 120 | 2243 |
| | 88 | 63 | 1455 | 58 | 1339 | 72 | 1652 | 85 | 1953 | 108 | 2480 |
| 70 | 24 | 98 | 714 | 94 | 684 | 112 | 816 | 129 | 938 | 185 | 1352 |
| | 36 | 89 | 968 | 85 | 925 | 101 | 1106 | 116 | 1272 | 157 | 1713 |
| | 48 | 79 | 1152 | 73 | 1068 | 90 | 1318 | 106 | 1548 | 136 | 1978 |
| | 60 | 71 | 1293 | 66 | 1194 | 81 | 1473 | 95 | 1736 | 121 | 2211 |
| | 72 | 65 | 1420 | 60 | 1308 | 74 | 1614 | 87 | 1907 | 111 | 2423 |
| | 84 | 60 | 1538 | 55 | 1413 | 68 | 1743 | 81 | 2062 | 103 | 2617 |
| | 86 | 59 | 1559 | 55 | 1432 | 67 | 1767 | 80 | 2089 | 101 | 2652 |
| 80 | 24 | 95 | 789 | 91 | 756 | 108 | 902 | 124 | 1037 | 179 | 1495 |
| | 36 | 85 | 1064 | 79 | 989 | 98 | 1220 | 112 | 1406 | 147 | 1831 |
| | 48 | 74 | 1235 | 69 | 1142 | 85 | 1409 | 99 | 1658 | 127 | 2115 |
| | 60 | 66 | 1385 | 61 | 1277 | 76 | 1575 | 89 | 1860 | 113 | 2364 |
| | 72 | 61 | 1521 | 56 | 1399 | 69 | 1725 | 82 | 2040 | 104 | 2590 |
| | 78 | 59 | 1585 | 54 | 1456 | 66 | 1796 | 78 | 2124 | 100 | 2696 |
| | 83 | 57 | 1641 | 52 | 1506 | 64 | 1857 | 76 | 2197 | 96 | 2788 |
| 90 | 24 | 92 | 862 | 88 | 825 | 105 | 985 | 121 | 1133 | 169 | 1586 |
| | 36 | 80 | 1131 | 75 | 1049 | 92 | 1294 | 108 | 1519 | 138 | 1942 |
| | 48 | 70 | 1312 | 65 | 1211 | 80 | 1494 | 94 | 1762 | 120 | 2243 |
| | 60 | 63 | 1472 | 58 | 1354 | 71 | 1670 | 84 | 1976 | 107 | 2508 |
| | 72 | 57 | 1617 | 53 | 1483 | 65 | 1830 | 77 | 2164 | 98 | 2747 |
| | 78 | 55 | 1684 | 51 | 1544 | 63 | 1905 | 74 | 2253 | 94 | 2859 |
| | 81 | 54 | 1717 | 50 | 1574 | 61 | 1941 | 73 | 2296 | 92 | 2914 |
| 100 | 24 | 90 | 933 | 86 | 893 | 102 | 1066 | 118 | 1226 | 160 | 1672 |
| | 36 | 76 | 1194 | 71 | 1106 | 87 | 1364 | 103 | 1604 | 131 | 2047 |
| | 48 | 66 | 1385 | 61 | 1277 | 76 | 1575 | 89 | 1860 | 113 | 2364 |
| | 60 | 60 | 1554 | 55 | 1427 | 68 | 1761 | 80 | 2082 | 102 | 2643 |
| | 66 | 57 | 1632 | 52 | 1497 | 64 | 1847 | 76 | 2184 | 97 | 2772 |
| | 72 | 55 | 1706 | 50 | 1564 | 62 | 1929 | 73 | 2281 | 93 | 2896 |
| | 79 | 52 | 1787 | 48 | 1637 | 59 | 2019 | 70 | 2388 | 89 | 3031 |
| 110 | 24 | 87 | 1002 | 83 | 947 | 100 | 1145 | 115 | 1317 | 153 | 1753 |
| | 36 | 73 | 1254 | 67 | 1160 | 83 | 1430 | 98 | 1685 | 125 | 2147 |
| | 48 | 63 | 1455 | 58 | 1339 | 72 | 1652 | 85 | 1953 | 108 | 2480 |
| | 60 | 57 | 1632 | 52 | 1497 | 64 | 1847 | 76 | 2184 | 97 | 2772 |
| | 66 | 54 | 1714 | 50 | 1570 | 61 | 1937 | 73 | 2291 | 92 | 2908 |
| | 72 | 52 | 1790 | 48 | 1640 | 59 | 2023 | 70 | 2393 | 88 | 3037 |
| | 77 | 50 | 1852 | 46 | 1697 | 57 | 2093 | 67 | 2475 | 85 | 3142 |

## INTERIOR STORM BAR SPAN SCHEDULE (G) - MULTIPLE SPAN CONDITION (ALL SPANS)

STORM BARS - MAX. LENGTH (INCHES) — SEPARATION FROM GLASS = 1/2"

| POSITIVE DESIGN LOAD (P.S.F.) | SLAT SPAN OR STORM BAR SPACING (IN) | STORM BAR TYPE: (4) 1" x 2" | (4) END REACTION (POUNDS) | (4) 1.5" x 3" | (4) END REACTION (POUNDS) | (22) 2" x 2" | (22) END REACTION (POUNDS) | (5) 2" x 3" | (5) END REACTION (POUNDS) | (7) 2" x 4" | (7) END REACTION (POUNDS) | (10) 2" x 5" | (10) END REACTION (POUNDS) | (14) 2" x 9" | (14) END REACTION (POUNDS) |
|---|---|---|---|---|---|---|---|---|---|---|---|---|---|---|---|
| 40 | 24 | 67 | 279 | 95 | 395 | 71 | 296 | 91 | 378 | 108 | 451 | 124 | 519 | 179 | 747 |
| | 36 | 61 | 378 | 86 | 535 | 64 | 401 | 82 | 512 | 98 | 611 | 112 | 703 | 162 | 1013 |
| | 48 | 56 | 470 | 80 | 664 | 60 | 498 | 76 | 635 | 91 | 758 | 105 | 872 | 151 | 1257 |
| | 60 | 53 | 555 | 75 | 785 | 56 | 588 | 72 | 751 | 86 | 896 | 99 | 1031 | 143 | 1486 |
| | 72 | 51 | 637 | 72 | 900 | 54 | 674 | 69 | 861 | 82 | 1028 | 95 | 1182 | 136 | 1704 |
| | 88 | 47 | 723 | 68 | 1046 | 51 | 784 | 66 | 1001 | 78 | 1195 | 90 | 1374 | 130 | 1980 |
| | 99 | 45 | 770 | 66 | 1144 | 50 | 858 | 64 | 1095 | 76 | 1307 | 87 | 1503 | 125 | 2150 |
| 50 | 24 | 63 | 330 | 90 | 467 | 67 | 350 | 86 | 447 | 102 | 533 | 119 | 613 | 170 | 883 |
| | 36 | 57 | 447 | 81 | 632 | 61 | 474 | 72 | 605 | 92 | 722 | 106 | 831 | 153 | 1197 |
| | 48 | 53 | 555 | 75 | 785 | 56 | 588 | 77 | 751 | 86 | 896 | 99 | 1031 | 143 | 1486 |
| | 60 | 50 | 656 | 71 | 928 | 53 | 695 | 68 | 888 | 81 | 1060 | 94 | 1219 | 135 | 1756 |
| | 72 | 47 | 732 | 68 | 1064 | 51 | 797 | 65 | 1018 | 78 | 1215 | 89 | 1397 | 129 | 2014 |
| | 88 | 42 | 811 | 65 | 1236 | 48 | 918 | 62 | 1184 | 74 | 1412 | 85 | 1624 | 119 | 2264 |
| | 94 | 41 | 839 | 64 | 1297 | 47 | 948 | 61 | 1242 | 73 | 1482 | 84 | 1704 | 115 | 2338 |
| 60 | 24 | 61 | 378 | 86 | 535 | 64 | 401 | 82 | 512 | 98 | 611 | 112 | 703 | 162 | 1013 |
| | 36 | 55 | 513 | 77 | 725 | 58 | 544 | 74 | 694 | 88 | 828 | 102 | 953 | 146 | 1373 |
| | 48 | 51 | 637 | 72 | 900 | 54 | 674 | 69 | 861 | 82 | 1028 | 95 | 1182 | 136 | 1704 |
| | 60 | 47 | 732 | 68 | 1064 | 51 | 797 | 65 | 1018 | 78 | 1215 | 89 | 1397 | 129 | 2014 |
| | 72 | 43 | 804 | 65 | 1219 | 49 | 910 | 62 | 1167 | 74 | 1393 | 85 | 1602 | 120 | 2243 |
| | 88 | 39 | 891 | 62 | 1418 | 44 | 1006 | 58 | 1339 | 71 | 1619 | 81 | 1862 | 108 | 2480 |
| | 90 | 39 | 900 | 62 | 1438 | 43 | 1015 | 58 | 1352 | 70 | 1642 | 81 | 1899 | 107 | 2503 |
| 70 | 24 | 58 | 425 | 82 | 601 | 62 | 450 | 79 | 575 | 94 | 686 | 108 | 789 | 156 | 1137 |
| | 36 | 53 | 576 | 74 | 814 | 56 | 610 | 71 | 779 | 85 | 930 | 98 | 1069 | 141 | 1541 |
| | 48 | 48 | 706 | 69 | 1010 | 52 | 757 | 66 | 967 | 79 | 1154 | 91 | 1327 | 131 | 1912 |
| | 60 | 43 | 792 | 65 | 1194 | 49 | 895 | 63 | 1143 | 75 | 1364 | 86 | 1569 | 121 | 2211 |
| | 72 | 40 | 870 | 63 | 1369 | 45 | 983 | 60 | 1308 | 71 | 1564 | 82 | 1798 | 111 | 2423 |
| | 84 | 37 | 942 | 60 | 1537 | 42 | 1061 | 55 | 1413 | 68 | 1743 | 79 | 2019 | 103 | 2617 |
| | 86 | 36 | 956 | 59 | 1559 | 41 | 1076 | 55 | 1432 | 67 | 1767 | 79 | 2060 | 101 | 2652 |
| 80 | 24 | 56 | 470 | 80 | 664 | 60 | 498 | 76 | 635 | 91 | 758 | 105 | 872 | 151 | 1257 |
| | 36 | 51 | 637 | 72 | 900 | 54 | 674 | 69 | 861 | 82 | 1028 | 95 | 1182 | 136 | 1704 |
| | 48 | 45 | 756 | 67 | 1116 | 50 | 837 | 64 | 1069 | 77 | 1275 | 88 | 1467 | 127 | 2114 |
| | 60 | 41 | 849 | 63 | 1320 | 46 | 959 | 61 | 1263 | 72 | 1508 | 83 | 1734 | 113 | 2364 |
| | 72 | 37 | 932 | 61 | 1513 | 42 | 1050 | 56 | 1399 | 69 | 1725 | 80 | 1988 | 104 | 2590 |
| | 78 | 36 | 971 | 59 | 1585 | 40 | 1093 | 54 | 1456 | 66 | 1796 | 78 | 2111 | 100 | 2696 |
| | 83 | 35 | 1006 | 57 | 1641 | 39 | 1131 | 52 | 1506 | 64 | 1857 | 76 | 2197 | 96 | 2788 |
| 90 | 24 | 55 | 513 | 77 | 725 | 58 | 544 | 74 | 694 | 88 | 828 | 102 | 953 | 146 | 1373 |
| | 36 | 49 | 693 | 70 | 983 | 52 | 737 | 67 | 941 | 80 | 1123 | 92 | 1291 | 132 | 1861 |
| | 48 | 43 | 804 | 65 | 1219 | 49 | 910 | 62 | 1167 | 74 | 1393 | 85 | 1602 | 120 | 2243 |
| | 60 | 38 | 902 | 62 | 1442 | 43 | 1017 | 58 | 1354 | 70 | 1647 | 81 | 1894 | 107 | 2508 |
| | 72 | 35 | 991 | 57 | 1617 | 40 | 1114 | 53 | 1483 | 65 | 1830 | 77 | 2164 | 98 | 2747 |
| | 78 | 34 | 1032 | 55 | 1684 | 38 | 1160 | 51 | 1544 | 63 | 1905 | 74 | 2253 | 94 | 2859 |
| | 81 | 33 | 1053 | 54 | 1717 | 37 | 1182 | 50 | 1574 | 61 | 1941 | 73 | 2296 | 92 | 2914 |
| 100 | 24 | 53 | 555 | 75 | 785 | 56 | 588 | 72 | 751 | 86 | 896 | 99 | 1031 | 143 | 1486 |
| | 36 | 47 | 732 | 68 | 1064 | 51 | 797 | 65 | 1018 | 78 | 1215 | 89 | 1397 | 129 | 2014 |
| | 48 | 41 | 849 | 63 | 1320 | 46 | 959 | 61 | 1263 | 72 | 1508 | 83 | 1734 | 113 | 2364 |
| | 60 | 37 | 952 | 60 | 1554 | 41 | 1072 | 55 | 1427 | 68 | 1761 | 79 | 2050 | 102 | 2643 |
| | 66 | 35 | 1000 | 57 | 1632 | 39 | 1124 | 52 | 1497 | 64 | 1847 | 76 | 2184 | 97 | 2772 |
| | 72 | 33 | 1046 | 55 | 1706 | 38 | 1174 | 50 | 1564 | 62 | 1929 | 73 | 2281 | 93 | 2896 |
| | 79 | 32 | 1095 | 52 | 1787 | 36 | 1230 | 48 | 1637 | 59 | 2019 | 70 | 2388 | 89 | 3031 |
| 110 | 24 | 52 | 596 | 74 | 843 | 55 | 632 | 70 | 807 | 84 | 963 | 97 | 1107 | 139 | 1596 |
| | 36 | 45 | 769 | 66 | 1142 | 50 | 856 | 64 | 1094 | 76 | 1305 | 87 | 1501 | 125 | 2147 |
| | 48 | 39 | 891 | 62 | 1418 | 44 | 1006 | 58 | 1339 | 71 | 1619 | 81 | 1862 | 108 | 2480 |
| | 60 | 35 | 1000 | 57 | 1632 | 39 | 1124 | 52 | 1497 | 64 | 1847 | 76 | 2184 | 97 | 2772 |
| | 66 | 33 | 1050 | 54 | 1714 | 37 | 1179 | 50 | 1570 | 61 | 1937 | 73 | 2291 | 92 | 2908 |
| | 72 | 32 | 1097 | 52 | 1790 | 36 | 1232 | 48 | 1640 | 59 | 2023 | 70 | 2393 | 88 | 3037 |
| | 77 | 31 | 1135 | 50 | 1852 | 35 | 1274 | 46 | 1697 | 57 | 2093 | 67 | 2475 | 85 | 3142 |

NOTE: INTERPOLATE FOR STORM BAR SPANS AND REACTIONS BETWEEN THOSE SHOWN ON THIS SHEET.

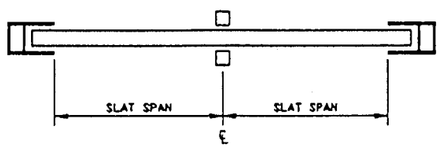


DOUBLE SPAN LAYOUT

**PRODUCT RENEWED**

ACCEPTANCE No. 98-1214-09

EXPIRATION DATE December 8-01

By Manuel Perez

PRODUCT CONTROL DIVISION
BUILDING CODE COMPLIANCE OFFICE

**PRODUCT RENEWED**

ACCEPTANCE No. 01-0126.01

EXPIRATION DATE 02/08/2006

By Manuel Perez

PRODUCT CONTROL DIVISION
BUILDING CODE COMPLIANCE OFFICE

APPROVED AS COMPLYING WITH THE SOUTH FLORIDA BUILDING CODE

DATE FEBRUARY 8, 1996

BY Manuel Perez

PRODUCT CONTROL DIVISION

BUILDING CODE COMPLIANCE OFFICE

ACCEPTANCE NO 95-0908.07


KNEZEVICH & ASSOCIATES, INC.
CONSULTING ENGINEERS & PRODUCT TESTING
641 MORENA DRIVE
MIAMI SPRINGS, FLORIDA 33166
PHONE (305) 883-9571



COPYRIGHT 1995 KNEZEVICH & ASSOCIATES, INC.


SUPER ROLL-UP SHUTTER

HURST AWNING CO., INC.
5795 N.W. 36TH AVE.
MIAMI, FL. 33142
(305) 635-0900

| revisions | | | |
|---|---|---|---|
| no | date | by | description |
| 1 | 11/30/95 | | COUNTY COMMENTS |

V.J. KNEZEVICH
PROFESSIONAL ENGINEER
Fl. License No.
PE 0010983

DEC 26 1995

| | |
|---|---|
| date 6-12-95 | |
| scale AS NOTED | drawn by J.V. HILL |
| design by VJK | checked by VJK |
| drawing no. 95-187 | |

## PERMANENT MULLION SPAN SCHEDUL (H)

| NEGATIVE DESIGN LOAD (P.S.F.) | SLAT SPAN (IN) | MULLION - MAX. LENGTH (INCHES) | | | | | | | | | | | |
|---|---|---|---|---|---|---|---|---|---|---|---|---|---|
| | | MULLION TYPE | | | | | | | | | | | |
| | | (4) 1.5" x 3" | (4) END REACTION (POUNDS) | (5) 2" x 3" | (5) END REACTION (POUNDS) | (7) 2" x 4" | (7) END REACTION (POUNDS) | (9) 2" x 4" (HEAVY) | (9) END REACTION (POUNDS) | (10) 2" x 5" | (10) END REACTION (POUNDS) | (14) 2" x 9" | (14) END REACTION (POUNDS) |
| 40 | 44 | 90 | 581 | 76 | 548 | 96 | 693 | 116 | 841 | 115 | 835 | 188 | 1360 |
| | 50 | 77 | 624 | 73 | 589 | 92 | 746 | 112 | 904 | 111 | 898 | 181 | 1462 |
| | 56 | 75 | 667 | 71 | 629 | 89 | 796 | 108 | 965 | 108 | 959 | 174 | 1546 |
| | 62 | 73 | 707 | 68 | 667 | 87 | 845 | 105 | 1025 | 104 | 1018 | 166 | 1617 |
| | 68 | 71 | 747 | 67 | 705 | 84 | 892 | 102 | 1082 | 102 | 1075 | 159 | 1685 |
| | 74 | 69 | 786 | 65 | 741 | 82 | 939 | 100 | 1138 | 99 | 1131 | 153 | 1750 |
| | 88 | 65 | 873 | 62 | 825 | 78 | 1045 | 95 | 1267 | 94 | 1259 | 141 | 1896 |
| 50 | 39 | 77 | 636 | 72 | 600 | 91 | 739 | 111 | 921 | 110 | 915 | 179 | 1490 |
| | 45 | 74 | 688 | 69 | 649 | 88 | 822 | 107 | 996 | 106 | 990 | 169 | 1584 |
| | 51 | 71 | 738 | 67 | 696 | 85 | 882 | 103 | 1069 | 102 | 1062 | 161 | 1670 |
| | 57 | 69 | 787 | 65 | 742 | 82 | 940 | 100 | 1139 | 99 | 1132 | 153 | 1751 |
| | 63 | 67 | 834 | 63 | 787 | 80 | 996 | 97 | 1208 | 96 | 1200 | 147 | 1829 |
| | 69 | 65 | 880 | 61 | 830 | 78 | 1051 | 94 | 1274 | 94 | 1266 | 141 | 1904 |
| | 83 | 62 | 980 | 58 | 924 | 74 | 1170 | 89 | 1419 | 89 | 1410 | 130 | 2064 |
| 60 | 36 | 74 | 684 | 70 | 645 | 88 | 817 | 107 | 991 | 106 | 984 | 170 | 1577 |
| | 42 | 71 | 744 | 67 | 702 | 85 | 889 | 102 | 1078 | 102 | 1071 | 160 | 1680 |
| | 48 | 68 | 802 | 64 | 757 | 81 | 958 | 99 | 1162 | 98 | 1154 | 151 | 1777 |
| | 54 | 66 | 858 | 62 | 809 | 79 | 1025 | 95 | 1243 | 95 | 1235 | 144 | 1869 |
| | 60 | 64 | 912 | 60 | 861 | 76 | 1089 | 93 | 1321 | 92 | 1312 | 137 | 1957 |
| | 66 | 62 | 965 | 59 | 910 | 74 | 1152 | 90 | 1397 | 89 | 1388 | 131 | 2040 |
| | 78 | 59 | 1066 | 56 | 1005 | 71 | 1273 | 86 | 1453 | 85 | 1533 | 122 | 2199 |
| 70 | 33 | 72 | 727 | 68 | 686 | 86 | 868 | 104 | 1053 | 103 | 1046 | 163 | 1650 |
| | 39 | 68 | 795 | 65 | 750 | 82 | 949 | 99 | 1151 | 99 | 1144 | 152 | 1763 |
| | 45 | 66 | 860 | 62 | 812 | 79 | 1027 | 95 | 1246 | 95 | 1238 | 143 | 1872 |
| | 51 | 64 | 923 | 60 | 871 | 76 | 1102 | 92 | 1337 | 91 | 1328 | 136 | 1974 |
| | 57 | 62 | 984 | 58 | 928 | 74 | 1175 | 89 | 1425 | 89 | 1416 | 130 | 2071 |
| | 63 | 60 | 1043 | 56 | 984 | 71 | 1245 | 87 | 1510 | 86 | 1500 | 124 | 2163 |
| | 74 | 52 | 1144 | 54 | 1080 | 68 | 1367 | 83 | 1657 | 82 | 1647 | 116 | 2319 |
| 80 | 31 | 70 | 766 | 66 | 722 | 83 | 914 | 101 | 1109 | 100 | 1101 | 156 | 1716 |
| | 37 | 67 | 841 | 63 | 794 | 79 | 1005 | 96 | 1218 | 96 | 1210 | 146 | 1841 |
| | 43 | 64 | 914 | 60 | 862 | 76 | 1091 | 93 | 1323 | 92 | 1315 | 137 | 1959 |
| | 49 | 62 | 983 | 58 | 928 | 74 | 1174 | 89 | 1424 | 89 | 1415 | 130 | 2070 |
| | 55 | 60 | 1051 | 56 | 991 | 71 | 1255 | 86 | 1521 | 86 | 1512 | 123 | 2175 |
| | 61 | 58 | 1116 | 55 | 1053 | 69 | 1332 | 84 | 1616 | 83 | 1605 | 118 | 2276 |
| | 71 | 55 | 1220 | 52 | 1151 | 66 | 1458 | 80 | 1767 | 80 | 1756 | 110 | 2436 |
| 90 | 29 | 68 | 801 | 64 | 755 | 81 | 956 | 99 | 1160 | 98 | 1152 | 151 | 1774 |
| | 35 | 65 | 884 | 61 | 834 | 78 | 1056 | 94 | 1280 | 93 | 1272 | 140 | 1911 |
| | 41 | 62 | 963 | 59 | 909 | 74 | 1150 | 90 | 1395 | 90 | 1386 | 132 | 2038 |
| | 47 | 60 | 1040 | 56 | 981 | 72 | 1241 | 87 | 1505 | 86 | 1496 | 124 | 2158 |
| | 53 | 58 | 1113 | 55 | 1050 | 69 | 1329 | 84 | 1612 | 83 | 1601 | 118 | 2272 |
| | 59 | 56 | 1184 | 53 | 1117 | 67 | 1414 | 81 | 1715 | 81 | 1704 | 113 | 2380 |
| | 68 | 54 | 1287 | 51 | 1214 | 64 | 1537 | 78 | 1863 | 77 | 1851 | 106 | 2533 |
| 100 | 27 | 67 | 833 | 63 | 786 | 80 | 995 | 97 | 1206 | 96 | 1198 | 147 | 1828 |
| | 33 | 64 | 923 | 60 | 871 | 76 | 1103 | 92 | 1337 | 91 | 1329 | 136 | 1975 |
| | 39 | 61 | 1010 | 57 | 953 | 73 | 1206 | 88 | 1462 | 87 | 1453 | 127 | 2111 |
| | 45 | 58 | 1092 | 55 | 1031 | 70 | 1305 | 85 | 1582 | 84 | 1572 | 120 | 2240 |
| | 51 | 56 | 1172 | 53 | 1106 | 67 | 1400 | 82 | 1697 | 81 | 1686 | 114 | 2361 |
| | 57 | 55 | 1249 | 52 | 1178 | 65 | 1492 | 79 | 1809 | 79 | 1797 | 108 | 2477 |
| | 66 | 53 | 1324 | 50 | 1249 | 63 | 1581 | 77 | 1917 | 76 | 1905 | 104 | 2587 |
| 110 | 38 | 59 | 1053 | 56 | 994 | 71 | 1258 | 86 | 1526 | 86 | 1516 | 123 | 2180 |
| | 42 | 58 | 1113 | 55 | 1050 | 69 | 1329 | 84 | 1612 | 83 | 1602 | 118 | 2272 |
| | 46 | 56 | 1171 | 53 | 1105 | 67 | 1399 | 82 | 1696 | 81 | 1685 | 114 | 2360 |
| | 50 | 55 | 1228 | 52 | 1159 | 66 | 1467 | 80 | 1779 | 79 | 1767 | 110 | 2446 |
| | 54 | 54 | 1284 | 51 | 1211 | 64 | 1533 | 78 | 1859 | 78 | 1847 | 106 | 2528 |
| | 58 | 53 | 1338 | 50 | 1262 | 63 | 1598 | 76 | 1938 | 76 | 1925 | 103 | 2608 |
| | 62 | 52 | 1391 | 49 | 1312 | 62 | 1661 | 75 | 2015 | 74 | 2002 | 100 | 2685 |
| 120 | 37 | 58 | 1095 | 55 | 1033 | 70 | 1308 | 85 | 1586 | 84 | 1575 | 120 | 2244 |
| | 41 | 57 | 1159 | 54 | 1093 | 68 | 1384 | 82 | 1678 | 82 | 1667 | 115 | 2341 |
| | 45 | 55 | 1221 | 52 | 1152 | 66 | 1458 | 80 | 1768 | 79 | 1757 | 110 | 2435 |
| | 49 | 54 | 1282 | 51 | 1209 | 64 | 1531 | 78 | 1856 | 78 | 1844 | 106 | 2525 |
| | 53 | 53 | 1341 | 50 | 1265 | 63 | 1601 | 76 | 1942 | 76 | 1929 | 103 | 2612 |
| | 57 | 52 | 1399 | 49 | 1320 | 62 | 1671 | 75 | 2026 | 74 | 2013 | 100 | 2696 |
| | 61 | 51 | 1456 | 48 | 1373 | 60 | 1738 | 73 | 2108 | 73 | 2094 | 97 | 2778 |
| 130 | 35 | 57 | 1134 | 54 | 1070 | 68 | 1355 | 83 | 1643 | 82 | 1632 | 116 | 2304 |
| | 39 | 56 | 1202 | 53 | 1134 | 66 | 1436 | 81 | 1741 | 80 | 1730 | 111 | 2407 |
| | 43 | 54 | 1268 | 51 | 1197 | 65 | 1515 | 79 | 1837 | 78 | 1825 | 107 | 2505 |
| | 47 | 53 | 1333 | 50 | 1257 | 63 | 1592 | 77 | 1930 | 76 | 1918 | 103 | 2600 |
| | 51 | 52 | 1396 | 49 | 1317 | 62 | 1667 | 75 | 2021 | 74 | 2008 | 100 | 2692 |
| | 55 | 51 | 1457 | 48 | 1375 | 60 | 1740 | 73 | 2111 | 73 | 2097 | 96 | 2780 |
| | 59 | 50 | 1518 | 47 | 1432 | 59 | 1812 | 72 | 2198 | 71 | 2183 | 94 | 2866 |
| 140 | 34 | 56 | 1172 | 53 | 1106 | 67 | 1400 | 82 | 1697 | 81 | 1686 | 114 | 2361 |
| | 38 | 55 | 1244 | 52 | 1174 | 65 | 1486 | 79 | 1801 | 79 | 1790 | 109 | 2469 |
| | 42 | 53 | 1314 | 50 | 1240 | 64 | 1569 | 77 | 1903 | 77 | 1890 | 104 | 2573 |
| | 46 | 52 | 1382 | 49 | 1304 | 62 | 1651 | 75 | 2002 | 75 | 1989 | 100 | 2672 |
| | 50 | 51 | 1449 | 48 | 1367 | 61 | 1730 | 73 | 2098 | 73 | 2084 | 97 | 2768 |
| | 54 | 50 | 1514 | 47 | 1428 | 59 | 1808 | 72 | 2192 | 71 | 2178 | 94 | 2861 |
| | 58 | 49 | 1577 | 46 | 1488 | 58 | 1884 | 70 | 2284 | 70 | 2269 | 91 | 2950 |

NOTE: INTERPOLATE FOR MULLION SPANS AND REACTIONS BETWEEN THOSE SHOWN ON THIS SHEET.

PRODUCT RENEWED
ACCEPTANCE No. 01-0126.01
EXPIRATION DATE 02/08/2006
By Manuel Perez
PRODUCT CONTROL DIVISION
BUILDING CODE COMPLIANCE OFFICE

APPROVED AS COMPLYING WITH THE SOUTH FLORIDA BUILDING CODE
DATE FEBRUARY 8, 1996
BY Manuel Perez
PRODUCT CONTROL DIVISION
BUILDING CODE COMPLIANCE OFFICE
ACCEPTANCE NO. 95-0908.07

## PERMANENT MULLION SPAN SCHEDULE (H)

| NEGATIVE DESIGN LOAD (P.S.F.) | SLAT SPAN (IN) | MULLION - MAX. LENGTH (INCHES) | | | | | | | | | | | |
|---|---|---|---|---|---|---|---|---|---|---|---|---|---|
| | | MULLION TYPE | | | | | | | | | | | |
| | | (4) 1.5" x 3" | (4) END REACTION (POUNDS) | (5) 2" x 3" | (5) END REACTION (POUNDS) | (7) 2" x 4" | (7) END REACTION (POUNDS) | (9) 2" x 4" (HEAVY) | (9) END REACTION (POUNDS) | (10) 2" x 5" | (10) END REACTION (POUNDS) | (14) 2" x 9" | (14) END REACTION (POUNDS) |
| 150 | 33 | 56 | 1208 | 52 | 1140 | 66 | 1443 | 80 | 1749 | 80 | 1738 | 111 | 2415 |
| | 37 | 54 | 1284 | 51 | 1211 | 64 | 1533 | 78 | 1859 | 78 | 1847 | 106 | 2528 |
| | 41 | 52 | 1358 | 49 | 1281 | 63 | 1621 | 76 | 1966 | 75 | 1953 | 102 | 2637 |
| | 45 | 51 | 1430 | 48 | 1349 | 61 | 1707 | 74 | 2070 | 73 | 2057 | 98 | 2741 |
| | 49 | 50 | 1500 | 47 | 1415 | 60 | 1791 | 72 | 2172 | 72 | 2158 | 94 | 2841 |
| | 53 | 49 | 1568 | 46 | 1479 | 58 | 1873 | 71 | 2271 | 70 | 2256 | 91 | 2937 |
| | 57 | 48 | 1635 | 45 | 1543 | 57 | 1953 | 69 | 2368 | 69 | 2353 | 89 | 3031 |
| 160 | 32 | 55 | 1243 | 52 | 1172 | 65 | 1484 | 79 | 1799 | 79 | 1788 | 109 | 2467 |
| | 36 | 53 | 1322 | 50 | 1248 | 63 | 1579 | 77 | 1915 | 76 | 1903 | 104 | 2583 |
| | 40 | 52 | 1400 | 49 | 1321 | 62 | 1672 | 75 | 2027 | 74 | 2014 | 99 | 2698 |
| | 44 | 50 | 1475 | 47 | 1392 | 60 | 1762 | 73 | 2137 | 72 | 2123 | 96 | 2806 |
| | 48 | 49 | 1549 | 46 | 1461 | 59 | 1850 | 71 | 2243 | 71 | 2229 | 92 | 2911 |
| | 52 | 48 | 1621 | 45 | 1529 | 57 | 1936 | 69 | 2347 | 69 | 2332 | 89 | 3011 |
| | 56 | 47 | 1691 | 44 | 1595 | 56 | 2020 | 68 | 2449 | 68 | 2433 | 86 | 3109 |
| 170 | 31 | 54 | 1276 | 51 | 1204 | 65 | 1524 | 78 | 1848 | 78 | 1836 | 107 | 2516 |
| | 35 | 52 | 1360 | 49 | 1283 | 63 | 1624 | 76 | 1969 | 75 | 1956 | 102 | 2639 |
| | 39 | 51 | 1441 | 48 | 1359 | 61 | 1721 | 74 | 2087 | 73 | 2073 | 97 | 2757 |
| | 43 | 50 | 1520 | 47 | 1434 | 59 | 1815 | 72 | 2201 | 71 | 2187 | 94 | 2869 |
| | 47 | 48 | 1597 | 46 | 1506 | 58 | 1907 | 70 | 2312 | 70 | 2297 | 90 | 2978 |
| | 51 | 47 | 1672 | 45 | 1577 | 56 | 1997 | 68 | 2421 | 68 | 2406 | 87 | 3082 |
| | 55 | 46 | 1745 | 44 | 1647 | 55 | 2085 | 67 | 2528 | 66 | 2508 | 84 | 3183 |
| 180 | 31 | 53 | 1304 | 50 | 1230 | 64 | 1557 | 77 | 1888 | 77 | 1875 | 105 | 2537 |
| | 35 | 52 | 1391 | 49 | 1312 | 62 | 1661 | 75 | 2015 | 74 | 2002 | 100 | 2685 |
| | 39 | 50 | 1476 | 47 | 1393 | 60 | 1763 | 73 | 2138 | 72 | 2124 | 96 | 2807 |
| | 43 | 49 | 1559 | 46 | 1471 | 58 | 1862 | 71 | 2257 | 70 | 2243 | 92 | 2924 |
| | 47 | 48 | 1639 | 45 | 1546 | 57 | 1958 | 69 | 2374 | 69 | 2359 | 88 | 3037 |
| | 51 | 47 | 1718 | 44 | 1621 | 56 | 2052 | 67 | 2488 | 67 | 2472 | 85 | 3145 |
| | 55 | 46 | 1795 | 43 | 1693 | 54 | 2143 | 66 | 2599 | 65 | 2561 | 83 | 3250 |
| 190 | 30 | 53 | 1329 | 50 | 1254 | 63 | 1587 | 77 | 1924 | 76 | 1912 | 103 | 2594 |
| | 34 | 51 | 1420 | 48 | 1340 | 61 | 1696 | 74 | 2057 | 74 | 2044 | 98 | 2727 |
| | 38 | 50 | 1509 | 47 | 1424 | 59 | 1802 | 72 | 2186 | 72 | 2171 | 94 | 2854 |
| | 42 | 48 | 1595 | 46 | 1505 | 58 | 1905 | 70 | 2310 | 70 | 2295 | 90 | 2976 |
| | 46 | 47 | 1679 | 44 | 1584 | 56 | 2006 | 68 | 2432 | 68 | 2416 | 87 | 3092 |
| | 50 | 46 | 1761 | 43 | 1662 | 55 | 2103 | 67 | 2551 | 66 | 2525 | 84 | 3205 |
| | 54 | 45 | 1841 | 42 | 1737 | 54 | 2199 | 65 | 2667 | 64 | 2611 | 81 | 3313 |
| 200 | 29 | 52 | 1353 | 50 | 1276 | 63 | 1616 | 76 | 1960 | 76 | 1947 | 102 | 2630 |
| | 33 | 51 | 1449 | 48 | 1367 | 61 | 1730 | 73 | 2098 | 73 | 2084 | 97 | 2768 |
| | 37 | 49 | 1541 | 46 | 1454 | 59 | 1840 | 71 | 2232 | 71 | 2217 | 93 | 2899 |
| | 41 | 48 | 1631 | 45 | 1539 | 57 | 1948 | 69 | 2362 | 69 | 2346 | 89 | 3025 |
| | 45 | 47 | 1718 | 44 | 1621 | 56 | 2052 | 67 | 2488 | 67 | 2472 | 85 | 3146 |
| | 49 | 45 | 1803 | 43 | 1701 | 54 | 2154 | 66 | 2612 | 65 | 2570 | 82 | 3262 |
| | 53 | 44 | 1887 | 42 | 1780 | 53 | 2248 | 64 | 2732 | 63 | 2659 | 80 | 3375 |
| 210 | 34 | 49 | 1524 | 47 | 1438 | 59 | 1820 | 72 | 2207 | 71 | 2193 | 93 | 2876 |
| | 37 | 48 | 1596 | 46 | 1505 | 58 | 1906 | 70 | 2311 | 70 | 2296 | 90 | 2976 |
| | 40 | 47 | 1665 | 45 | 1571 | 57 | 1989 | 69 | 2412 | 68 | 2396 | 87 | 3073 |
| | 43 | 46 | 1734 | 44 | 1635 | 55 | 2070 | 67 | 2511 | 67 | 2494 | 85 | 3167 |
| | 46 | 46 | 1801 | 43 | 1699 | 54 | 2150 | 66 | 2608 | 65 | 2567 | 82 | 3258 |
| | 49 | 45 | 1866 | 42 | 1761 | 53 | 2229 | 65 | 2703 | 63 | 2637 | 80 | 3347 |
| | 52 | 44 | 1931 | 41 | 1822 | 52 | 2287 | 64 | 2796 | 62 | 2705 | 78 | 3434 |
| 220 | 33 | 49 | 1533 | 46 | 1465 | 59 | 1854 | 71 | 2248 | 71 | 2234 | 92 | 2916 |
| | 36 | 48 | 1626 | 45 | 1534 | 57 | 1942 | 69 | 2355 | 69 | 2340 | 89 | 3019 |
| | 39 | 47 | 1699 | 44 | 1603 | 56 | 2029 | 68 | 2460 | 67 | 2444 | 86 | 3119 |
| | 42 | 46 | 1770 | 43 | 1669 | 55 | 2113 | 66 | 2563 | 66 | 2534 | 83 | 3216 |
| | 45 | 45 | 1839 | 42 | 1735 | 54 | 2196 | 65 | 2663 | 64 | 2608 | 81 | 3311 |
| | 48 | 44 | 1907 | 42 | 1799 | 53 | 2266 | 64 | 2762 | 62 | 2680 | 79 | 3402 |
| | 51 | 43 | 1974 | 41 | 1862 | 51 | 2326 | 63 | 2859 | 61 | 2751 | 77 | 3491 |
| 230 | 32 | 49 | 1580 | 46 | 1490 | 58 | 1887 | 70 | 2288 | 70 | 2273 | 91 | 2954 |
| | 35 | 47 | 1657 | 45 | 1563 | 57 | 1978 | 69 | 2399 | 68 | 2383 | 88 | 3061 |
| | 38 | 46 | 1731 | 44 | 1633 | 55 | 2068 | 67 | 2507 | 67 | 2491 | 85 | 3164 |
| | 41 | 45 | 1805 | 43 | 1703 | 54 | 2155 | 66 | 2614 | 65 | 2572 | 82 | 3264 |
| | 44 | 45 | 1877 | 42 | 1770 | 53 | 2239 | 65 | 2718 | 63 | 2648 | 80 | 3361 |
| | 47 | 44 | 1947 | 41 | 1837 | 52 | 2302 | 63 | 2820 | 61 | 2722 | 78 | 3455 |
| | 50 | 43 | 2016 | 41 | 1902 | 50 | 2363 | 62 | 2920 | 60 | 2795 | 76 | 3547 |

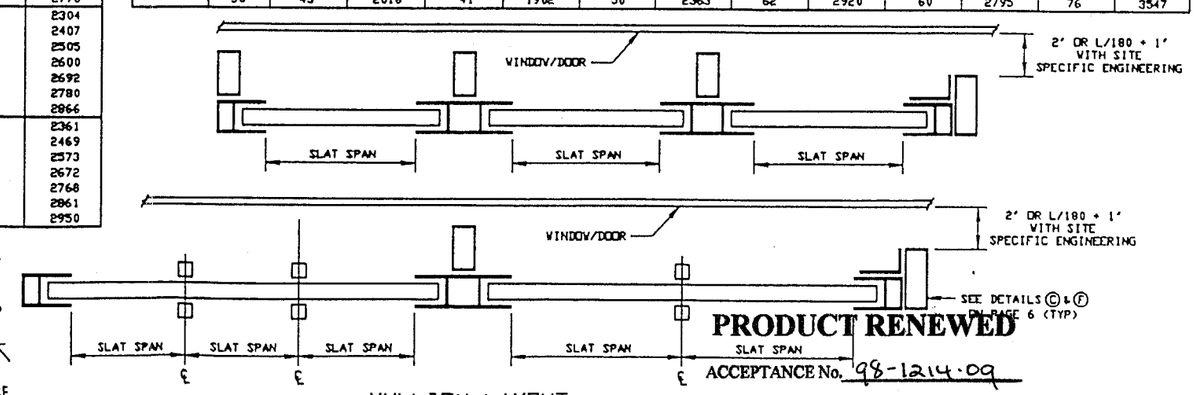


MULLION LAYOUT

PRODUCT RENEWED
ACCEPTANCE No. 98-1214.09
EXPIRATION DATE December 08-01
By Manuel Perez
PRODUCT CONTROL DIVISION
BUILDING CODE COMPLIANCE OFFICE


KNEZEVICH & ASSOCIATES, INC.
CONSULTING ENGINEERS & PRODUCT TESTING
641 MOKENA DRIVE
MIAMI SPRINGS, FLORIDA 33166
PHONE (305) 883-9571



COPYRIGHT 1995 KNEZEVICH & ASSOCIATES, INC.


SUPER ROLL-UP SHUTTER

HURST AWNING CO., INC.
5795 N.W. 36TH AVE.
MIAMI, FL. 33142
(305) 635-0900

| revisions | | | |
|---|---|---|---|
| no | date | by | description |
| 1 | 11/30/95 | | COUNTY COMMENTS |

V.J. KNEZEVICH
PROFESSIONAL ENGINEER
Fl. License No. PE 0010993
DEC - 5 1995

| | |
|---|---|
| date | 6-12-95 |
| scale AS NOTED | drawn by J.V. HILL |
| design by V.J.K | checked by V.J.K |
| drawing no. 95-187 | |
| sheet 8 of 10 | |

# HEADER LENGTH OR SHUTTER WIDTH SCHEDULE (I)

HEADER - MAX. LENGTH (INCHES)

HEADER TYPE

| NEGATIVE DESIGN LOAD (P.S.F.) | MAXIMUM SLAT SPAN USED (IN) | (5) 2" x 3" STORM BAR HEIGHT | | | | | | | | (7) 2" x 4" STORM BAR HEIGHT | | | | | | | |
|---|---|---|---|---|---|---|---|---|---|---|---|---|---|---|---|---|---|
| | | 48 | 60 | 72 | 84 | 96 | 120 | 180 | 240 | 48 | 60 | 72 | 84 | 96 | 120 | 180 | 240 |
| 40 | 24 | 152 | 136 | 125 | 116 | 108 | 97 | 79 | 69 | 185 | 166 | 152 | 141 | 132 | 119 | 98 | 85 |
| | 36 | 152 | 136 | 125 | 116 | 108 | 98 | 71 | 61 | 185 | 166 | 152 | 141 | 132 | 119 | 99 | 85 |
| | 48 | 152 | 138 | 126 | 117 | 110 | 87 | 71 | 61 | 185 | 166 | 152 | 143 | 134 | 120 | 87 | 76 |
| | 60 | 154 | 138 | 112 | 104 | 97 | 87 | 71 | 61 | 185 | 168 | 154 | 143 | 119 | 107 | 87 | 76 |
| | 72 | 136 | 122 | 112 | 104 | 97 | 87 | - | - | 187 | 168 | 137 | 127 | 119 | 107 | 87 | 76 |
| | 88 | 136 | 122 | 112 | 104 | 97 | - | - | - | 166 | 149 | 137 | 127 | 119 | 107 | - | - |
| 50 | 24 | 136 | 122 | 112 | 104 | 97 | 87 | 72 | 62 | 166 | 149 | 137 | 127 | 119 | 107 | 87 | 76 |
| | 36 | 136 | 122 | 112 | 105 | 98 | 88 | 63 | 55 | 166 | 149 | 137 | 127 | 119 | 108 | 88 | 68 |
| | 48 | 138 | 124 | 113 | 93 | 87 | 78 | 63 | 55 | 166 | 149 | 138 | 128 | 120 | 96 | 78 | 68 |
| | 60 | 138 | 110 | 100 | 93 | 87 | 78 | 63 | - | 168 | 151 | 138 | 114 | 107 | 96 | 78 | 68 |
| | 72 | 122 | 110 | 100 | 93 | 87 | 78 | - | - | 168 | 134 | 123 | 114 | 107 | 96 | 78 | - |
| | 88 | 122 | 110 | 100 | 93 | - | - | - | - | 149 | 134 | 123 | 114 | 107 | 96 | - | - |
| 60 | 24 | 125 | 112 | 102 | 95 | 88 | 79 | 65 | 57 | 152 | 137 | 125 | 116 | 109 | 98 | 80 | 70 |
| | 36 | 125 | 112 | 103 | 96 | 89 | 71 | 58 | 50 | 152 | 137 | 125 | 116 | 109 | 99 | 71 | 62 |
| | 48 | 126 | 113 | 91 | 85 | 79 | 71 | 58 | 50 | 152 | 138 | 126 | 117 | 110 | 87 | 71 | 62 |
| | 60 | 112 | 100 | 91 | 85 | 79 | 71 | - | - | 154 | 138 | 112 | 104 | 98 | 87 | 71 | 62 |
| | 72 | 112 | 100 | 91 | 85 | 79 | - | - | - | 137 | 123 | 112 | 104 | 98 | 87 | - | - |
| | 88 | 112 | 100 | 91 | - | - | - | - | - | 137 | 123 | 112 | 104 | 98 | - | - | - |
| 70 | 24 | 116 | 104 | 95 | 88 | 82 | 73 | 60 | 46 | 141 | 127 | 116 | 108 | 101 | 90 | 74 | 65 |
| | 36 | 116 | 105 | 96 | 89 | 83 | 66 | 53 | 46 | 141 | 127 | 116 | 108 | 102 | 91 | 66 | 57 |
| | 48 | 117 | 93 | 85 | 78 | 73 | 66 | 53 | - | 143 | 128 | 117 | 109 | 90 | 81 | 66 | 57 |
| | 60 | 104 | 93 | 85 | 78 | 73 | 66 | - | - | 143 | 114 | 104 | 97 | 90 | 81 | 66 | - |
| | 72 | 104 | 93 | 85 | 78 | 73 | - | - | - | 127 | 114 | 104 | 97 | 90 | 81 | - | - |
| | 84 | 104 | 93 | 85 | - | - | - | - | - | 127 | 114 | 104 | 97 | 90 | - | - | - |
| | 88 | 104 | 93 | - | - | - | - | - | - | 127 | 114 | 104 | 97 | 90 | - | - | - |
| 80 | 24 | 108 | 97 | 88 | 82 | 77 | 69 | 57 | 43 | 132 | 119 | 109 | 101 | 94 | 85 | 70 | 60 |
| | 36 | 108 | 98 | 89 | 83 | 69 | 61 | 50 | 43 | 132 | 119 | 109 | 102 | 96 | 85 | 62 | 53 |
| | 48 | 110 | 87 | 79 | 73 | 69 | 61 | 50 | - | 134 | 120 | 110 | 90 | 85 | 76 | 62 | 53 |
| | 60 | 97 | 87 | 79 | 73 | 69 | 61 | - | - | 119 | 107 | 98 | 90 | 85 | 76 | 62 | - |
| | 72 | 97 | 87 | 79 | 73 | - | - | - | - | 119 | 107 | 98 | 90 | 85 | 76 | - | - |
| | 78 | 97 | 87 | 79 | - | - | - | - | - | 119 | 107 | 98 | 90 | 85 | - | - | - |
| | 85 | 97 | 87 | - | - | - | - | - | - | 119 | 107 | 98 | 90 | - | - | - | - |
| 90 | 24 | 102 | 91 | 83 | 77 | 72 | 65 | 47 | 41 | 125 | 112 | 103 | 95 | 89 | 80 | 66 | 57 |
| | 36 | 103 | 92 | 84 | 69 | 65 | 58 | 47 | 41 | 125 | 112 | 104 | 96 | 90 | 71 | 58 | 50 |
| | 48 | 91 | 82 | 75 | 69 | 65 | 58 | - | - | 126 | 113 | 92 | 85 | 80 | 71 | 58 | 50 |
| | 60 | 91 | 82 | 75 | 69 | 65 | - | - | - | 112 | 101 | 92 | 85 | 80 | 71 | - | - |
| | 72 | 91 | 82 | 75 | - | - | - | - | - | 112 | 101 | 92 | 85 | 80 | - | - | - |
| | 78 | 91 | 82 | - | - | - | - | - | - | 112 | 101 | 92 | 85 | 80 | - | - | - |
| | 83 | 91 | - | - | - | - | - | - | - | 112 | 101 | 92 | 85 | - | - | - | - |
| 100 | 24 | 97 | 87 | 79 | 73 | 69 | 62 | 45 | 39 | 119 | 107 | 98 | 90 | 85 | 76 | 62 | 48 |
| | 36 | 98 | 88 | 71 | 66 | 61 | 55 | 45 | 39 | 119 | 108 | 99 | 91 | 85 | 68 | 55 | 48 |
| | 48 | 87 | 78 | 71 | 66 | 61 | 55 | - | - | 120 | 96 | 87 | 81 | 76 | 68 | 55 | - |
| | 60 | 87 | 78 | 71 | 66 | 61 | - | - | - | 107 | 96 | 87 | 81 | 76 | 68 | - | - |
| | 66 | 87 | 78 | 71 | - | - | - | - | - | 107 | 96 | 87 | 81 | 76 | 68 | - | - |
| | 72 | 87 | 78 | - | - | - | - | - | - | 107 | 96 | 87 | 81 | 76 | - | - | - |
| | 80 | 87 | - | - | - | - | - | - | - | 107 | 96 | 87 | 81 | - | - | - | - |
| 110 | 24 | 92 | 83 | 75 | 71 | 66 | 59 | 43 | 37 | 113 | 102 | 93 | 86 | 81 | 72 | 60 | 46 |
| | 36 | 93 | 84 | 67 | 62 | 58 | 52 | 43 | 37 | 113 | 103 | 94 | 87 | 81 | 64 | 53 | 46 |
| | 48 | 83 | 74 | 67 | 62 | 58 | 52 | - | - | 115 | 91 | 83 | 77 | 72 | 64 | 53 | - |
| | 60 | 83 | 74 | 67 | 62 | - | - | - | - | 102 | 91 | 83 | 77 | 72 | 64 | - | - |
| | 66 | 83 | 74 | 67 | - | - | - | - | - | 102 | 91 | 83 | 77 | 72 | - | - | - |
| | 72 | 83 | 74 | - | - | - | - | - | - | 102 | 91 | 83 | 77 | 72 | - | - | - |
| | 78 | 83 | - | - | - | - | - | - | - | 102 | 91 | 83 | - | - | - | - | - |
| 120 | 24 | 88 | 79 | 72 | 68 | 63 | 57 | 41 | 35 | 109 | 98 | 89 | 82 | 77 | 70 | 57 | 44 |
| | 36 | 89 | 71 | 65 | 60 | 56 | 50 | 41 | - | 109 | 99 | 90 | 83 | 69 | 62 | 50 | 44 |
| | 48 | 79 | 71 | 65 | 60 | 56 | 50 | - | - | 110 | 87 | 80 | 74 | 69 | 62 | 50 | - |
| | 60 | 79 | 71 | 65 | - | - | - | - | - | 98 | 87 | 80 | 74 | 69 | 62 | - | - |
| | 66 | 79 | 71 | - | - | - | - | - | - | 98 | 87 | 80 | 74 | 69 | - | - | - |
| | 72 | 79 | - | - | - | - | - | - | - | 98 | 87 | 80 | 74 | - | - | - | - |
| | 77 | 79 | - | - | - | - | - | - | - | 98 | 87 | 80 | - | - | - | - | - |
| 130 | 24 | 85 | 76 | 70 | 65 | 61 | 54 | 39 | 34 | 105 | 94 | 86 | 79 | 74 | 67 | 55 | 42 |
| | 36 | 86 | 68 | 62 | 57 | 54 | 48 | 39 | - | 106 | 95 | 87 | 71 | 66 | 59 | 48 | 42 |
| | 48 | 76 | 68 | 62 | 57 | 54 | 48 | - | - | 94 | 84 | 77 | 71 | 66 | 59 | 48 | - |
| | 60 | 76 | 68 | 62 | - | - | - | - | - | 94 | 84 | 77 | 71 | 66 | - | - | - |
| | 66 | 76 | 68 | - | - | - | - | - | - | 94 | 84 | 77 | 71 | 66 | - | - | - |
| | 72 | 76 | - | - | - | - | - | - | - | 94 | 84 | 77 | - | - | - | - | - |
| | 75 | 76 | - | - | - | - | - | - | - | 94 | 84 | 77 | - | - | - | - | - |

| NEGATIVE DESIGN LOAD (P.S.F.) | MAXIMUM SLAT SPAN USED (IN) | (10) 2" x 5" STORM BAR HEIGHT | | | | | | | | (12) 2" x 6" STORM BAR HEIGHT | | | | | | | |
|---|---|---|---|---|---|---|---|---|---|---|---|---|---|---|---|---|---|
| | | 48 | 60 | 72 | 84 | 96 | 120 | 180 | 240 | 48 | 60 | 72 | 84 | 96 | 120 | 180 | 240 |
| 40 | 24 | 216 | 194 | 178 | 165 | 155 | 139 | 114 | 99 | 245 | 221 | 202 | 188 | 176 | 159 | 130 | 114 |
| | 36 | 216 | 194 | 178 | 165 | 155 | 139 | 114 | 101 | 245 | 221 | 202 | 188 | 176 | 159 | 130 | 114 |
| | 48 | 216 | 194 | 178 | 165 | 155 | 141 | 116 | 89 | 245 | 221 | 202 | 188 | 176 | 159 | 132 | 115 |
| | 60 | 216 | 194 | 180 | 167 | 157 | 141 | 103 | 89 | 245 | 221 | 202 | 188 | 178 | 160 | 117 | 102 |
| | 72 | 216 | 196 | 180 | 167 | 139 | 125 | 103 | 89 | 245 | 221 | 205 | 190 | 178 | 160 | 117 | 102 |
| | 88 | 218 | 196 | 160 | 148 | 139 | 125 | 103 | 89 | 248 | 223 | 205 | 169 | 159 | 142 | 117 | 102 |
| 50 | 24 | 194 | 174 | 160 | 148 | 139 | 125 | 103 | 89 | 221 | 198 | 182 | 169 | 159 | 142 | 117 | 102 |
| | 36 | 194 | 174 | 160 | 148 | 139 | 125 | 104 | 90 | 221 | 198 | 182 | 169 | 159 | 142 | 117 | 103 |
| | 48 | 194 | 174 | 160 | 148 | 141 | 126 | 92 | 80 | 221 | 198 | 182 | 169 | 159 | 144 | 118 | 92 |
| | 60 | 194 | 176 | 161 | 150 | 141 | 112 | 92 | 80 | 221 | 198 | 182 | 171 | 160 | 144 | 105 | 92 |
| | 72 | 196 | 176 | 161 | 133 | 125 | 112 | 92 | 80 | 221 | 201 | 184 | 171 | 160 | 128 | 105 | 92 |
| | 88 | 196 | 157 | 143 | 133 | 125 | 112 | 92 | - | 223 | 201 | 164 | 152 | 142 | 128 | 105 | 92 |
| 60 | 24 | 178 | 160 | 146 | 136 | 127 | 114 | 94 | 82 | 202 | 182 | 167 | 155 | 145 | 130 | 107 | 93 |
| | 36 | 178 | 160 | 146 | 136 | 127 | 114 | 95 | 83 | 202 | 182 | 167 | 155 | 145 | 130 | 109 | 94 |
| | 48 | 178 | 160 | 146 | 137 | 129 | 116 | 84 | 73 | 202 | 182 | 167 | 155 | 145 | 132 | 108 | 84 |
| | 60 | 180 | 161 | 148 | 137 | 114 | 103 | 84 | 73 | 202 | 182 | 169 | 157 | 147 | 117 | 96 | 84 |
| | 72 | 180 | 161 | 131 | 122 | 114 | 103 | 84 | 73 | 205 | 184 | 169 | 139 | 130 | 117 | 96 | 84 |
| | 88 | 160 | 143 | 131 | 122 | 114 | 103 | - | - | 205 | 164 | 150 | 139 | 130 | 117 | 96 | - |
| 70 | 24 | 165 | 148 | 136 | 126 | 118 | 106 | 87 | 76 | 188 | 169 | 155 | 144 | 135 | 121 | 100 | 87 |
| | 36 | 165 | 148 | 136 | 126 | 118 | 107 | 88 | 68 | 188 | 169 | 155 | 144 | 135 | 121 | 101 | 88 |
| | 48 | 165 | 148 | 137 | 127 | 120 | 95 | 78 | 68 | 188 | 169 | 155 | 145 | 136 | 122 | 89 | 78 |
| | 60 | 167 | 150 | 137 | 113 | 106 | 95 | 78 | 68 | 188 | 171 | 157 | 145 | 136 | 109 | 89 | 78 |
| | 72 | 167 | 133 | 122 | 113 | 106 | 95 | 78 | - | 190 | 171 | 139 | 129 | 121 | 109 | 89 | 78 |
| | 84 | 148 | 133 | 122 | 113 | 106 | 95 | - | - | 190 | 152 | 139 | 129 | 121 | 109 | 89 | - |
| | 88 | 148 | 133 | 122 | 113 | 106 | 95 | - | - | 169 | 152 | 139 | 129 | 121 | 109 | 89 | - |
| 80 | 24 | 155 | 139 | 127 | 118 | 111 | 99 | 82 | 71 | 176 | 159 | 145 | 135 | 126 | 114 | 93 | 81 |
| | 36 | 155 | 139 | 127 | 118 | 111 | 101 | 83 | 63 | 176 | 159 | 145 | 135 | 126 | 114 | 94 | 82 |
| | 48 | 155 | 141 | 129 | 120 | 112 | 89 | 73 | 63 | 176 | 159 | 145 | 136 | 128 | 115 | 84 | 73 |
| | 60 | 157 | 141 | 114 | 106 | 99 | 89 | 73 | 63 | 178 | 160 | 147 | 136 | 114 | 102 | 84 | 73 |
| | 72 | 139 | 125 | 114 | 106 | 99 | 89 | 73 | - | 178 | 160 | 130 | 121 | 114 | 102 | 84 | 73 |
| | 78 | 139 | 125 | 114 | 106 | 99 | 89 | - | - | 178 | 142 | 130 | 121 | 114 | 102 | 84 | - |
| | 85 | 139 | 125 | 114 | 106 | 99 | 89 | - | - | 159 | 142 | 130 | 121 | 114 | 102 | - | - |
| 90 | 24 | 146 | 131 | 120 | 112 | 105 | 94 | 77 | 67 | 167 | 150 | 137 | 127 | 120 | 107 | 88 | 77 |
| | 36 | 146 | 131 | 120 | 112 | 106 | 95 | 69 | 60 | 167 | 150 | 137 | 127 | 120 | 109 | 89 | 69 |
| | 48 | 146 | 133 | 122 | 113 | 94 | 84 | 69 | 60 | 167 | 150 | 139 | 129 | 121 | 108 | 79 | 69 |
| | 60 | 148 | 118 | 108 | 100 | 94 | 84 | 69 | - | 169 | 151 | 139 | 114 | 107 | 96 | 79 | 69 |
| | 72 | 131 | 118 | 108 | 100 | 94 | 84 | - | - | 169 | 135 | 123 | 114 | 107 | 96 | 79 | - |
| | 78 | 131 | 118 | 108 | 100 | 94 | 84 | - | - | 150 | 135 | 123 | 114 | 107 | 96 | 79 | - |
| | 83 | 131 | 118 | 108 | 100 | 94 | 84 | - | - | 150 | 135 | 123 | 114 | 107 | 96 | - | - |
| 100 | 24 | 139 | 125 | 114 | 106 | 99 | 89 | 73 | 64 | 159 | 142 | 130 | 121 | 114 | 102 | 84 | 73 |
| | 36 | 139 | 125 | 114 | 107 | 101 | 90 | 65 | 57 | 159 | 142 | 130 | 121 | 114 | 103 | 85 | 65 |
| | 48 | 141 | 126 | 116 | 95 | 89 | 80 | 65 | 57 | 159 | 144 | 132 | 122 | 115 | 92 | 75 | 65 |
| | 60 | 141 | 112 | 103 | 95 | 89 | 80 | 65 | - | 160 | 144 | 117 | 109 | 102 | 92 | 75 | 65 |
| | 66 | 125 | 112 | 103 | 95 | 89 | 80 | - | - | 160 | 128 | 117 | 109 | 102 | 92 | 75 | - |
| | 72 | 125 | 112 | 103 | 95 | 89 | 80 | - | - | 160 | 128 | 117 | 109 | 102 | 92 | 75 | - |
| | 80 | 125 | 112 | 103 | 95 | 89 | 80 | - | - | 142 | 128 | 117 | 109 | 102 | 92 | - | - |
| 110 | 24 | 133 | 119 | 109 | 101 | 95 | 85 | 70 | 61 | 151 | 136 | 125 | 116 | 108 | 97 | 80 | 70 |
| | 36 | 133 | 119 | 109 | 102 | 96 | 86 | 62 | 54 | 151 | 136 | 125 | 116 | 108 | 98 | 72 | 62 |
| | 48 | 134 | 121 | 110 | 91 | 85 | 76 | 62 | 54 | 151 | 138 | 126 | 117 | 110 | 87 | 72 | 62 |
| | 60 | 134 | 107 | 98 | 91 | 85 | 76 | 62 | - | 153 | 138 | 112 | 104 | 97 | 87 | 72 | 62 |
| | 66 | 119 | 107 | 98 | 91 | 85 | 76 | - | - | 153 | 122 | 112 | 104 | 97 | 87 | 72 | - |
| | 72 | 119 | 107 | 98 | 91 | 85 | 76 | - | - | 136 | 122 | 112 | 104 | 97 | 87 | - | - |
| | 78 | 119 | 107 | 98 | 91 | 85 | - | - | - | 136 | 122 | 112 | 104 | 97 | 87 | - | - |
| 120 | 24 | 127 | 114 | 105 | 97 | 91 | 82 | 67 | 58 | 145 | 130 | 120 | 111 | 104 | 93 | 77 | 67 |
| | 36 | 127 | 114 | 106 | 98 | 92 | 83 | 60 | 52 | 145 | 130 | 120 | 111 | 105 | 94 | 69 | 59 |
| | 48 | 129 | 116 | 94 | 87 | 82 | 73 | 60 | 52 | 145 | 132 | 121 | 112 | 93 | 84 | 69 | 59 |
| | 60 | 114 | 103 | 94 | 87 | 82 | 73 | - | - | 147 | 117 | 107 | 100 | 93 | 84 | 69 | - |
| | 72 | 114 | 103 | 94 | 87 | 82 | 73 | - | - | 147 | 117 | 107 | 100 | 93 | 84 | 69 | - |
| | 77 | 114 | 103 | 94 | 87 | 82 | 73 | - | - | 130 | 117 | 107 | 100 | 93 | 84 | - | - |
| 130 | 24 | 123 | 110 | 101 | 93 | 88 | 78 | 65 | 56 | 140 | 126 | 115 | 107 | 100 | 90 | 74 | 65 |
| | 36 | 123 | 110 | 102 | 94 | 89 | 70 | 57 | 50 | 140 | 126 | 115 | 108 | 101 | 91 | 66 | 57 |
| | 48 | 124 | 111 | 90 | 84 | 78 | 70 | 57 | 50 | 141 | 127 | 116 | 108 | 90 | 81 | 66 | 57 |
| | 60 | 110 | 99 | 90 | 84 | 78 | 70 | - | - | 141 | 113 | 103 | 96 | 90 | 81 | 66 | - |
| | 66 | 110 | 99 | 90 | 84 | 78 | 70 | - | - | 126 | 113 | 103 | 96 | 90 | 81 | - | - |
| | 72 | 110 | 99 | 90 | 84 | 78 | - | - | - | 126 | 113 | 103 | 96 | 90 | 81 | - | - |
| | 75 | 110 | 99 | 90 | 84 | 78 | - | - | - | 126 | 113 | 103 | 96 | 90 | 81 | - | - |

| NEGATIVE DESIGN LOAD (P.S.F.) | MAXIMUM SLAT SPAN USED (IN) | (13) 2" x 7" STORM BAR HEIGHT | | | | | | | | (14) 2" x 9" STORM BAR HEIGHT | | | | | | | |
|---|---|---|---|---|---|---|---|---|---|---|---|---|---|---|---|---|---|
| | | 48 | 60 | 72 | 84 | 96 | 120 | 180 | 240 | 48 | 60 | 72 | 84 | 96 | 120 | 180 | 240 |
| 40 | 24 | 274 | 246 | 226 | 210 | 197 | 177 | 146 | 127 | 284 | 254 | 232 | 214 | 201 | 179 | 147 | 127 |
| | 36 | 274 | 246 | 226 | 210 | 197 | 177 | 146 | 127 | 284 | 254 | 232 | 214 | 201 | 179 | 147 | 127 |
| | 48 | 274 | 246 | 226 | 210 | 197 | 177 | 146 | 129 | 284 | 254 | 232 | 214 | 201 | 179 | 147 | 128 |
| | 60 | 274 | 246 | 226 | 210 | 197 | 179 | 148 | 114 | 284 | 254 | 232 | 214 | 201 | 181 | 148 | 113 |
| | 72 | 274 | 246 | 226 | 212 | 199 | 179 | 131 | 114 | 284 | 254 | 232 | 214 | 203 | 181 | 131 | 113 |
| | 88 | 274 | 249 | 228 | 212 | 199 | 159 | 131 | 114 | 284 | 257 | 234 | 217 | 203 | 160 | 131 | 113 |
| 50 | 24 | 246 | 222 | 203 | 189 | 177 | 159 | 131 | 114 | 254 | 227 | 207 | 192 | 179 | 160 | 131 | 113 |
| | 36 | 246 | 222 | 203 | 189 | 177 | 159 | 131 | 114 | 254 | 227 | 207 | 192 | 179 | 160 | 131 | 113 |
| | 48 | 246 | 222 | 203 | 189 | 177 | 159 | 133 | 116 | 254 | 227 | 207 | 192 | 179 | 160 | 133 | 115 |
| | 60 | 246 | 222 | 203 | 189 | 179 | 161 | 118 | 103 | 254 | 227 | 207 | 192 | 181 | 162 | 133 | 102 |
| | 72 | 246 | 222 | 205 | 191 | 179 | 161 | 118 | 103 | 254 | 227 | 210 | 194 | 181 | 162 | 117 | 102 |
| | 88 | 249 | 224 | 205 | 170 | 159 | 143 | 118 | 103 | 257 | 230 | 210 | 194 | 160 | 144 | 117 | 102 |
| 60 | 24 | 226 | 203 | 186 | 173 | 163 | 146 | 120 | 105 | 232 | 207 | 189 | 175 | 164 | 147 | 120 | 104 |
| | 36 | 226 | 203 | 186 | 173 | 163 | 146 | 120 | 106 | 232 | 207 | 189 | 175 | 164 | 147 | 120 | 105 |
| | 48 | 226 | 203 | 186 | 173 | 163 | 146 | 122 | 94 | 232 | 207 | 189 | 175 | 164 | 147 | 121 | 105 |
| | 60 | 226 | 203 | 186 | 175 | 164 | 148 | 108 | 94 | 232 | 207 | 189 | 177 | 166 | 148 | 107 | 93 |
| | 72 | 226 | 205 | 188 | 175 | 164 | 131 | 108 | 94 | 232 | 210 | 191 | 177 | 166 | 131 | 107 | 93 |
| | 88 | 228 | 205 | 168 | 156 | 146 | 131 | 108 | 94 | 234 | 210 | 191 | 157 | 147 | 131 | 107 | 93 |
| 70 | 24 | 210 | 189 | 173 | 161 | 151 | 136 | 112 | 97 | 214 | 192 | 175 | 162 | 152 | 136 | 111 | 96 |
| | 36 | 210 | 189 | 173 | 161 | 151 | 136 | 112 | 98 | 214 | 192 | 175 | 162 | 152 | 136 | 111 | 97 |
| | 48 | 210 | 189 | 173 | 161 | 151 | 137 | 113 | 87 | 214 | 192 | 175 | 162 | 152 | 137 | 112 | 86 |
| | 60 | 210 | 189 | 175 | 163 | 153 | 137 | 100 | 87 | 214 | 192 | 177 | 164 | 153 | 137 | 99 | 86 |
| | 72 | 212 | 191 | 175 | 163 | 136 | 122 | 100 | 87 | 217 | 194 | 177 | 164 | 136 | 121 | 99 | 86 |
| | 84 | 212 | 191 | 156 | 145 | 136 | 122 | 100 | 87 | 217 | 194 | 157 | 145 | 136 | 121 | 99 | 86 |
| | 88 | 212 | 170 | 156 | 145 | 136 | 122 | 100 | - | 217 | 194 | 157 | 145 | 136 | 121 | 99 | - |
| 80 | 24 | 197 | 177 | 163 | 151 | 142 | 127 | 105 | 91 | 201 | 179 | 164 | 152 | 142 | 127 | 104 | 90 |
| | 36 | 197 | 177 | 163 | 151 | 142 | 127 | 106 | 92 | 201 | 179 | 164 | 152 | 142 | 127 | 105 | 91 |
| | 48 | 197 | 177 | 163 | 151 | 143 | 129 | 94 | 82 | 201 | 179 | 164 | 152 | 143 | 128 | 105 | 80 |
| | 60 | 197 | 179 | 164 | 153 | 143 | 114 | 94 | 82 | 201 | 181 | 166 | 153 | 143 | 113 | 93 | 80 |
| | 72 | 199 | 179 | 164 | 136 | 127 | 114 | 94 | 82 | 203 | 181 | 166 | 136 | 127 | 113 | 93 | 80 |
| | 78 | 199 | 179 | 146 | 136 | 127 | 114 | 94 | 82 | 203 | 181 | 147 | 136 | 127 | 113 | 93 | 80 |
| | 85 | 199 | 159 | 146 | 136 | 127 | 114 | 94 | - | 203 | 160 | 147 | 136 | 127 | 113 | 93 | - |
| 90 | 24 | 186 | 168 | 154 | 143 | 134 | 120 | 99 | 86 | 189 | 169 | 154 | 143 | 134 | 120 | 98 | 85 |
| | 36 | 186 | 168 | 154 | 143 | 134 | 120 | 100 | 87 | 189 | 169 | 154 | 143 | 134 | 120 | 99 | 86 |
| | 48 | 186 | 168 | 154 | 144 | 135 | 122 | 89 | 77 | 189 | 169 | 154 | 143 | 135 | 121 | 87 | 76 |
| | 60 | 186 | 169 | 155 | 144 | 135 | 108 | 89 | 77 | 189 | 171 | 156 | 145 | 135 | 107 | 87 | 76 |
| | 72 | 188 | 169 | 138 | 128 | 120 | 108 | 89 | 77 | 191 | 171 | 156 | 128 | 120 | 107 | 87 | 76 |
| | 78 | 188 | 151 | 138 | 128 | 120 | 108 | 89 | - | 191 | 171 | 138 | 128 | 120 | 107 | 87 | - |
| | 83 | 188 | 151 | 138 | 128 | 120 | 108 | 89 | - | 191 | 151 | 138 | 128 | 120 | 107 | 87 | - |
| 100 | 24 | 177 | 159 | 146 | 136 | 127 | 114 | 94 | 82 | 179 | 160 | 147 | 136 | 127 | 113 | 93 | 80 |
| | 36 | 177 | 159 | 146 | 136 | 127 | 114 | 95 | 83 | 179 | 160 | 147 | 136 | 127 | 113 | 94 | 81 |
| | 48 | 177 | 159 | 146 | 137 | 129 | 116 | 84 | 73 | 179 | 160 | 147 | 137 | 128 | 115 | 83 | 72 |
| | 60 | 179 | 161 | 148 | 137 | 114 | 103 | 84 | 73 | 181 | 162 | 148 | 137 | 113 | 102 | 83 | 72 |
| | 66 | 179 | 161 | 148 | 122 | 114 | 103 | 84 | 73 | 181 | 162 | 148 | 121 | 113 | 102 | 83 | 72 |
| | 72 | 179 | 161 | 131 | 122 | 114 | 103 | 84 | 73 | 181 | 162 | 131 | 121 | 113 | 102 | 83 | - |
| | 80 | 179 | 143 | 131 | 122 | 114 | 103 | 84 | - | 181 | 144 | 131 | 121 | 113 | 102 | 83 | - |
| 110 | 24 | 169 | 152 | 140 | 130 | 122 | 109 | 90 | 78 | 171 | 153 | 140 | 129 | 121 | 108 | 88 | 77 |
| | 36 | 169 | 152 | 140 | 130 | 122 | 109 | 91 | 70 | 171 | 153 | 140 | 129 | 121 | 108 | 89 | 68 |
| | 48 | 169 | 152 | 141 | 131 | 123 | 110 | 81 | 70 | 171 | 153 | 141 | 131 | 122 | 109 | 79 | 68 |
| | 60 | 171 | 154 | 141 | 116 | 109 | 98 | 81 | 70 | 173 | 155 | 141 | 131 | 108 | 97 | 79 | 68 |
| | 66 | 171 | 154 | 125 | 116 | 109 | 98 | 81 | 70 | 173 | 155 | 125 | 116 | 108 | 97 | 79 | 68 |
| | 72 | 171 | 137 | 125 | 116 | 109 | 98 | 81 | - | 173 | 137 | 125 | 116 | 108 | 97 | 79 | - |
| | 78 | 152 | 137 | 125 | 116 | 109 | 98 | 81 | - | 173 | 137 | 125 | 116 | 108 | 97 | 79 | - |
| 120 | 24 | 163 | 146 | 134 | 124 | 117 | 105 | 86 | 75 | 164 | 147 | 134 | 124 | 116 | 104 | 85 | 73 |
| | 36 | 163 | 146 | 134 | 124 | 117 | 106 | 87 | 67 | 164 | 147 | 134 | 124 | 116 | 105 | 86 | 66 |
| | 48 | 163 | 146 | 135 | 126 | 118 | 94 | 77 | 67 | 164 | 147 | 135 | 125 | 117 | 105 | 76 | 66 |
| | 60 | 164 | 148 | 135 | 112 | 105 | 94 | 77 | 67 | 166 | 148 | 135 | 111 | 104 | 93 | 76 | 66 |
| | 72 | 164 | 148 | 120 | 112 | 105 | 94 | 77 | 67 | 166 | 148 | 120 | 111 | 104 | 93 | 76 | - |
| | 77 | 164 | 131 | 120 | 112 | 105 | 94 | 77 | - | 166 | 131 | 120 | 111 | 104 | 93 | 76 | - |
| 130 | 24 | 146 | 131 | 120 | 112 | 105 | 94 | 77 | - | 166 | 131 | 120 | 111 | 104 | 93 | - | - |
| | 36 | 156 | 141 | 129 | 120 | 112 | 101 | 83 | 73 | 157 | 141 | 128 | 119 | 111 | 100 | 81 | 71 |
| | 48 | 156 | 141 | 129 | 120 | 112 | 102 | 84 | 64 | 157 | 141 | 128 | 119 | 111 | 101 | 82 | 63 |
| | 60 | 156 | 142 | 130 | 121 | 113 | 90 | 74 | 64 | 157 | 142 | 130 | 120 | 113 | 89 | 73 | 63 |
| | 66 | 158 | 142 | 116 | 107 | 101 | 90 | 74 | 64 | 159 | 142 | 130 | 106 | 100 | 89 | 73 | 63 |
| | 72 | 158 | 126 | 116 | 107 | 101 | 90 | 74 | - | 159 | 142 | 115 | 106 | 100 | 89 | 73 | - |
| | 75 | 141 | 126 | 116 | 107 | 101 | 90 | 74 | - | 159 | 126 | 115 | 106 | 100 | 89 | 73 | - |
| | | 141 | 126 | 116 | 107 | 101 | 90 | - | - | 141 | 126 | 115 | 106 | 100 | 89 | - | - |

NOTE: INTERPOLATE FOR HEADER SPANS AND REACTIONS BETWEEN THOSE SHOWN ON THIS SHEET.
FOR HEADER REACTION DETERMINATION AND END CONNECTION DETAILS/ANCHORS, SEE SCHEDULE E, SHEET 5 OF 10.

PRODUCT RENEWED
ACCEPTANCE No. 98-1214.09
EXPIRATION DATE December 08-01
By Manuel Perez
PRODUCT CONTROL DIVISION
BUILDING CODE COMPLIANCE OFFICE

PRODUCT RENEWED
ACCEPTANCE No. 01-0126.01
EXPIRATION DATE 02/08/2006
By Manuel Perez
PRODUCT CONTROL DIVISION
BUILDING CODE COMPLIANCE OFFICE

APPROVED AS COMPLYING WITH THE
SOUTH FLORIDA BUILDING CODE
DATE FEBRUARY 8, 1996
BY Manuel Perez
PRODUCT CONTROL DIVISION
BUILDING CODE COMPLIANCE OFFICE
ACCEPTANCE NO. 95-0908.07


KNEZEVICH & ASSOCIATES, INC.
CONSULTING ENGINEERS & PRODUCT TESTING
641 MOKENA DRIVE
MIAMI SPRINGS, FLORIDA 33166
PHONE (305) 883-9571


COPYRIGHT 1995 KNEZEVICH & ASSOCIATES, INC.


SUPER ROLL-UP SHUTTER
HURSTAWNING CO., INC.
5795 N.W. 36TH AVE.
MIAMI, FL 33142
(305) 635-0900

| no | date | by | description |
|---|---|---|---|
| revisions | | | |
| | 11/30/95 | | COUNTY COMMENTS |

V.J. KNEZEVICH
PROFESSIONAL ENGINEER
FL License No. PE 0010983

DEC 6 199

| | |
|---|---|
| date 6-12-95 | |
| scale AS NOTED | drawn by J.V. HILL |
| design by V.J.K | checked by V.J.K |
| drawing no. 95-187 | |
| sheet 9 of 10 | |

# HEADER LENGTH OR SHUTTER WIDTH SCHEDULE (I)

HEADER - MAX. LENGTH (INCHES)

HEADER TYPE

| NEGATIVE DESIGN LOAD (P.S.F.) | MAXIMUM SLAT SPAN USED (IN) | (5) 2" x 3" STORM BAR HEIGHT | | | | | | | | (7) 2" x 4" STORM BAR HEIGHT | | | | | | | |
|---|---|---|---|---|---|---|---|---|---|---|---|---|---|---|---|---|---|
| | | 48 | 60 | 72 | 84 | 96 | 120 | 180 | 240 | 48 | 60 | 72 | 84 | 96 | 120 | 180 | 240 |
| 140 | 24 | 82 | 73 | 68 | 63 | 59 | 46 | 38 | 33 | 101 | 90 | 82 | 76 | 72 | 65 | 47 | 40 |
| | 36 | 83 | 66 | 60 | 55 | 52 | 46 | 38 | - | 102 | 91 | 83 | 68 | 64 | 57 | 47 | 40 |
| | 48 | 73 | 66 | 60 | 55 | 52 | - | - | - | 90 | 81 | 74 | 68 | 64 | 57 | - | - |
| | 54 | 73 | 66 | 60 | 55 | - | - | - | - | 90 | 81 | 74 | 68 | 64 | 57 | - | - |
| | 60 | 73 | 66 | - | - | - | - | - | - | 90 | 81 | 74 | 68 | 64 | - | - | - |
| | 66 | 73 | - | - | - | - | - | - | - | 90 | 81 | 74 | 68 | - | - | - | - |
| | 74 | - | - | - | - | - | - | - | - | 90 | 81 | - | - | - | - | - | - |
| 150 | 24 | 79 | 72 | 65 | 60 | 57 | 45 | 37 | 32 | 98 | 87 | 80 | 74 | 70 | 62 | 45 | 39 |
| | 36 | 71 | 63 | 58 | 53 | 50 | 45 | 37 | - | 99 | 88 | 71 | 66 | 62 | 55 | 45 | 39 |
| | 48 | 71 | 63 | 58 | 53 | 50 | - | - | - | 87 | 78 | 71 | 66 | 62 | 55 | - | - |
| | 54 | 71 | 63 | 58 | - | - | - | - | - | 87 | 78 | 71 | 66 | 62 | 55 | - | - |
| | 60 | 71 | 63 | - | - | - | - | - | - | 87 | 78 | 71 | 66 | 62 | - | - | - |
| | 66 | 71 | - | - | - | - | - | - | - | 87 | 78 | 71 | - | - | - | - | - |
| | 73 | - | - | - | - | - | - | - | - | 87 | 78 | - | - | - | - | - | - |
| 160 | 24 | 77 | 69 | 63 | 59 | 55 | 43 | 35 | 31 | 94 | 85 | 77 | 71 | 68 | 60 | 44 | 38 |
| | 36 | 69 | 61 | 56 | 52 | 48 | 43 | - | - | 96 | 85 | 69 | 64 | 60 | 53 | 44 | 38 |
| | 48 | 69 | 61 | 56 | 52 | 48 | - | - | - | 85 | 76 | 69 | 64 | 60 | 53 | - | - |
| | 54 | 69 | 61 | 56 | - | - | - | - | - | 85 | 76 | 69 | 64 | 60 | - | - | - |
| | 60 | 69 | 61 | - | - | - | - | - | - | 85 | 76 | 69 | 64 | - | - | - | - |
| | 66 | 69 | - | - | - | - | - | - | - | 85 | 76 | 69 | - | - | - | - | - |
| | 71 | - | - | - | - | - | - | - | - | 85 | 76 | - | - | - | - | - | - |
| 170 | 24 | 74 | 67 | 61 | 57 | 47 | 42 | 34 | 30 | 92 | 82 | 75 | 70 | 66 | 59 | 42 | 37 |
| | 36 | 66 | 59 | 54 | 50 | 47 | 42 | - | - | 93 | 83 | 67 | 62 | 58 | 52 | 42 | 37 |
| | 48 | 66 | 59 | 54 | 50 | - | - | - | - | 82 | 73 | 67 | 62 | 58 | 52 | - | - |
| | 54 | 66 | 59 | 54 | - | - | - | - | - | 82 | 73 | 67 | 62 | 58 | - | - | - |
| | 60 | 66 | - | - | - | - | - | - | - | 82 | 73 | 67 | 62 | - | - | - | - |
| | 66 | 66 | - | - | - | - | - | - | - | 82 | 73 | 67 | - | - | - | - | - |
| | 70 | - | - | - | - | - | - | - | - | 82 | 73 | - | - | - | - | - | - |
| 180 | 24 | 72 | 65 | 60 | 55 | 46 | 41 | 33 | 29 | 89 | 80 | 73 | 68 | 64 | 57 | 41 | 36 |
| | 36 | 65 | 58 | 53 | 49 | 46 | 41 | - | - | 90 | 71 | 65 | 60 | 56 | 50 | 41 | - |
| | 48 | 65 | 58 | 53 | 49 | - | - | - | - | 80 | 71 | 65 | 60 | 56 | 50 | - | - |
| | 54 | 65 | 58 | - | - | - | - | - | - | 80 | 71 | 65 | 60 | 56 | - | - | - |
| | 60 | 65 | - | - | - | - | - | - | - | 80 | 71 | 65 | 60 | - | - | - | - |
| | 66 | - | - | - | - | - | - | - | - | 80 | 71 | - | - | - | - | - | - |
| | 69 | - | - | - | - | - | - | - | - | 80 | 71 | - | - | - | - | - | - |
| 190 | 24 | 71 | 64 | 58 | 48 | 44 | 40 | 32 | 28 | 87 | 78 | 72 | 66 | 62 | 55 | 40 | 35 |
| | 36 | 63 | 56 | 51 | 48 | 44 | 40 | - | - | 88 | 69 | 63 | 59 | 55 | 49 | 40 | - |
| | 48 | 63 | 56 | 51 | - | - | - | - | - | 78 | 69 | 63 | 59 | 55 | 49 | - | - |
| | 54 | 63 | 56 | - | - | - | - | - | - | 78 | 69 | 63 | 59 | 55 | - | - | - |
| | 60 | 63 | - | - | - | - | - | - | - | 78 | 69 | 63 | - | - | - | - | - |
| | 66 | - | - | - | - | - | - | - | - | 78 | 69 | - | - | - | - | - | - |
| | 68 | - | - | - | - | - | - | - | - | 78 | 69 | - | - | - | - | - | - |
| 200 | 24 | 69 | 62 | 57 | 46 | 43 | 39 | 32 | 27 | 85 | 76 | 70 | 65 | 60 | 48 | 39 | 34 |
| | 30 | 69 | 55 | 50 | 46 | 43 | 39 | 32 | - | 85 | 76 | 70 | 57 | 53 | 48 | 39 | 34 |
| | 36 | 61 | 55 | 50 | 46 | 43 | 39 | - | - | 85 | 68 | 62 | 57 | 53 | 48 | 39 | - |
| | 42 | 61 | 55 | 50 | 46 | 43 | - | - | - | 76 | 68 | 62 | 57 | 53 | 48 | - | - |
| | 48 | 61 | 55 | 50 | - | - | - | - | - | 76 | 68 | 62 | 57 | 53 | - | - | - |
| | 54 | 61 | 55 | - | - | - | - | - | - | 76 | 68 | 62 | 57 | - | - | - | - |
| | 68 | - | - | - | - | - | - | - | - | 76 | 68 | - | - | - | - | - | - |
| 210 | 24 | 68 | 60 | 55 | 45 | 42 | 38 | 31 | 27 | 82 | 74 | 68 | 63 | 59 | 47 | 38 | 33 |
| | 30 | 60 | 53 | 49 | 45 | 42 | 38 | 31 | - | 83 | 75 | 68 | 56 | 52 | 47 | 38 | 33 |
| | 36 | 60 | 53 | 49 | 45 | 42 | 38 | - | - | 83 | 66 | 60 | 56 | 52 | 47 | 38 | - |
| | 42 | 60 | 53 | 49 | 45 | 42 | - | - | - | 74 | 66 | 60 | 56 | 52 | 47 | - | - |
| | 48 | 60 | 53 | 49 | - | - | - | - | - | 74 | 66 | 60 | 56 | 52 | - | - | - |
| | 54 | 60 | - | - | - | - | - | - | - | 74 | 66 | 60 | 56 | - | - | - | - |
| | 67 | - | - | - | - | - | - | - | - | 74 | - | - | - | - | - | - | - |
| 220 | 24 | 66 | 59 | 48 | 44 | 41 | 37 | 30 | 26 | 81 | 72 | 67 | 62 | 58 | 46 | 37 | 32 |
| | 30 | 58 | 52 | 48 | 44 | 41 | 37 | 30 | - | 81 | 73 | 59 | 54 | 51 | 46 | 37 | 32 |
| | 36 | 58 | 52 | 48 | 44 | 41 | 37 | - | - | 81 | 64 | 59 | 54 | 51 | 46 | 37 | - |
| | 42 | 58 | 52 | 48 | 44 | - | - | - | - | 72 | 64 | 59 | 54 | 51 | 46 | - | - |
| | 48 | 58 | 52 | - | - | - | - | - | - | 72 | 64 | 59 | 54 | 51 | - | - | - |
| | 54 | 58 | - | - | - | - | - | - | - | 72 | 64 | 59 | 54 | - | - | - | - |
| | 66 | - | - | - | - | - | - | - | - | 72 | - | - | - | - | - | - | - |
| 230 | 24 | 65 | 58 | 47 | 43 | 40 | 36 | 30 | 26 | 79 | 71 | 65 | 60 | 56 | 45 | 36 | 32 |
| | 30 | 57 | 51 | 47 | 43 | 40 | 36 | - | - | 80 | 71 | 58 | 53 | 50 | 45 | 36 | 32 |
| | 36 | 57 | 51 | 47 | 43 | 40 | 36 | - | - | 70 | 63 | 58 | 53 | 50 | 45 | 36 | - |
| | 42 | 57 | 51 | 47 | 43 | - | - | - | - | 70 | 63 | 58 | 53 | 50 | 45 | - | - |
| | 48 | 57 | 51 | - | - | - | - | - | - | 70 | 63 | 58 | 53 | 50 | - | - | - |
| | 54 | 57 | - | - | - | - | - | - | - | 70 | 63 | 58 | - | - | - | - | - |
| | 65 | - | - | - | - | - | - | - | - | 70 | - | - | - | - | - | - | - |

| NEGATIVE DESIGN LOAD (P.S.F.) | MAXIMUM SLAT SPAN USED (IN) | (10) 2" x 5" STORM BAR HEIGHT | | | | | | | | (12) 2" x 6" STORM BAR HEIGHT | | | | | | | |
|---|---|---|---|---|---|---|---|---|---|---|---|---|---|---|---|---|---|
| | | 48 | 60 | 72 | 84 | 96 | 120 | 180 | 240 | 48 | 60 | 72 | 84 | 96 | 120 | 180 | 240 |
| 140 | 24 | 118 | 106 | 97 | 90 | 84 | 76 | 62 | 48 | 135 | 121 | 111 | 103 | 97 | 87 | 72 | 62 |
| | 36 | 118 | 107 | 98 | 91 | 85 | 68 | 55 | 48 | 135 | 121 | 111 | 104 | 98 | 88 | 64 | 55 |
| | 48 | 120 | 95 | 87 | 81 | 76 | 68 | 55 | - | 136 | 122 | 112 | 92 | 87 | 78 | 64 | 55 |
| | 54 | 106 | 95 | 87 | 81 | 76 | 68 | 55 | - | 136 | 122 | 100 | 92 | 87 | 78 | 64 | 55 |
| | 60 | 106 | 95 | 87 | 81 | 76 | 68 | - | - | 136 | 109 | 100 | 92 | 87 | 78 | 64 | - |
| | 66 | 106 | 95 | 87 | 81 | 76 | 68 | - | - | 121 | 109 | 100 | 92 | 87 | 78 | - | - |
| | 74 | 106 | 95 | 87 | 81 | 76 | - | - | - | 121 | 109 | 100 | 92 | 87 | 78 | - | - |
| 150 | 24 | 114 | 103 | 94 | 87 | 82 | 73 | 60 | 46 | 130 | 117 | 107 | 100 | 93 | 84 | 69 | 60 |
| | 36 | 114 | 104 | 95 | 88 | 83 | 65 | 53 | 46 | 130 | 117 | 107 | 101 | 94 | 85 | 61 | 53 |
| | 48 | 116 | 92 | 84 | 78 | 73 | 65 | 53 | - | 132 | 118 | 108 | 89 | 84 | 75 | 61 | 53 |
| | 54 | 103 | 92 | 84 | 78 | 73 | 65 | - | - | 132 | 105 | 96 | 89 | 84 | 75 | 61 | - |
| | 60 | 103 | 92 | 84 | 78 | 73 | 65 | - | - | 117 | 105 | 96 | 89 | 84 | 75 | 61 | - |
| | 66 | 103 | 92 | 84 | 78 | 73 | - | - | - | 117 | 105 | 96 | 89 | 84 | 75 | - | - |
| | 73 | 103 | 92 | 84 | 78 | 73 | - | - | - | 117 | 105 | 96 | 89 | 84 | 75 | - | - |
| 160 | 24 | 111 | 99 | 91 | 84 | 79 | 71 | 58 | 45 | 126 | 114 | 104 | 97 | 90 | 81 | 67 | 58 |
| | 36 | 111 | 101 | 92 | 85 | 71 | 63 | 52 | 45 | 126 | 114 | 105 | 98 | 91 | 82 | 59 | 51 |
| | 48 | 112 | 89 | 82 | 76 | 71 | 63 | 52 | - | 128 | 115 | 93 | 87 | 81 | 73 | 59 | 51 |
| | 54 | 99 | 89 | 82 | 76 | 71 | 63 | - | - | 128 | 102 | 93 | 87 | 81 | 73 | 59 | - |
| | 60 | 99 | 89 | 82 | 76 | 71 | 63 | - | - | 114 | 102 | 93 | 87 | 81 | 73 | - | - |
| | 66 | 99 | 89 | 82 | 76 | 71 | - | - | - | 114 | 102 | 93 | 87 | 81 | 73 | - | - |
| | 71 | 99 | 89 | 82 | 76 | - | - | - | - | 114 | 102 | 93 | 87 | 81 | 73 | - | - |
| 170 | 24 | 108 | 97 | 88 | 82 | 77 | 69 | 57 | 43 | 123 | 110 | 101 | 94 | 88 | 79 | 65 | 56 |
| | 36 | 109 | 98 | 89 | 83 | 69 | 61 | 50 | 43 | 123 | 110 | 102 | 95 | 89 | 71 | 58 | 50 |
| | 48 | 109 | 87 | 79 | 73 | 69 | 61 | 50 | - | 124 | 112 | 91 | 84 | 79 | 71 | 58 | 50 |
| | 54 | 97 | 87 | 79 | 73 | 69 | 61 | - | - | 124 | 99 | 91 | 84 | 79 | 71 | 58 | - |
| | 60 | 97 | 87 | 79 | 73 | 69 | 61 | - | - | 110 | 99 | 91 | 84 | 79 | 71 | - | - |
| | 66 | 97 | 87 | 79 | 73 | 69 | - | - | - | 110 | 99 | 91 | 84 | 79 | 71 | - | - |
| | 70 | 97 | 87 | 79 | 73 | - | - | - | - | 110 | 99 | 2 | 84 | 79 | 71 | - | - |
| 180 | 24 | 105 | 94 | 86 | 80 | 75 | 67 | 55 | 42 | 120 | 107 | 98 | 91 | 85 | 77 | 63 | 55 |
| | 36 | 106 | 95 | 87 | 71 | 67 | 60 | 49 | 42 | 120 | 107 | 99 | 92 | 86 | 69 | 56 | 49 |
| | 48 | 94 | 84 | 77 | 71 | 67 | 60 | 49 | - | 121 | 109 | 88 | 82 | 77 | 69 | 56 | 49 |
| | 54 | 94 | 84 | 77 | 71 | 67 | 60 | - | - | 121 | 96 | 88 | 82 | 77 | 69 | 56 | - |
| | 60 | 94 | 84 | 77 | 71 | 67 | - | - | - | 107 | 96 | 88 | 82 | 77 | 69 | - | - |
| | 66 | 94 | 84 | 77 | 71 | 67 | - | - | - | 107 | 96 | 88 | 82 | 77 | 69 | - | - |
| | 69 | 94 | 84 | 77 | 71 | - | - | - | - | 107 | 96 | 88 | 82 | 77 | - | - | - |
| 190 | 24 | 102 | 92 | 84 | 78 | 73 | 66 | 47 | 41 | 116 | 105 | 96 | 89 | 83 | 75 | 62 | 47 |
| | 36 | 103 | 93 | 85 | 69 | 65 | 58 | 47 | 41 | 116 | 106 | 97 | 90 | 84 | 67 | 55 | 47 |
| | 48 | 92 | 82 | 75 | 69 | 65 | 58 | - | - | 118 | 94 | 86 | 80 | 75 | 67 | 55 | - |
| | 54 | 92 | 82 | 75 | 69 | 65 | 58 | - | - | 105 | 94 | 86 | 80 | 75 | 67 | 55 | - |
| | 60 | 92 | 82 | 75 | 69 | 65 | - | - | - | 105 | 94 | 86 | 80 | 75 | 67 | - | - |
| | 66 | 92 | 82 | 75 | 69 | - | - | - | - | 105 | 94 | 86 | 80 | 75 | 67 | - | - |
| | 68 | 92 | 82 | 75 | 69 | - | - | - | - | 105 | 94 | 86 | 80 | 75 | - | - | - |
| 200 | 24 | 99 | 89 | 82 | 76 | 71 | 64 | 46 | 40 | 114 | 102 | 93 | 87 | 81 | 73 | 60 | 46 |
| | 30 | 99 | 90 | 83 | 76 | 71 | 57 | 46 | 40 | 114 | 102 | 93 | 88 | 82 | 74 | 53 | 46 |
| | 36 | 101 | 90 | 83 | 68 | 63 | 57 | 46 | 40 | 114 | 103 | 94 | 88 | 82 | 65 | 53 | 46 |
| | 42 | 101 | 80 | 73 | 68 | 63 | 57 | 46 | - | 115 | 103 | 94 | 78 | 73 | 65 | 53 | 46 |
| | 48 | 89 | 80 | 73 | 68 | 63 | 57 | - | - | 115 | 92 | 84 | 78 | 73 | 65 | 53 | - |
| | 54 | 89 | 80 | 73 | 68 | 63 | 57 | - | - | 102 | 92 | 84 | 78 | 73 | 65 | - | - |
| | 68 | 89 | 80 | 73 | 68 | - | - | - | - | 102 | 92 | 84 | 78 | 73 | - | - | - |
| 210 | 24 | 97 | 87 | 80 | 74 | 70 | 62 | 45 | 39 | 111 | 100 | 91 | 85 | 79 | 72 | 59 | 45 |
| | 30 | 97 | 88 | 81 | 75 | 70 | 53 | 45 | 39 | 111 | 100 | 91 | 86 | 80 | 72 | 52 | 45 |
| | 36 | 98 | 88 | 71 | 66 | 62 | 55 | 45 | 39 | 111 | 101 | 92 | 86 | 71 | 64 | 52 | 45 |
| | 42 | 98 | 78 | 71 | 66 | 62 | 55 | 45 | - | 112 | 101 | 82 | 76 | 71 | 64 | 52 | 45 |
| | 48 | 87 | 78 | 71 | 66 | 62 | 55 | - | - | 112 | 89 | 82 | 76 | 71 | 64 | 52 | - |
| | 54 | 87 | 78 | 71 | 66 | 62 | 55 | - | - | 100 | 89 | 82 | 76 | 71 | 64 | - | - |
| | 67 | 87 | 78 | 71 | - | - | - | - | - | 100 | 89 | 82 | 76 | 71 | - | - | - |
| 220 | 24 | 95 | 85 | 78 | 72 | 68 | 61 | 44 | 38 | 108 | 97 | 89 | 83 | 78 | 70 | 57 | 44 |
| | 30 | 95 | 86 | 79 | 73 | 68 | 54 | 44 | 38 | 108 | 97 | 89 | 84 | 78 | 70 | 51 | 44 |
| | 36 | 96 | 86 | 70 | 64 | 60 | 54 | 44 | 38 | 108 | 98 | 90 | 84 | 69 | 62 | 51 | 44 |
| | 42 | 96 | 76 | 70 | 64 | 60 | 54 | 44 | - | 110 | 98 | 80 | 74 | 69 | 62 | 51 | 44 |
| | 48 | 85 | 76 | 70 | 64 | 60 | 54 | - | - | 110 | 87 | 80 | 74 | 69 | 62 | 51 | - |
| | 54 | 85 | 76 | 70 | 64 | 60 | - | - | - | 97 | 87 | 80 | 74 | 69 | 62 | - | - |
| | 66 | 85 | 76 | 70 | - | - | - | - | - | 97 | 87 | 80 | 74 | 69 | - | - | - |
| 230 | 24 | 93 | 83 | 76 | 71 | 67 | 60 | 43 | 37 | 106 | 95 | 87 | 81 | 76 | 69 | 56 | 43 |
| | 30 | 93 | 84 | 77 | 71 | 59 | 53 | 43 | 37 | 106 | 95 | 88 | 82 | 77 | 69 | 50 | 43 |
| | 36 | 94 | 84 | 68 | 63 | 59 | 53 | 43 | 37 | 107 | 96 | 88 | 82 | 68 | 61 | 50 | 43 |
| | 42 | 83 | 75 | 68 | 63 | 59 | 53 | 43 | - | 107 | 96 | 78 | 73 | 68 | 61 | 50 | 43 |
| | 48 | 83 | 75 | 68 | 63 | 59 | 53 | - | - | 95 | 86 | 78 | 73 | 68 | 61 | 50 | - |
| | 54 | 83 | 75 | 68 | 63 | 59 | - | - | - | 95 | 86 | 78 | 73 | 68 | 61 | - | - |
| | 65 | 83 | 75 | 68 | - | - | - | - | - | 95 | 86 | 78 | 73 | 68 | - | - | - |

| NEGATIVE DESIGN LOAD (P.S.F.) | MAXIMUM SLAT SPAN USED (IN) | (13) 2" x 7" STORM BAR HEIGHT | | | | | | | | (14) 2" x 9" STORM BAR HEIGHT | | | | | | | |
|---|---|---|---|---|---|---|---|---|---|---|---|---|---|---|---|---|---|
| | | 48 | 60 | 72 | 84 | 96 | 120 | 180 | 240 | 48 | 60 | 72 | 84 | 96 | 120 | 180 | 240 |
| 140 | 24 | 151 | 136 | 124 | 115 | 108 | 97 | 80 | 70 | 152 | 136 | 124 | 115 | 107 | 96 | 78 | 69 |
| | 36 | 151 | 136 | 124 | 115 | 108 | 98 | 72 | 62 | 152 | 136 | 124 | 115 | 108 | 97 | 79 | 61 |
| | 48 | 151 | 137 | 126 | 117 | 109 | 87 | 72 | 62 | 152 | 137 | 125 | 116 | 108 | 86 | 70 | 61 |
| | 54 | 153 | 137 | 126 | 104 | 97 | 87 | 72 | 62 | 153 | 137 | 125 | 103 | 96 | 86 | 70 | 61 |
| | 60 | 153 | 137 | 112 | 104 | 97 | 87 | 72 | 62 | 153 | 137 | 111 | 103 | 96 | 86 | 70 | 61 |
| | 66 | 153 | 122 | 112 | 104 | 97 | 87 | 72 | - | 153 | 121 | 111 | 103 | 96 | 86 | 70 | - |
| | 74 | 136 | 122 | 112 | 104 | 97 | 87 | - | - | 136 | 121 | 111 | 103 | 96 | 86 | - | - |
| 150 | 24 | 146 | 131 | 120 | 112 | 105 | 94 | 77 | 68 | 147 | 131 | 120 | 111 | 104 | 93 | 76 | 66 |
| | 36 | 146 | 131 | 120 | 112 | 106 | 95 | 69 | 60 | 147 | 131 | 120 | 111 | 105 | 94 | 68 | 59 |
| | 48 | 146 | 133 | 122 | 113 | 94 | 84 | 69 | 60 | 147 | 133 | 121 | 112 | 105 | 83 | 68 | 59 |
| | 54 | 148 | 133 | 122 | 100 | 94 | 84 | 69 | 60 | 148 | 133 | 121 | 99 | 93 | 83 | 68 | 59 |
| | 60 | 148 | 118 | 108 | 100 | 94 | 84 | 69 | 60 | 148 | 133 | 107 | 99 | 93 | 83 | 68 | - |
| | 66 | 148 | 118 | 108 | 100 | 94 | 84 | 69 | - | 148 | 117 | 107 | 99 | 93 | 83 | 68 | - |
| | 73 | 131 | 118 | 108 | 100 | 94 | 84 | - | - | 131 | 117 | 107 | 99 | 93 | 83 | - | - |
| 160 | 24 | 142 | 127 | 117 | 108 | 101 | 91 | 75 | 66 | 142 | 127 | 116 | 107 | 100 | 90 | 73 | 64 |
| | 36 | 142 | 127 | 117 | 108 | 103 | 92 | 67 | 58 | 142 | 127 | 116 | 107 | 101 | 91 | 66 | 57 |
| | 48 | 143 | 129 | 118 | 109 | 91 | 82 | 67 | 58 | 143 | 128 | 117 | 108 | 90 | 80 | 66 | 57 |
| | 54 | 143 | 129 | 105 | 97 | 91 | 82 | 67 | 58 | 143 | 128 | 117 | 96 | 90 | 80 | 66 | 57 |
| | 60 | 143 | 114 | 105 | 97 | 91 | 82 | 67 | - | 143 | 113 | 104 | 96 | 90 | 80 | 66 | - |
| | 66 | 127 | 114 | 105 | 97 | 91 | 82 | 67 | - | 143 | 113 | 104 | 96 | 90 | 80 | - | - |
| | 71 | 127 | 114 | 105 | 97 | 91 | 82 | - | - | 127 | 113 | 104 | 96 | 90 | 80 | - | - |
| 170 | 24 | 138 | 124 | 113 | 105 | 99 | 88 | 73 | 64 | 138 | 123 | 112 | 104 | 97 | 87 | 72 | 62 |
| | 36 | 138 | 124 | 113 | 106 | 100 | 89 | 65 | 56 | 138 | 123 | 112 | 105 | 98 | 88 | 64 | 55 |
| | 48 | 139 | 125 | 114 | 94 | 88 | 79 | 65 | 56 | 139 | 124 | 114 | 105 | 87 | 78 | 64 | 55 |
| | 54 | 139 | 125 | 102 | 94 | 88 | 79 | 65 | 56 | 139 | 124 | 101 | 93 | 87 | 78 | 64 | 55 |
| | 60 | 139 | 111 | 102 | 94 | 88 | 79 | 65 | - | 139 | 110 | 101 | 93 | 87 | 78 | 64 | - |
| | 66 | 124 | 111 | 102 | 94 | 88 | 79 | - | - | 123 | 110 | 101 | 93 | 87 | 78 | - | - |
| | 70 | 124 | 111 | 102 | 94 | 88 | 79 | - | - | 123 | 110 | 101 | 93 | 87 | 78 | - | - |
| 180 | 24 | 134 | 120 | 110 | 102 | 96 | 86 | 71 | 62 | 134 | 120 | 109 | 101 | 95 | 85 | 70 | 60 |
| | 36 | 134 | 120 | 110 | 103 | 97 | 87 | 63 | 55 | 134 | 120 | 109 | 102 | 96 | 86 | 62 | 53 |
| | 48 | 135 | 122 | 111 | 92 | 86 | 77 | 63 | 55 | 135 | 121 | 110 | 90 | 85 | 76 | 62 | 53 |
| | 54 | 135 | 122 | 99 | 92 | 86 | 77 | 63 | 55 | 135 | 121 | 98 | 90 | 85 | 76 | 62 | - |
| | 60 | 135 | 108 | 99 | 92 | 86 | 77 | 63 | - | 135 | 107 | 98 | 90 | 85 | 76 | 62 | - |
| | 66 | 120 | 108 | 99 | 92 | 86 | 77 | - | - | 120 | 107 | 98 | 90 | 85 | 76 | - | - |
| | 69 | 120 | 108 | 99 | 92 | 86 | 77 | - | - | 120 | 107 | 98 | 90 | 85 | 76 | - | - |
| 190 | 24 | 130 | 117 | 107 | 100 | 93 | 84 | 70 | 60 | 130 | 116 | 106 | 98 | 92 | 82 | 68 | 59 |
| | 36 | 130 | 117 | 109 | 101 | 94 | 85 | 62 | 53 | 130 | 116 | 107 | 100 | 93 | 83 | 60 | 52 |
| | 48 | 132 | 118 | 108 | 89 | 84 | 75 | 62 | 53 | 132 | 118 | 107 | 88 | 82 | 74 | 60 | 52 |
| | 54 | 132 | 105 | 96 | 89 | 84 | 75 | 62 | - | 132 | 118 | 95 | 88 | 82 | 74 | 60 | - |
| | 60 | 117 | 105 | 96 | 89 | 84 | 75 | 62 | - | 132 | 104 | 95 | 88 | 82 | 74 | 60 | - |
| | 66 | 117 | 105 | 96 | 89 | 84 | 75 | - | - | 116 | 104 | 95 | 88 | 82 | 74 | - | - |
| | 68 | 117 | 105 | 96 | 89 | 84 | 75 | - | - | 116 | 104 | 95 | 88 | 82 | 74 | - | - |
| 200 | 24 | 127 | 114 | 105 | 97 | 91 | 82 | 68 | 59 | 127 | 113 | 104 | 96 | 90 | 80 | 66 | 57 |
| | 30 | 127 | 114 | 105 | 97 | 91 | 83 | 68 | 52 | 127 | 113 | 104 | 96 | 91 | 81 | 66 | 51 |
| | 36 | 127 | 114 | 106 | 98 | 92 | 83 | 60 | 52 | 127 | 113 | 105 | 97 | 91 | 81 | 59 | 51 |
| | 42 | 127 | 116 | 106 | 98 | 82 | 73 | 60 | 52 | 127 | 115 | 105 | 97 | 91 | 72 | 59 | 51 |
| | 48 | 129 | 116 | 94 | 87 | 82 | 73 | 60 | 52 | 128 | 115 | 105 | 86 | 80 | 72 | 59 | 51 |
| | 54 | 129 | 103 | 94 | 87 | 82 | 73 | 60 | - | 128 | 102 | 93 | 86 | 80 | 72 | 59 | - |
| | 68 | 114 | 103 | 94 | 87 | 82 | 73 | - | - | 113 | 102 | 93 | 86 | 80 | 72 | - | - |
| 210 | 24 | 124 | 112 | 102 | 95 | 89 | 80 | 66 | 57 | 124 | 111 | 101 | 94 | 88 | 78 | 65 | 56 |
| | 30 | 124 | 112 | 102 | 95 | 90 | 81 | 59 | 51 | 124 | 111 | 101 | 94 | 89 | 79 | 65 | 50 |
| | 36 | 124 | 112 | 103 | 96 | 90 | 72 | 59 | 51 | 124 | 111 | 102 | 95 | 89 | 79 | 57 | 50 |
| | 42 | 126 | 113 | 103 | 96 | 80 | 72 | 59 | 51 | 125 | 112 | 102 | 95 | 78 | 70 | 57 | 50 |
| | 48 | 126 | 113 | 92 | 85 | 80 | 72 | 59 | 51 | 125 | 112 | 90 | 84 | 78 | 70 | 57 | 50 |
| | 54 | 126 | 100 | 92 | 85 | 80 | 72 | 59 | - | 125 | 99 | 90 | 84 | 78 | 70 | 57 | - |
| | 67 | 112 | 100 | 92 | 85 | 80 | 72 | - | - | 111 | 99 | 90 | 84 | 78 | 70 | - | - |
| 220 | 24 | 122 | 109 | 100 | 93 | 87 | 78 | 65 | 56 | 121 | 108 | 99 | 91 | 86 | 77 | 63 | 55 |
| | 30 | 122 | 109 | 100 | 93 | 88 | 79 | 57 | 50 | 121 | 108 | 99 | 91 | 87 | 77 | 56 | 48 |
| | 36 | 122 | 109 | 101 | 94 | 88 | 70 | 57 | 50 | 121 | 108 | 100 | 92 | 87 | 68 | 56 | 48 |
| | 42 | 123 | 110 | 101 | 83 | 78 | 70 | 57 | 50 | 122 | 109 | 100 | 92 | 77 | 68 | 56 | 48 |
| | 48 | 123 | 110 | 90 | 83 | 78 | 70 | 57 | 50 | 122 | 109 | 88 | 82 | 77 | 68 | 56 | 48 |
| | 54 | 123 | 98 | 90 | 83 | 78 | 70 | 57 | - | 122 | 97 | 88 | 82 | 77 | 68 | 56 | - |
| | 66 | 109 | 98 | 90 | 83 | 78 | 70 | - | - | 108 | 97 | 88 | 82 | 77 | 68 | - | - |
| 230 | 24 | 119 | 107 | 98 | 91 | 85 | 76 | 63 | 55 | 118 | 106 | 97 | 89 | 84 | 75 | 62 | 54 |
| | 30 | 119 | 107 | 98 | 91 | 86 | 77 | 56 | 48 | 118 | 106 | 97 | 89 | 85 | 76 | 55 | 47 |
| | 36 | 119 | 108 | 99 | 92 | 86 | 69 | 56 | 48 | 118 | 107 | 98 | 90 | 85 | 67 | 55 | 47 |
| | 42 | 120 | 108 | 99 | 82 | 76 | 69 | 56 | 48 | 120 | 107 | 98 | 80 | 75 | 67 | 55 | 47 |
| | 48 | 120 | 108 | 88 | 82 | 76 | 69 | 56 | 48 | 120 | 107 | 86 | 80 | 75 | 67 | 55 | - |
| | 54 | 107 | 96 | 88 | 82 | 76 | 69 | 56 | - | 120 | 95 | 86 | 80 | 75 | 67 | 55 | - |
| | 65 | 107 | 96 | 88 | 82 | 76 | 69 | - | - | 106 | 95 | 86 | 80 | 75 | 67 | 55 | - |

NOTE: INTERPOLATE FOR HEADER SPANS AND REACTIONS BETWEEN THOSE SHOWN ON THIS SHEET.
FOR HEADER REACTION DETERMINATION AND END CONNECTION DETAILS/ANCHORS, SEE SCHEDULE E, SHEET 5 OF 10.

PRODUCT RENEWED
ACCEPTANCE No. 98-1214.09
EXPIRATION DATE December 08-01
By Manuel Perez
PRODUCT CONTROL DIVISION
BUILDING CODE COMPLIANCE OFFICE

PRODUCT RENEWED
ACCEPTANCE No. 01-0126.01
EXPIRATION DATE 02/06/2006
By Manuel Perez
PRODUCT CONTROL DIVISION
BUILDING CODE COMPLIANCE OFFICE

APPROVED AS COMPLYING WITH THE
SOUTH FLORIDA BUILDING CODE
DATE FEBRUARY 8 1996
BY Manuel Perez
PRODUCT CONTROL DIVISION
BUILDING CODE COMPLIANCE OFFICE
ACCEPTANCE NO. 95-0908.07


KNEZEVICH & ASSOCIATES, INC.
CONSULTING ENGINEERS & PRODUCT TESTING
641 MOKENA DRIVE
MIAMI SPRINGS, FLORIDA, 33166
PHONE (305) 883-9571


COPYRIGHT 1995 KNEZEVICH & ASSOCIATES, INC.


SUPER ROLL-UP SHUTTER

HURST AWNING CO., INC.
5795 N.W. 36TH AVE.
MIAMI, FL. 33142
(305) 635-0900

| revisions | | | |
|---|---|---|---|
| no | date | by | description |
| 1 | 11/30/95 | | COUNTY COMMENTS |

V.J. KNEZEVICH
PROFESSIONAL ENGINEER
Fl. License No. PE 0010983

DEC - 6 1995

| | |
|---|---|
| date 6-12-95 | |
| scale AS NOTED | drawn by J.V. HILL |
| design by VJK | checked by VJK |
| drawing no. 95-187 | |
| sheet 10 of 10 | |