MIAMI-DADE COUNTY, FLORIDA
METRO-DADE FLAGLER BUILDING

BUILDING CODE COMPLIANCE OFFICE
METRO-DADE FLAGLER BUILDING
140 WEST FLAGLER STREET, SUITE 1603
MIAMI, FLORIDA 33130-1563
(305) 375-2901 FAX (305) 375-2908

CONTRACTOR LICENSING SECTION
(305) 375-2527 FAX (305) 375-2558

CONTRACTOR ENFORCEMENT DIVISION
(305) 375-2966 FAX (305) 375-2908

PRODUCT CONTROL DIVISION
(305) 375-2902 FAX (305) 372-6339

PRODUCT CONTROL NOTICE OF ACCEPTANCE

Best Rolling Doors, Inc.
9625 NW 80TH AVENUE
Hialeah Gardens ,FL 33016-2313

Your application for Notice of Acceptance (NOA) of:
14' Steel Roll-Up Door
under Chapter 8 of the Code of Miami-Dade County governing the use of Alternate Materials and Types of Construction, and completely described herein, has been recommended for acceptance by the Miami-Dade County Building Code Compliance Office (BCCO) under the conditions specified herein.

This NOA shall not be valid after the expiration date stated below. BCCO reserves the right to secure this product or material at any time from a jobsite or manufacturer's plant for quality control testing. If this product or material fails to perform in the approved manner, BCCO may revoke, modify, or suspend the use of such product or material immediately. BCCO reserves the right to revoke this approval, if it is determined by BCCO that this product or material fails to meet the requirements of the South Florida Building Code.

The expense of such testing will be incurred by the manufacturer.

ACCEPTANCE NO.: 01-0129.04
EXPIRES: 03/22/2006

Raul Rodriguez
Chief Product Control Division

THIS IS THE COVERSHEET, SEE ADDITIONAL PAGES FOR SPECIFIC AND GENERAL CONDITIONS
BUILDING CODE & PRODUCT REVIEW COMMITTEE

This application for Product Approval has been reviewed by the BCCO and approved by the Building Code and Product Review Committee to be used in Miami-Dade County, Florida under the conditions set forth above.

Francisco J. Quintana, R.A.
Director
Miami-Dade County
Building Code Compliance Office

APPROVED: 03/22/2001

NOTICE OF ACCEPTANCE: SPECIFIC CONDITIONS

1.0 SCOPE:

1.1 This approves a roll up door with maximum dimensions of 14'-0" wide x 24'-0" high as described in section 2 of this Notice of Acceptance. It is designed to comply with the South Florida Building Code, 1994 edition for Miami-Dace County (S.F.B.C.). For the locations where the pressure requirements, as determined by the S.F.B.C. chapter 23, do not exceed the design pressure rating values indicated on the approved drawings.

2.0 PRODUCT DESCRIPTION:

2.1 The **Best Roll–Up 14'-0" Wide Door** and its components shall be built in strict compliance with the following documents: Drawing No.97-192, prepared by Tilteco, Inc., dated 07/07/97, with latest revision on 01/23/01. The drawing shall bear the Miami-Dade County Product Control approval stamp with the Notice of Acceptance number and approval date by the Miami Dade Product Control Division. These documents shall hereinafter be referred to as the approved drawings.

3.0 LIMITATION:

3.1 Units with dimensions equal to or smaller than those shown on the approved drawing shall qualify under this approval.

3.2 This approval requires the manufacturer to do testing of all coils used to fabricate door slats under this Notice of Acceptance. A minimum of 2 specimens shall be cut from each coil and tensile tested according to ASTM E-8 by a Dade County Certified Laboratory selected and paid by the manufacturer. Every 3 months, 4 times a year the manufacturer shall mail to this office a copy of the Test Reports with confirmation that the specimens were selected from coils at the manufacturer's production facilities. And a notarized statement from the manufacturer that only coils with yield strength of 46.7 ksi or more shall be used to make door panels for Dade county under this Notice of Acceptance.

4.0 INSTALLATION:

4.1 The Roll-Up Door and its components shall be installed in strict compliance with the approved drawings.

4.2 The installation of this door does **not require** a hurricane protection system.

5.0 LABELLING

5.1 Each door shall bear a permanent label with the manufacturer's name or logo, city, state and the following statement "Miami Dade County Product Control Approved"

6.0 BUILDING PERMIT REQUIREMENTS.

6.1 Application for Building Permit shall be accompanied by copies of the following:

6.1.1 This Notice of Acceptance including duplicate copies of the approved drawings identified in section 2. Clearly marked to show the components selected for the proposed installation.

6.1.3 Any other document required by the building Official or the S.F.B.C. in order to properly evaluate the installation of this system.

Candido Font, PE, Sr. Product Control Examiner
Product Control Division

Best Rolling Doors, Inc.

ACCEPTANCE NO. : 01-0129.04

APPROVED: MAR 2 2 2001

EXPIRES : MAR 2 2 2006

NOTICE OF ACCEPTANCE STANDARD CONDITIONS

1. Renewal of this Acceptance (approval) shall be considered after a renewal application has been filed and the original submitted documentation, including test supporting data, engineering documents, are no older than eight (8) years.

2. Any and all approved products shall be permanently labeled with the manufacturer's name, city, state and the following statement: "Dade County Product Control Approved", or as specifically stated in the specific conditions of this Acceptance.

3. Renewals of Acceptance will not be considered if:
   a) There has been a change in the South Florida Building Code affecting the evaluation of this product and the product is not in compliance with the code changes;
   b) The product is no longer the same product (identical) as the one originally approved;
   c) If the Acceptance holder has not complied with all the requirements of this acceptance, including the correct installation of the product;
   d) The engineer, who originally prepared, signed and sealed the required documentation initially submitted, is no longer practicing the engineering professions.

4. Any revision or change in the materials, use, and/or manufacture of the product or process shall automatically be cause for termination of this Acceptance, unless prior written approval has been requested (through the filing of a revision application with appropriate fee) and granted by this office.

5. Any of the following shall also be grounds for removal of this Acceptance:
   a) Unsatisfactory performance of this product or process;
   b) Misuse of this Acceptance as an endorsement of any product, for sales, advertising or any other purpose.

6. The Notice of Acceptance number preceded by the words Miami-Dade County, Florida, and followed by the expiration date may be displayed in advertising literature. If any portion of the Notice of Acceptance is displayed, then it shall be done in its entirety.

7. A copy of this Acceptance as well as approved drawings and other documents, where it applies, shall be provided to the user by the manufacturer or its distributors and shall be available for inspection at the job site at all times. The engineer need not reseal the copies.

8. Failure to comply with any section of this Acceptance shall be cause for termination and removal of Acceptance.

9. This Acceptance contains pages 1, 2 and this last page 3.

Candido Font, PE, Sr. Product Control Examiner
Product Control Division

END OF THIS ACCEPTANCE

Best Rolling Doors, Inc.

ACCEPTANCE NO: 01-0129.04

APPROVED: MAR 2 2 2001

EXPIRES: MAR 2 2 2006

NOTICE OF ACCEPTANCE: EVIDENCE SUBMITTED

A DRAWINGS:

1. Drawing prepared by Tilteco, Inc., titled "Roll-Up Door", Drawing No.97-192, dated 07/07/97 with latest revision on 01/23/01, sheets 1 to 3 of 3, signed and sealed by W. A. Tillit Jr. PE.

B TEST:

1 Test report on Large Missile Impact Test and Cyclic Wind Pressure Test for a "14' x 8' Roll-Up Garage Door", prepared by Hurricane Engineering & Testing, Inc., Report No. HETI 97-624, dated 06/04/97, signed and sealed by H.M. Medina, PE.

2 Test report on Uniform Static Air Pressure Test & Forced Entry Resistance Test for a "14' x 8' Roll-Up Garage Door, " prepared by Hurricane Engineering & Testing, Inc., Report No. HETI 97-637, dated 06/11/97, signed and sealed by H. M. Medina, PE.

C CALCULATIONS:

1 Calculations for Anchor Spacing , dated 07/31/97, sheets 1 through 10 of 10, signed and sealed by W. A. Tillit Jr, PE.

D STATEMENTS:

1 Code compliance letter, issued by Tilteco, Inc. on 08/04/97, signed and sealed by W. A. Tillit Jr. PE.

2 No-financial interest letter, issued by Tilteco, Inc. on 08/04/97, signed and sealed by W. A. Tillit Jr. PE.

E MATERIAL CERTIFICATION:

1. Test report on Tensile Test for 22 GA Steel Roll-Up Garage Door, prepared by Hurricane Engineering & Testing, Inc., Report No. HETI 97-T50, dated 07/24/97, signed and sealed by H. M. Medina, PE.
2. Notice of Acceptance # 98-0904.04, issued to Apache Products Company, and expiring on 01/11/2002.

Candido Font, PE, Sr. Product Control Examiner
Product Control Division

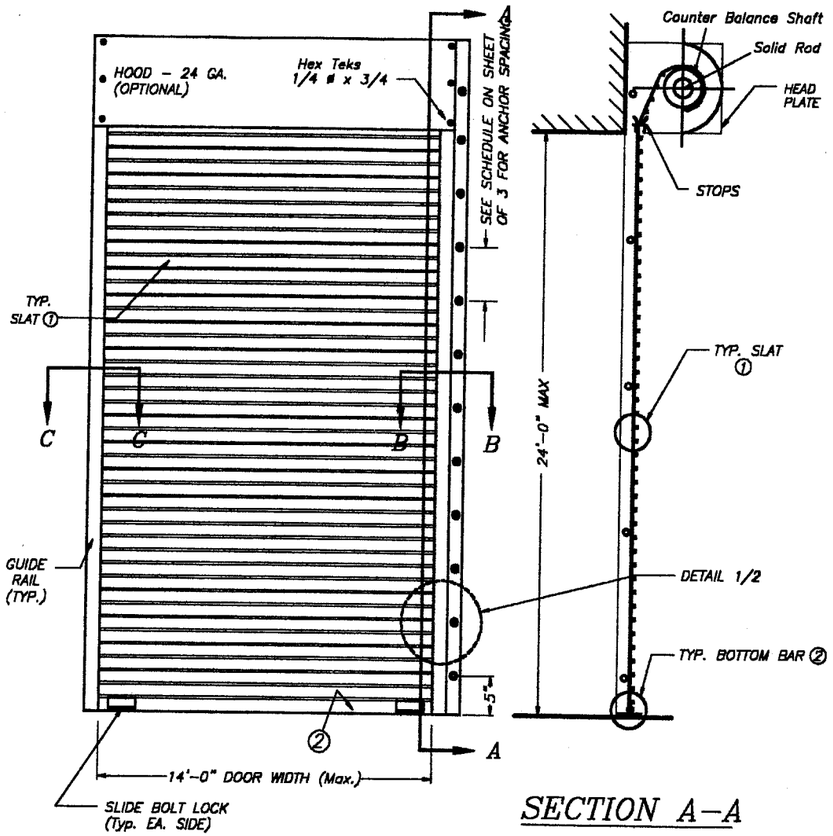

TYPICAL DOOR ELEVATION

N. T. S.

SECTION A–A

N. T. S.

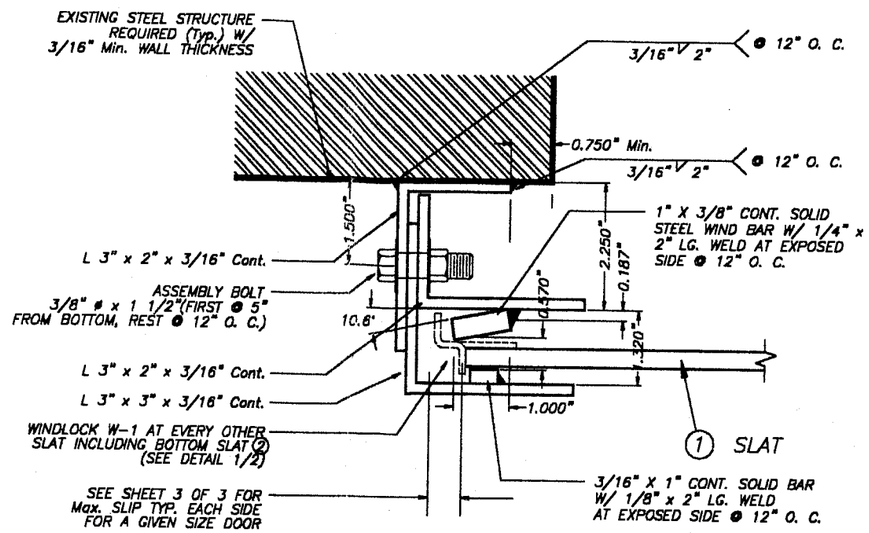

SECTIONS C–C

SCALE : 3/8" = 1"

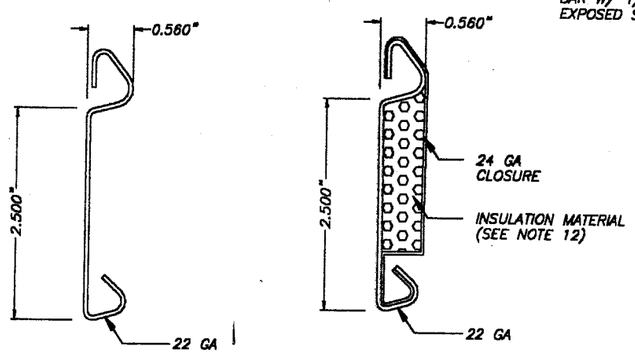

PLAIN

INSULATED

① FLAT SLAT

SCALE : 1/2" = 1"

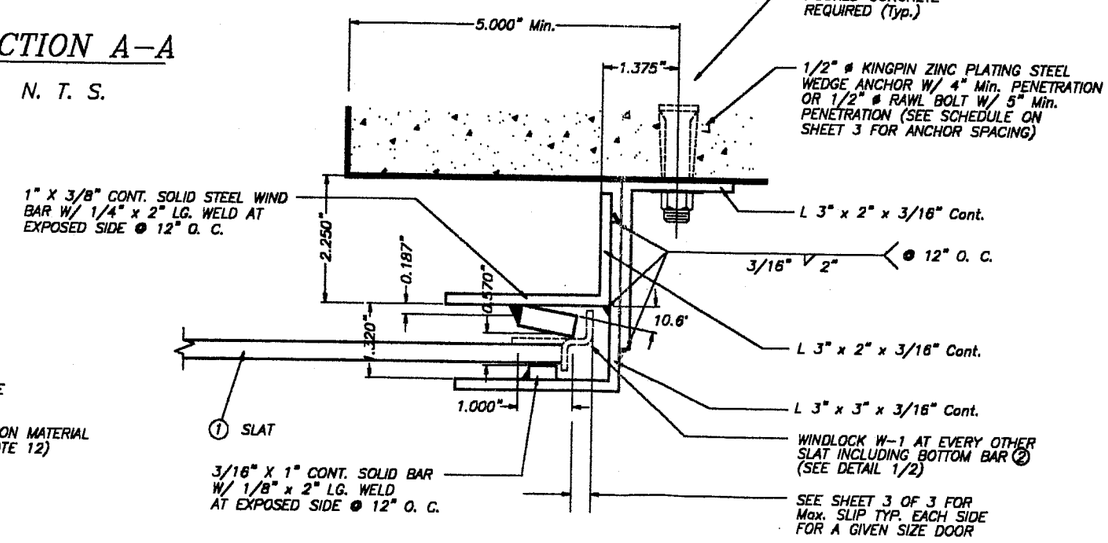

SECTIONS B–B

SCALE : 3/8" = 1"

1/22/01

GENERAL NOTES:

1– This door has been designed in accordance with the South Florida Building Code, 1994 edition.

2– Positive and negative design pressure calculations shall be performed in accordance with ASCE 7–88 "Minimum Design Loads for Building and Other Structures", w/ a minimum basic wind speed of 110 m.p.h.

3– The details and specifications shown herein represent the products tested for impact, cyclic and uniform static air pressure in conformance with Dade County protocols PA 201, 202, and 203 as per HETI report # 97–637 & 97–624 respectively, with design loads as follows:

–Positive Design Load 50.0 PSF
–Negative Design Load 50.0 PSF

4– Slat to be A.S.T.M. A–446 Gr C Structural quality steel with min Fy = 46.7 ksi and G–90 galvanizing per A.S.T.M. A–525, or A.I.S.I. 304 series stainless steel manufactured with a minimum yield strength of Fy = 46.7 ksi.

5– All steel angles & windlocks to be A.S.T.M. A–36 designation, shop primed against carrosion prior to installation.

6– All assembly bolts to be S.A.E. Grade 5 cadmium plated or galvanized steel.

7– Steel windbars to be A.S.T.M. A–36 designation, shop primed prior to installation.

8– Hood to be 24 Ga. A.S.T.M. A–525 designation G–90 finish type coating.

9– All rivets to be A.I.S.I. 1035 Steel, Cadmium Plated, Stainless Steel or Zinc Plated w/ Fy= 37,000 psi

10– Concrete anchors to be as manufactured by U. S. Anchors Corporation or The Rawl Plug Company and shall be installed following all of the recommendations and specifications of the anchor's manufacturer.

11– All welding to conform to American Welding Society's latest edition's regulations, and the South Florida Building Code. Use A.W.S A5.1 or A5.5 E60xx electrodes min. 3/16" fillet size. USE CERTIFIED WELDERS.

12– Insulation material shall be EPS–Expanded Polystyrene Insulation manufactured by Apache Products Company w/ 1.07 Lb/ft3 density.

13– It shall be the responsibility of the contracor to verify that the existing structure is designed to support Vx and Vy forces at both jambs.
See sheet 3 of 3, Table 1 for Vx & Vy values.

14– Roll up mechanism not included in this approval.

APPROVED AS COMPLYING WITH THE SOUTH FLORIDA BUILDING CODE
DATE MAR 2 2 2001
BY
PRODUCT CONTROL DIVISION
BUILDING CODE COMPLIANCE OFFICE
ACCEPTANCE NO. 01-0129.04

01-0129.04

MIAMI–DADE COUNTY

TILLECO INC.
TILLIT TESTING & ENGINEERING COMPANY
8595 N.W. 36th. St., Ste. 217, VIRGINIA GARDENS, Fl. 33166
Phone : (305)871-1530 , Fax : (305)871-1531
EB-0006719
WALTER A. TILLIT Jr. P. E.
FLORIDA Lic. # 44167

ROLL–UP DOOR

BEST ROLLING DOORS, INC.
10034 N.W. 80 AVE.
MIAMI, FLORIDA 33106

REV. NO	DESCRIPTION	DATE	REV. No	DESCRIPTION	DATE
1	GENERAL	11/20/97	3		
2	NOTES+INSULATED SLAT	1/23/01	4		

SCALE –
DATE 7/7/97
DRAWING No 97 – 192
SHEET 1 OF 3

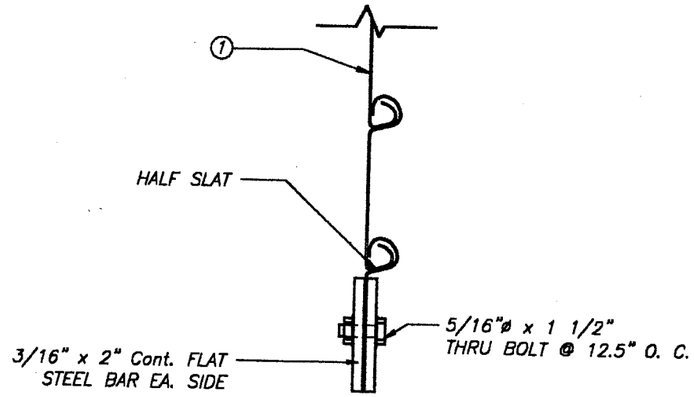

SECTION X1

② BOTTOM BAR DETAIL

SCALE : 3/8" = 1"

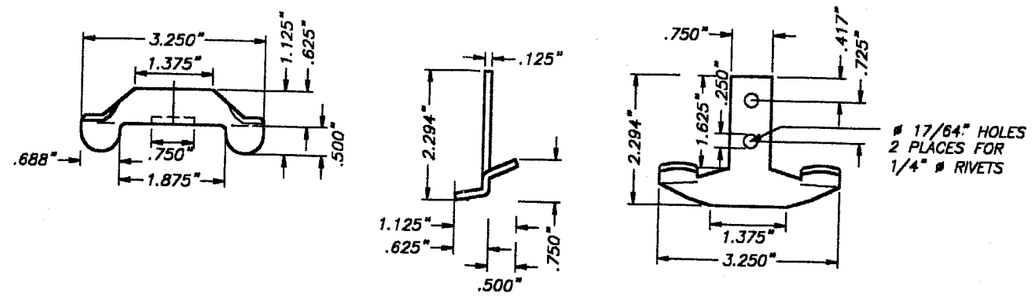

TYPICAL WINDLOCK W – 1 DETAIL

SCALE : 3/8" = 1"

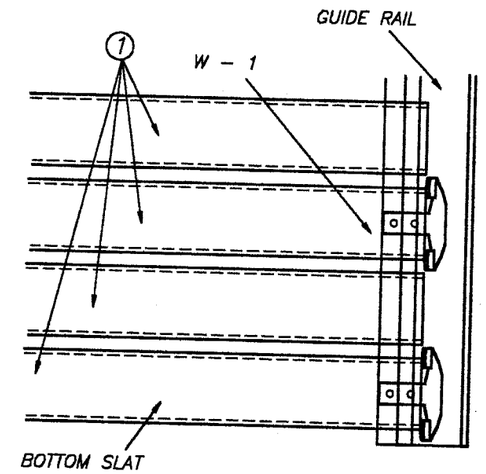

DETAIL 1 (elevation)

N. T. S.

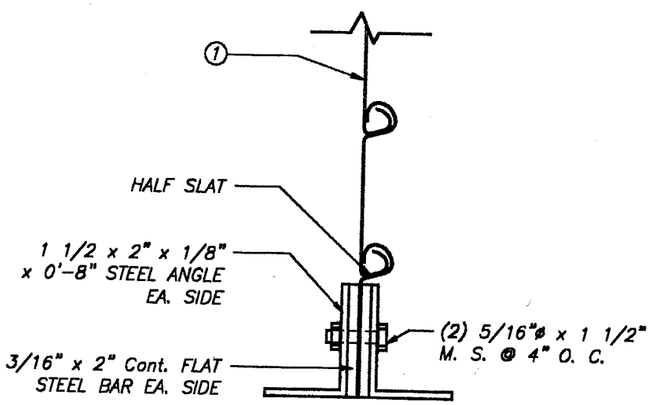

SECTION X2

BOTTOM BAR ② W/ BRACKET DETAIL

SCALE : 3/8" = 1"

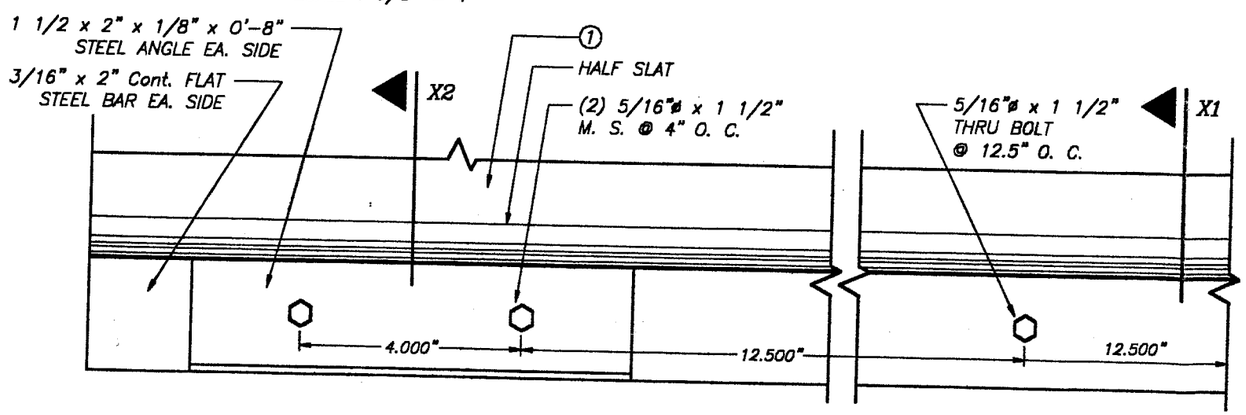

ELEVATION

BOTTOM BAR ② W/ BRACKET

SCALE : 3/8" = 1"

APPROVED AS COMPLYING WITH THE
SOUTH FLORIDA BUILDING CODE
DATE MAR 2 2 2001
BY
PRODUCT CONTROL DIVISION
BUILDING CODE COMPLIANCE OFFICE
ACCEPTANCE NO. 01-0129.04

MIAMI–DADE COUNTY

1/24/01

TILTECO INC.
TILLIT TESTING & ENGINEERING COMPANY
6595 N.W. 36th. St., Ste. 217, VIRGINIA GARDENS, FL 33166
Phone : (305)871-1530 . Fax : (305)871-1531
EB-0006719
WALTER A. TILLIT Jr. P. E.
FLORIDA Lic. # 44167

ROLL-UP DOOR

BEST ROLLING DOORS, INC.
10034 N.W. 80 AVE.
MIAMI, FLORIDA 33106

REV. NO	DESCRIPTION	DATE	REV. No	DESCRIPTION	DATE
1	GENERAL	11/20/97	3		
2	GENERAL	1/23/01	4		

AS SHOWN SCALE

7/7/97 DATE

97 – 192 DRAWING No

SHEET 2 OF 3

Vx & Vy REACTIONS & ANCHOR SCHEDULE

MAXIMUM DESIGN LOAD (PSF)	DOOR WIDTH (Ft.)	SLIP (In)	Vx (Lb/Ft)	Vy (Lb/Ft)	ANCHOR SPACING			
					FOR Min. f'c = 2000 psi CONCRETE		FOR Min. f'c = 4000 psi CONCRETE	
					TYPE 1 *	TYPE 2 **	TYPE 1 *	TYPE 2 **
+50.0, −50.0	12'−0"	5/16"	1513	300	4 1/2"	5 1/2"	6"	7"
	13'−0"	7/16"	1477	325	4 1/2"	5 1/2"	6"	7"
	14'−0"	9/16"	1492	350	4 1/2"	5 1/2"	6"	7"

* TYPE 1 ANCHOR : 1/2" ø KINGPIN ZINC PLATING W/ 4" MINIMUM EMBEDMENT.

** TYPE 2 ANCHOR : 1/2" ø RAWL BOLT W/ 5" MINIMUM EMBEDMENT.

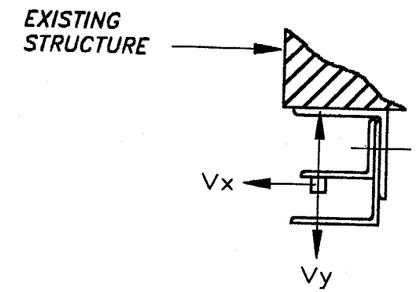

LOAD DIAGRAM

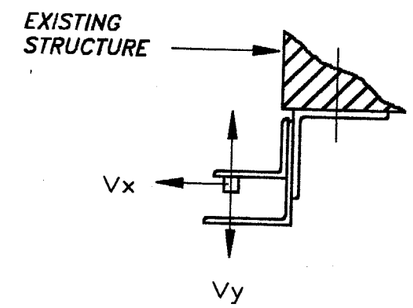

LOAD DIAGRAM

APPROVED AS COMPLYING WITH THE
SOUTH FLORIDA BUILDING CODE
DATE MAR 2 2 2001
BY
PRODUCT CONTROL DIVISION
BUILDING CODE COMPLIANCE OFFICE
ACCEPTANCE NO. 01-0129.04

1/24/01

MIAMI–DADE COUNTY

TILTECO INC.
TILLIT TESTING & ENGINEERING COMPANY
8585 N.W. 36th. St., Ste. 217, VIRGINIA GARDENS, FL 33166
Phone : (305)871-1530 . Fax : (305)871-1531
EB-0006719
WALTER A. TILLIT Jr. P. E.
FLORIDA Lic. # 44167

ROLL–UP DOOR

BEST ROLLING DOORS, INC.
10034 N.W. 80 AVE.
MIAMI, FLORIDA 33106

REV. NO	DESCRIPTION	DATE	REV. No	DESCRIPTION	DATE
1	GENERAL	11/20/97	3		
2	GENERAL	1/23/01	4		

SCALE –

DATE 7/7/97

DRAWING No 97 – 192

SHEET 3 OF 3