MIAMI-DADE

MIAMI-DADE COUNTY, FLORIDA
METRO-DADE FLAGLER BUILDING

BUILDING CODE COMPLIANCE OFFICE
METRO-DADE FLAGLER BUILDING
140 WEST FLAGLER STREET, SUITE 1603
MIAMI, FLORIDA 33130-1563
(305) 375-2901 FAX (305) 375-2908

CONTRACTOR LICENSING SECTION
(305) 375-2527 FAX (305) 375-2558

CONTRACTOR ENFORCEMENT DIVISION
(305) 375-2966 FAX (305) 375-2908

PRODUCT CONTROL DIVISION
(305) 375-2902 FAX (305) 372-6339

PRODUCT CONTROL NOTICE OF ACCEPTANCE

Binnings Pan American
3000 N.W. 125 Street
Miami ,FL 33167

Your application for Notice of Acceptance (NOA) of:
Series PA-25 Aluminum Horizontal Rolling Window - Non-Impact & Impact Resistant
under Chapter 8 of the Code of Miami-Dade County governing the use of Alternate Materials and Types of Construction, and completely described herein, has been recommended for acceptance by the Miami-Dade County Building Code Compliance Office (BCCO) under the conditions specified herein.

This NOA shall not be valid after the expiration date stated below. BCCO reserves the right to secure this product or material at any time from a jobsite or manufacturer's plant for quality control testing. If this product or material fails to perform in the approved manner, BCCO may revoke, modify, or suspend the use of such product or material immediately. BCCO reserves the right to revoke this approval, if it is determined by BCCO that this product or material fails to meet the requirements of the South Florida Building Code.

The expense of such testing will be incurred by the manufacturer.

ACCEPTANCE NO.: 01-0129.11
EXPIRES: 05/07/2006

Raul Rodriguez
Chief Product Control Division

THIS IS THE COVERSHEET, SEE ADDITIONAL PAGES FOR SPECIFIC AND GENERAL CONDITIONS
BUILDING CODE & PRODUCT REVIEW COMMITTEE

This application for Product Approval has been reviewed by the BCCO and approved by the Building Code and Product Review Committee to be used in Miami-Dade County, Florida under the conditions set forth above.

Francisco J. Quintana, R.A.
Director
Miami-Dade County
Building Code Compliance Office

APPROVED: 03/29/2001

Binnings Pan American

ACCEPTANCE No.: 01-0129.11

APPROVED : MAR 2 9 2001

EXPIRES : May 07, 2006

NOTICE OF ACCEPTANCE: SPECIFIC CONDITIONS

1. SCOPE

1.1 This **renews** the Notice of Acceptance No. 96-0212.01, which was issued on May 07, 1998. It approves an aluminum horizontal rolling window, as described in Section 2 of this Notice of Acceptance, designed to comply with the South Florida Building Code (SFBC), 1994 Edition for Miami-Dade County, for the locations where the pressure requirements, as determined by SFBC Chapter 23, do not exceed the Design Pressure Rating values indicated in the approved drawings.

2. PRODUCT DESCRIPTION

2.1 The **Series PA-25 - Aluminum Horizontal Rolling Window – Non-Impact and Impact Resistant** and its components shall be constructed in strict compliance with the following documents: Drawing No **PA-25DC**, titled "PA-25 XO/OX-XOX Horizontal Roller" Sheets 1 through 8 of 8 dated 10/7/97, revised on 3/12/98, 3/20/98 and 4/3/98, signed and sealed by Wm. M. Meyers, P.E., bearing the Miami-Dade County Product Control approval stamp with the Notice of Acceptance number and approval date by the Miami-Dade County Product Control Division. These documents shall hereinafter be referred to as the approved drawings.

3. LIMITATIONS

3.1 This approval applies to single unit applications only, as shown in approved drawings.

3.2 For Design Pressure Rating vs. Window Size, Configuration, Glazing Option and Reinforcement, see Comparative Analysis Tables in approved drawings.

4. INSTALLATION

4.1 The aluminum horizontal rolling window and its components shall be installed in strict compliance with the approved drawings.

4.2 Hurricane protective system (shutters): to determine whether the installation requires a hurricane protective system or not, see corresponding table in approved drawing.

5. LABELING

5.1 Each unit shall bear a permanent label with the manufacturer's name or logo, city, state and following statement: "Miami-Dade County Product Control Approved".

6. BUILDING PERMIT REQUIREMENTS

6.1 Application for building permit shall be accompanied by copies of the following:

6.1.1 This Notice of Acceptance

6.1.2 Duplicate copies of the approved drawings, as identified in Section 2 of this Notice of Acceptance, clearly marked to show the components selected for the proposed installation.

6.1.3 Any other documents required by the Building Official or the South Florida Building Code (SFBC) in order to properly evaluate the installation of this system.

Manuel Perez

Manuel Perez, P.E. Product Control Examiner
Product Control Division

Binnings Pan American

ACCEPTANCE No.: **01-0129.11**

APPROVED : MAR 2 9 2001

EXPIRES : **May 07, 2006**

NOTICE OF ACCEPTANCE STANDARD CONDITIONS

1. Renewal of this Acceptance (approval) shall be considered after a renewal application has been filed and the original submitted documentation, including test supporting data, engineering documents, are no older than eight (8) years.

2. Any and all approved products shall be permanently labeled with the manufacturer's name, city, state, and the following statement: "Miami-Dade County Product Control Approved", or as specifically stated in the specific conditions of this Acceptance.

3. Renewals of Acceptance will not be considered if:
   a) There has been a change in the South Florida Building Code affecting the evaluation of this product and the product is not in compliance with the code changes;
   b) The product is no longer the same product (identical) as the one originally approved;
   c) If the Acceptance holder has not complied with all the requirements of this acceptance, including the correct installation of the product;
   d) The engineer who originally prepared, signed and sealed the required documentation initially submitted is no longer practicing the engineering profession.

4. Any revision or change in the materials, use, and/or manufacture of the product or process shall automatically be cause for termination of this Acceptance, unless prior written approval has been requested (through the filing of a revision application with appropriate fee) and granted by this office.

5. Any of the following shall also be grounds for removal of this Acceptance:
   a) Unsatisfactory performance of this product or process.
   b) Misuse of this Acceptance as an endorsement of any product, for sales, advertising or any other purpose.

6. The Notice of Acceptance number preceded by the words Miami-Dade County, Florida, and followed by the expiration date may be displayed in advertising literature. If any portion of the Notice of Acceptance is displayed, then it shall be done in its entirety.

7. A copy of this Acceptance as well as approved drawings and other documents, where it applies, shall be provided to the user by the manufacturer or its distributors and shall be available for inspection at the job site at all time. The engineer need not reseal the copies.

8. Failure to comply with any section of this Acceptance shall be cause for termination and removal of Acceptance.

9. This Notice of Acceptance consists of pages 1, 2 and this last page 3.

Manuel Perez, P. E., Product Control Examiner
Product Control Division

END OF THIS ACCEPTANCE

Binnings Pan American

ACCEPTANCE No.: 01-0129.11

APPROVED : MAR 2 9 2001

EXPIRES : May 07, 2006

NOTICE OF ACCEPTANCE: EVIDENCE SUBMITTED
(For File ONLY. Not part of NOA.)

A. DRAWINGS

1. Manufacturer's die drawings and sections.
2. Drawing No **PA-25DC**, titled "PA-25 XO/OX-XOX Horizontal Roller" Sheets 1 through 8 of 8 dated 10/7/97, revised on 3/12/98, 3/20/98 and 4/3/98, signed and sealed by Wm. M. Meyers, P.E.,

B. TESTS

1. Test reports on 1 Large Missile Impact Test per SFBC, PA 201-94,
   2) Cyclic Wind Pressure Loading per SFBC, PA 203-94
   along with marked-up drawings and installation diagram of 3 specimens of XO aluminum horizontal sliding window (73" x 61"), prepared by American Test Lab of South Florida, Test Report No. **ATL-0721.01-96**, dated 11/11/96, signed and sealed by Gerard B. Sullivan, P.E.
2. Test reports on 1 Large Missile Impact Test per SFBC, PA 201-94,
   2) Cyclic Wind Pressure Loading per SFBC, PA 203-94
   along with marked-up drawings and installation diagram of 3 specimens of XOX aluminum horizontal sliding window (109" x 61"), prepared by American Test Lab of South Florida, Test Report No. **ATL-1108.01-96**, dated 11/12/96, signed and sealed by Gerard B. Sullivan, P.E.
3. Test reports on 1) Air Infiltration Test, per PA 202-94
   2) Uniform Static Air Pressure Test, Loading per PA 202-94
   3) Water Resistance Test, per PA 202-94
   4) Forced Entry Test, per SFBC 3603.2 (b) and PA 202-94
   along with marked-up drawings and installation diagram of 7 specimens of XOX and 4 specimens of OX aluminum horizontal sliding window (109" x 61" and 73-3/8" x 61" respectively), prepared by American Test Lab of South Florida, Test Report No. **ATL-0513.01-97**, dated 7/11/97, signed and sealed by Gerard B. Sullivan, P.E.
4. Test reports on 1) Air Infiltration Test, per PA 202-94
   2) Uniform Static Air Pressure Test, Loading per PA 202-94
   3) Water Resistance Test, per PA 202-94
   4) Forced Entry Test, per SFBC 3603.2 (b) and PA 202-94
   along with marked-up drawings and installation diagram of 3 specimen of XOX aluminum horizontal sliding window (109" x 63"), prepared by Fenestration Testing Laboratory, Inc., Test Report No. **FTL-1204**, dated 8/22/95, signed and sealed by Yamil G. Kuri, P.E.

Manuel Perez

Manuel Perez, P.E. Product Control Examiner
Product Control Division

NOTICE OF ACCEPTANCE: EVIDENCE SUBMITTED
(For File ONLY. Not part of NOA.)

5. Test reports on 1) Air Infiltration Test, per PA 202-94
   2) Uniform Static Air Pressure Test, Loading per PA 202-94
   3) Water Resistance Test, per PA 202-94
   4) Forced Entry Test, per SFBC 3603.2 (b) and PA 202-94

   along with marked-up drawings and installation diagram of 1 specimen of XOX aluminum horizontal sliding window (109" x 38-1/2""), prepared by Fenestration Testing Laboratory, Inc., Test Report No. **FTL-1270**, dated 9/7/95, signed and sealed by Yamil G. Kuri, P.E.

C. CALCULATIONS

1. Comparative analysis and anchor calculations, prepared by Robt. E. Fisher – Wm. M. Meyers, P.E. Consulting Engineers, dated 2/3/96, signed and sealed by William M. Meyers, P.E.

D. MATERIAL CERTIFICATIONS

1. None.

E. STATEMENTS

1. Statement letter of conformance, dated February 16, 1998, signed and sealed by William M. Meyers, P.E.
2. Statement letter of no financial interest, dated February 16, 1998, signed and sealed by William M. Meyers, P.E.

F. OTHER

1. Notice of Acceptance No. 96-0212.01, issued to Binnings Pan American for their PA-25 Aluminum Horizontal Roller Window - Impact, approved on 05/07/98 and expiring on 05/07/01.

Manuel Perez

Manuel Perez, P.E. Product Control Examiner
Product Control Division

VERTICAL SECTION BILL OF MATERIAL

PART NO.	ITEM	QUANTITY	EXTRUSION NUMBER	MACHINING NUMBER	MATERIAL	REMARKS
1	FRAME HEAD	1	20-04	20-04-2	6063 T-5	
2	FRAME SILL	1	25-01	25-01-1	6063 T-5	
3	VENT HEAD & SILL	2	20-07	20-07-2	6063 T-5	
4	TRACK INSERT	1	25-02	25-02-2	6063 T-5	
5	ROLLER (WHEEL)	2	25-5003		BRASS	
6	ROLLER PIN	2	25-5002		STEEL	
7	ROLLER HOUSING	2	25-5001		PLASTIC	
8	DUPONT SENTRYGLAS R-457	2				1/8" OR 3/16" ANNEALED
9	DOW 899 SILICONE	1	16-6000		6063 T-5	
10	WEEP BAFFLE	AS REQ'D	25-5004		NYLON	1 1/2" X 1/4" - 1 5/8" FROM EACH END
11	GLAZING BEAD	8	20-08	20-08-1	6063 T-5	
12	VENT ASSEMBLY SCREW	8			STEEL	#8 X 1" PPHSMS PILOT POINT
13	MEETING RAIL ASSEMBLY SCREW	4			STEEL	#8 X 1 1/2" PHPH
14	ULTRA FAB WHOOL PILE #3725G	AS REQ'D	4802100		FIN SEAL	TOP & BOTTOM RAIL
15	FLAP VINYL	AS REQ'D	18-2001		VINYL	
16	FALSE GRID FRAME	AS REQ'D	14-92	25-3073	6063 T-5	OPTIONAL
17	FALSE MUNTIN	AS REQ'D	14-88	25-3075	6063 T-5	OPTIONAL

PA-25 PRODUCT SUBMITTAL PACKAGE TABLE OF CONTENTS

DESCRIPTION	CONFIGURATION	VERTICAL SECTION	HORIZONTAL SECTION	DESIGN PRESSURE TABLE #	DESIGN PRESSURE SHEET #	FASTENERS
3/16" Tempered Glass	XO/OX	Sheet 1	Sheet 2	Table 1	Sheet 5	Sheet 4
3/16" Tempered Glass W/ Steel Rienforcement	XO/OX	Sheet 1	Sheet 2	Table 2	Sheet 5	Sheet 4
3/16" Annealed Glass (EGRESS)	XO/OX	Sheet 1	Sheet 2	Table 3	Sheet 5	Sheet 4
1/8" Tempered DuPont Sentryglas R-457	XO/OX	Sheet 1	Sheet 2	Table 4	Sheet 6	Sheet 4
3/16" Annealed DuPont Sentryglas R-457	XO/OX	Sheet 1	Sheet 2	Table 5	Sheet 6	Sheet 4
3/16" Tempered DuPont Sentryglas R-457	XO/OX	Sheet 1	Sheet 2	Table 6	Sheet 6	Sheet 4
1/8" Annealed Glass	XOX	Sheet 1	Sheet 2	Table 7	Sheet 7	Sheet 4
1/8" Tempered Glass	XOX	Sheet 1	Sheet 2	Table 8	Sheet 7	Sheet 4
3/16" Tempered Glass	XOX	Sheet 1	Sheet 2	Table 9	Sheet 7	Sheet 4
3/16" Tempered Glass W/ Steel Rienforcement	XOX	Sheet 1	Sheet 2	Table 10	Sheet 7	Sheet 4
3/16" Tempered Glass (EGRESS)	XOX	Sheet 1	Sheet 2	Table 11	Sheet 7	Sheet 4
1/8" Tempered DuPont Sentryglas R-457	XOX	Sheet 1	Sheet 2	Table 12	Sheet 8	Sheet 4
3/16" Annealed DuPont Sentryglas R-457	XOX	Sheet 1	Sheet 2	Table 13	Sheet 8	Sheet 4
3/16" Tempered DuPont Sentryglas R-457	XOX	Sheet 1	Sheet 2	Table 14	Sheet 8	Sheet 4

BUCK HEIGHT	DAYLIGHT OPENING VENT	DAYLIGHT OPENING FIXED	GLASS HEIGHT VENT	GLASS HEIGHT FIXED	SASH OPENING	FRAME O.S.M.
25	21 15/16	22 5/8	22 3/8	23 1/16	22 9/16	26
✡ 30	26 15/16	27 5/8	27 3/8	28 1/16	27 9/16	31
✡ 36	32 15/16	33 5/8	33 3/8	34 1/16	33 9/16	37
✡ 37 3/8	34 5/16	35	34 6/8	35 7/16	34 15/16	38 3/8
✡ 40	36 15/16	37 5/8	37 3/8	38 1/16	37 9/16	39 3/8
✡ 40	36 15/16	37 5/8	37 3/8	38 1/16	37 9/16	45
✡ 48	44 15/16	45 5/8	45 3/8	46 1/16	45 9/16	49
✡ 49 5/8	46 9/16	47 1/4	47	47 11/16	47 3/16	50 5/8
✡ 60	56 15/16	57 5/8	57 3/8	58 1/16	57 9/16	61

✡ These sizes meet the minimum egress height requirement. However, window heights must be matched to window widths to determine minimum clear opening.

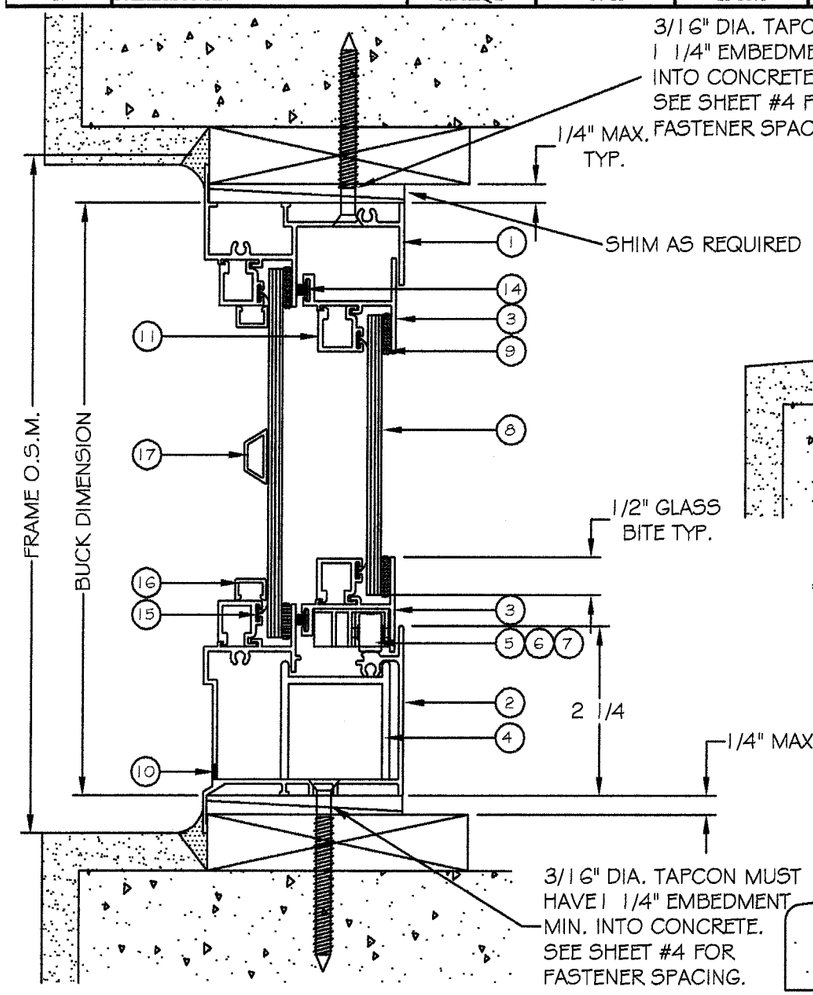

1/1 1 X WOOD BUCK INSTALLATION FOR XO/OX
1/2" SCALE

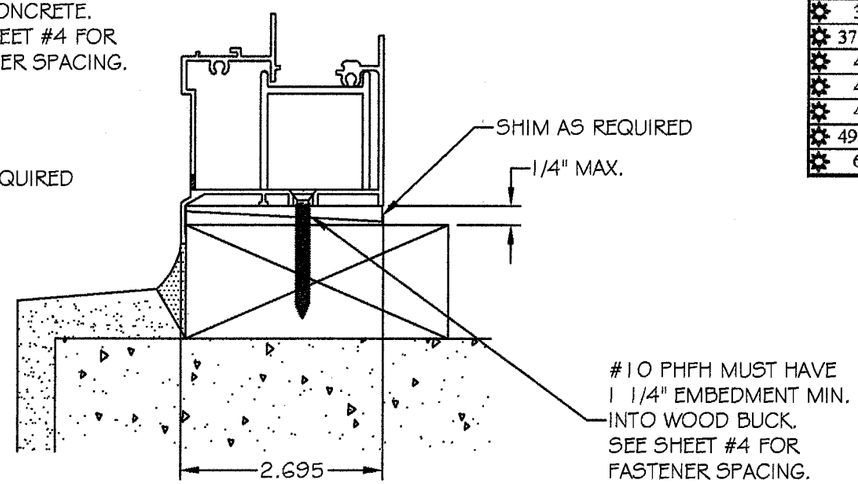

2 X WOOD BUCK INSTALLATION
1/2" SCALE

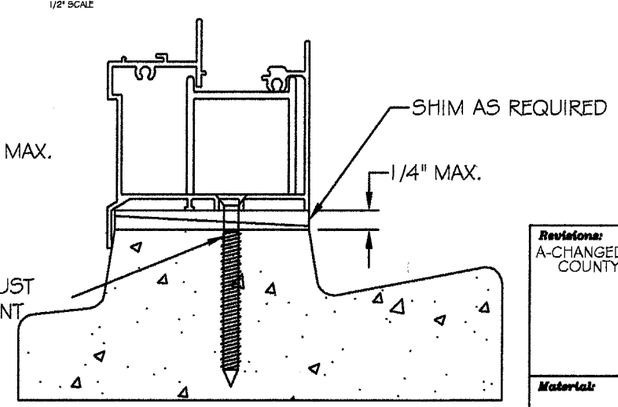

PRECAST & POURED SILL INSTALLATION
1/2" SCALE

ROBT. E. FISHER
WM. M. MEYERS, P.E.
Consulting Engineers
9301 N.E. 6th Ave. C-300
Miami Shores, FL 33138
(305) 758-3117 557-4006 Fax 362-6282

FLA. 18755
STRUCTURAL

Date: 08/23/01

APPROVED AS COMPLYING WITH THE
SOUTH FLORIDA BUILDING CODE
DATE March 29, 2001
BY Manuel Perez
PRODUCT CONTROL DIVISION
BUILDING CODE COMPLIANCE OFFICE
ACCEPTANCE NO. 01-0129.11

Revisions:
A-CHANGED AS PER DADE COUNTYS' REQUEST.

Binnings Pan American

P.O. Box 630038
2805 N.E. 185th Street
Miami, Florida 33163
(305)931-2350

Draw Class:	Part Class:	Prod. Category:	Series/Model:	Item:	Sheet:
ASSEM.	—	H.S.	PA-25		1 of 8

Material:

Drawn By:	Date:
PJS	10/7/97

Revised By:	Date:
PJS	3/12/98

PA-25 XO/OX - XOX HORIZONTAL ROLLER VERTICAL ASSEMBLY DRAWING

Engineer Name & Number:	Drawing Number:	Revision Level:
William M. Meyers R.E. #18755	PA-25DC	

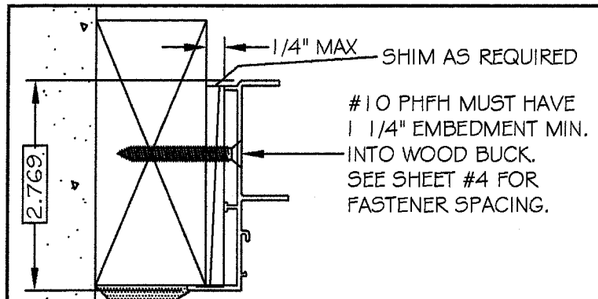

2 X WOOD BUCK INSTALLATION
1/2" SCALE

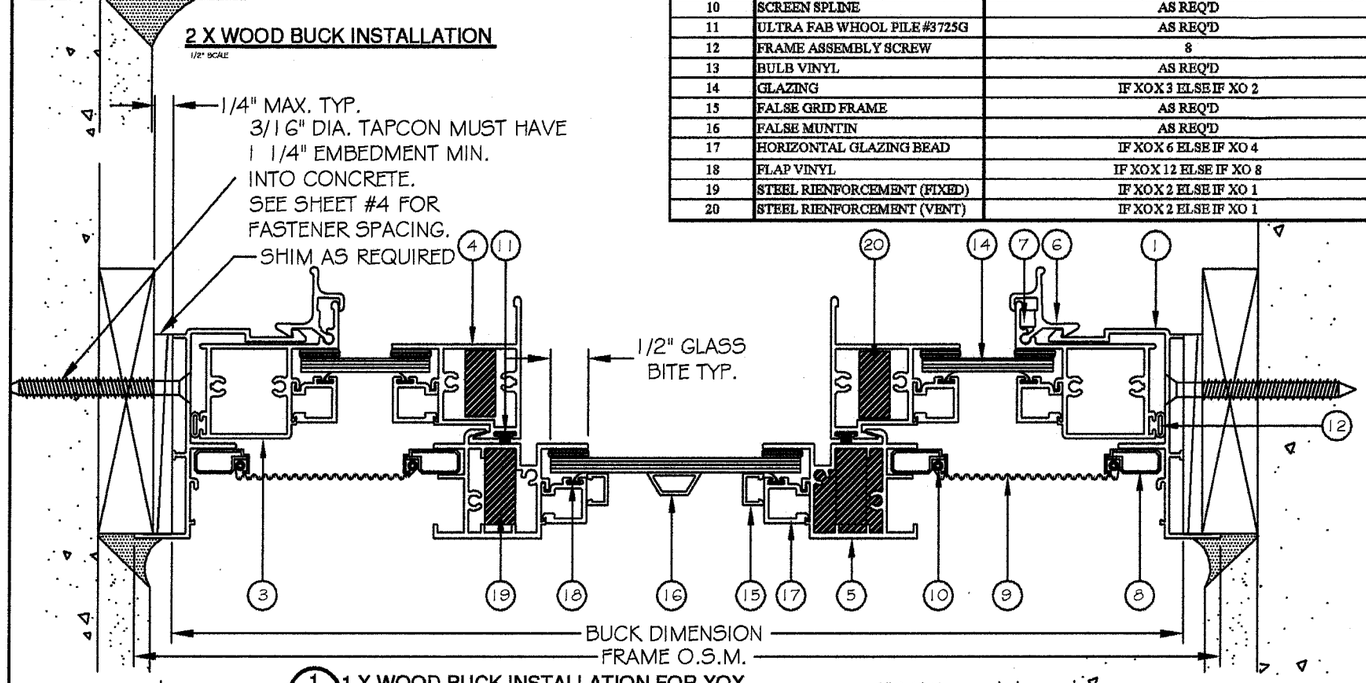

1/2 1 X WOOD BUCK INSTALLATION FOR XOX
1/2" SCALE

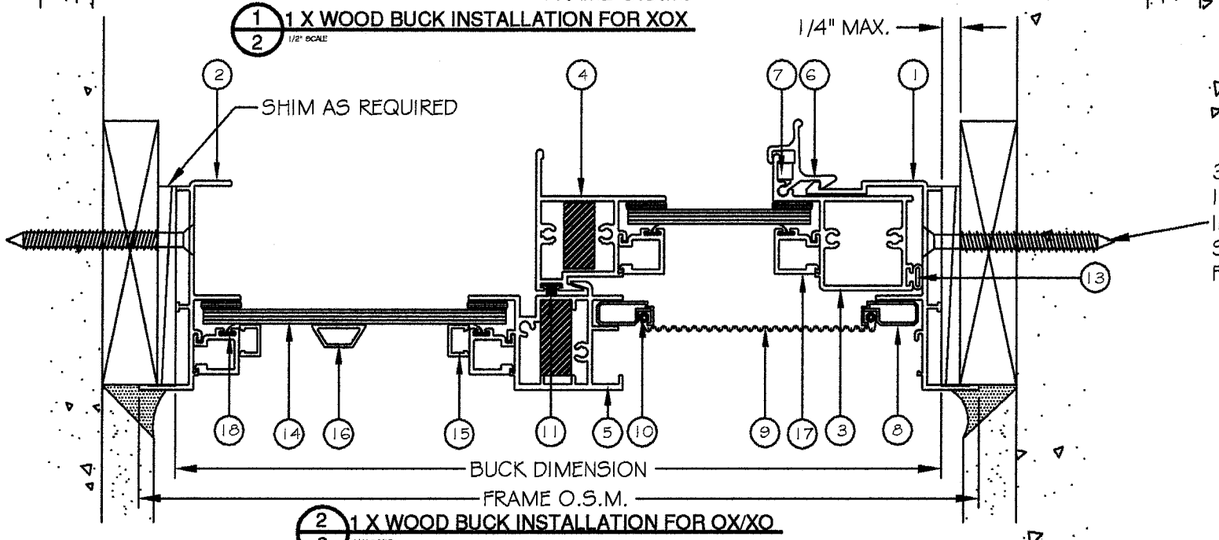

2/2 1 X WOOD BUCK INSTALLATION FOR OX/XO
1/2" SCALE

HORIZONTAL SECTION BILL OF MATERIAL

PART NO.	ITEM	QUANTITY	EXTRUSION NUMBER	MACHINING NUMBER	MATERIAL	REMARKS
1	VENT FRAME JAMB	IF XOX 2 ELSE IF XO 1	20-01	20-01-2	6063 T-5	
2	FIXED FRAME JAMB	IF XOX 0 ELSE IF XO 1	25-03	25-03-1	6063 T-5	
3	VENT SIDE RAIL	IF XOX 2 ELSE IF XO 1	20-06	20-06-2	6063 T-5	
4	VENT MEETING RAIL	IF XOX 2 ELSE IF XO 1	20-05	20-05-2	6063 T-5	
5	FRAME MEETING RAIL	IF XOX 2 ELSE IF XO 1	20-02	20-02-2	6063 T-5	
6	SNAP LATCH	IF XOX 4 ELSE IF XO 2 - EGRESS IF XO/OX 1 ELSE IF XOX 2	14-89	14-89-1	6063 T-5	
7	SNAP LATCH SPRING	IF XOX 4 ELSE IF XO 2 - EGRESS IF XO/OX 1 ELSE IF XOX 2	14-6010		SPRING STL.	
8	SCREEN FRAME	IF XOX 4 ELSE IF XO 2	19-011		.0085 ALUM.	
9	SCREEN MESH	AS REQ'D	1816		FIBERGLASS	
10	SCREEN SPLINE	AS REQ'D	4802004		VINYL	
11	ULTRA FAB WHOOL PILE #3725G	AS REQ'D	4802100		FIN SEAL	VENT MEETING RAIL
12	FRAME ASSEMBLY SCREW	8			STEEL	#8 X 1" PPHSMS PILOT POINT
13	BULB VINYL	AS REQ'D	14-2008		FLEX PVC	
14	GLAZING	IF XOX 3 ELSE IF XO 2				1/8" OR 3/16" ANNEALED
15	FALSE GRID FRAME	AS REQ'D	14-92	25-3072	6063 T-5	OPTIONAL
16	FALSE MUNTIN	AS REQ'D	14-88	25-3074	6063 T-5	OPTIONAL
17	HORIZONTAL GLAZING BEAD	IF XOX 6 ELSE IF XO 4	20-12/13/14/15	20-12-1	6063 T-5	
18	FLAP VINYL	IF XOX 12 ELSE IF XO 8	18-2001		VINYL	
19	STEEL RIENFORCEMENT (FIXED)	IF XOX 2 ELSE IF XO 1			STEEL	1" X 13/32" OPTIONAL-FOR XOX TABLE 11 / FOR XO/OX TABLE 2
20	STEEL RIENFORCEMENT (VENT)	IF XOX 2 ELSE IF XO 1			STEEL	7/8" X 13/32" OPTIONAL-FOR XOX TABLE 11 / FOR XO/OX TABLE 2

XOX BUCK WIDTH	DAYLIGHT OPENING VENT	DAYLIGHT OPENING FIXED	GLASS WIDTH VENT	GLASS WIDTH FIXED	SASH OPENING	FRAME O.S.M.
72	15 1/16	31 15/16	16 1/16	32 15/16	15 1/4	25
84	19 1/16	35 15/16	20 1/16	36 15/16	19 1/4	26 1/2
✡ 96	21 1/16	43 15/16	22 1/16	44 15/16	21 1/4	31
✡ 105.375	23 1/8	49 1/4	24 1/8	50 1/4	23 5/16	37
✡ 108	51 5/32	51 28/32	24 1/8	52 7/8	23 5/16	41

✡ These sizes meet the minimum egress requirment. However, window widths must be matched to window heights to determine minimum clear opening.

XO-OX BUCK WIDTH	DAYLIGHT OPENING VENT	DAYLIGHT OPENING FIXED	GLASS WIDTH VENT	GLASS WIDTH FIXED	SASH OPENING	FRAME O.S.M.
24	9 5/32	9 5/32	10 1/16	10 3/8	9 13/16	25
25 1/2	9 29/32	9 29/32	10 13/16	11 1/8	10 9/16	26 1/2
30	12 5/32	12 5/32	13 1/16	13 3/8	12 13/16	31
36	15 5/32	15 5/32	16 1/16	16 3/8	15 13/16	37
40	17 5/32	17 5/32	18 1/16	18 3/8	17 13/16	41
44	19 5/32	19 5/32	20 1/16	20 3/8	19 13/16	45
48	21 5/32	21 5/32	22 1/16	22 3/8	21 13/16	49
✡ 52 1/8	23 7/32	23 7/32	24 1/8	24 7/16	23 7/8	53 1/8
✡ 56	25 5/32	25 5/32	26 1/16	26 3/8	25 13/16	57
✡ 60	27 5/32	27 5/32	28 1/16	28 3/8	27 13/16	61
✡ 64	29 5/32	29 5/32	30 1/16	30 3/8	29 13/16	65
✡ 68	31 5/32	31 5/32	32 1/16	32 3/8	31 13/16	69
✡ 72	33 5/32	33 5/32	34 1/16	34 3/8	33 13/16	73
✡ 73 1/8	33 23/32	33 23/32	34 3/4	34 15/16	34 3/8	74 1/8

✡ These sizes meet the minimum egress width requirement. However, window widths must be matched to window heights to determine minimum clear opening.

ROBT. E. FISHER
WM. M. MEYERS, P.E.
Consulting Engineers
9301 N.E. 6th Ave. C-300
Miami Shores, FL 33138
(305) 758-3117 557-4006 Fax 362-6282
FLA. 18755
STRUCTURAL

Date: 05/28/01

APPROVED AS COMPLYING WITH THE SOUTH FLORIDA BUILDING CODE
DATE March 29, 2001
BY Manuel Perez
PRODUCT CONTROL DIVISION
BUILDING CODE COMPLIANCE OFFICE
ACCEPTANCE NO. 01-0129.11

Revisions:
A-CHANGED AS PER DADE COUNTYS' REQUEST.

Binnings Pan American PA
P.O. Box 630038
2805 N.E. 185th Street
Miami, Florida 33163
(305)931-2350

Draw Class:	Part Class:	Prod Catagory:	Series/Model:	Item:	Sheet:
ASSEM.	—	H.S.	PA-25		2 of 8

Material:

Drawn By: PJS — Date: 12/10/97

Revised By: PJS — Date: 3/20/98

PA-25 XO/OX - XOX HORIZONTAL ROLLER HORIZONTAL ASSEMBLY DRAWING

Engineer Name & Number: William M. Meyers R.E. #18755

Drawing Number: PA-25DC

Revision Level:

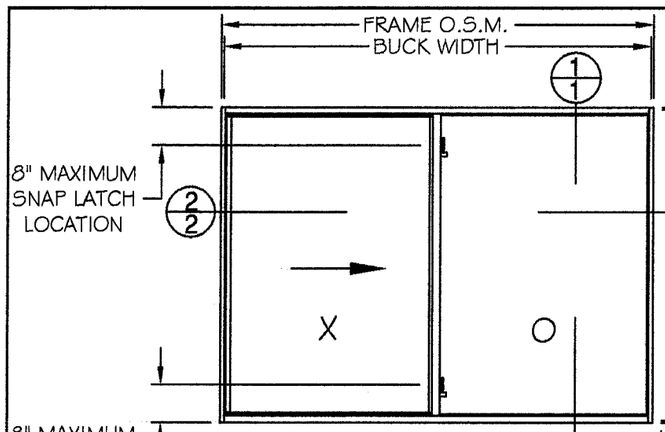

PA-25 OX/XO STANDARD ELEVATION

3/16" Temp.	Table 1
3/16" Ann. w/ Rienforcement	Table 2
1/8" Temp. Sentry	Table 4
3/16" Ann. Sentry	Table 5
3/16" Temp. Sentry	Table 6

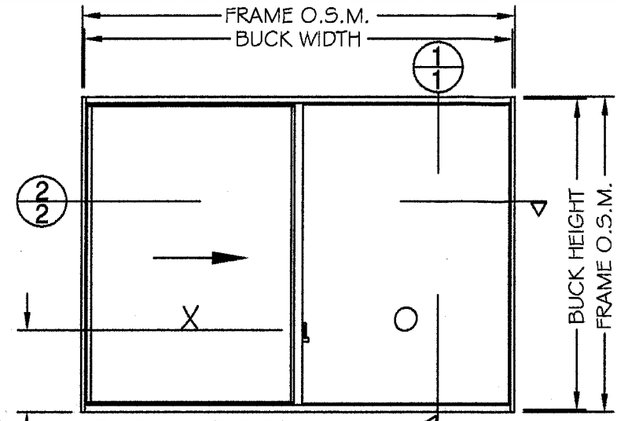

PA-25 OX/XO EGRESS ELEVATION

3/16" Ann.	Table 3

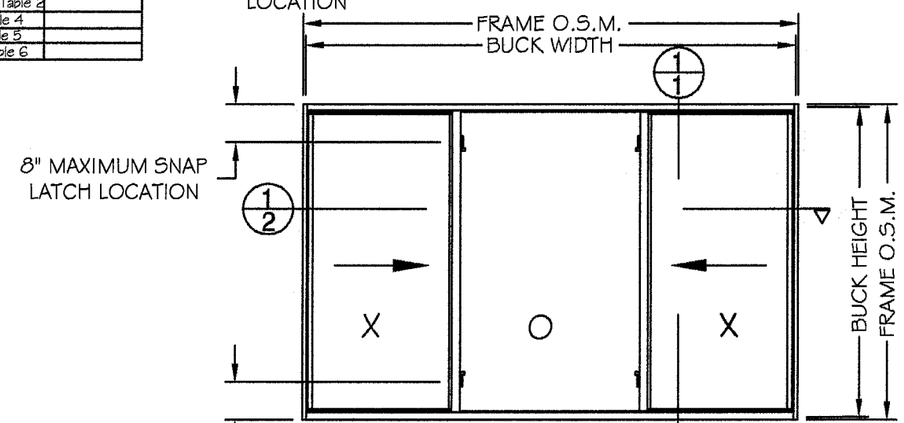

PA-25 XOX STANDARD ELEVATION

1/8" Ann.	Table 7
1/8" Temp.	Table 8
3/16" Temp.	Table 9
3/16" Temp. w/ Rienforcement	Table 10
1/8" Temp. Sentry	Table 12
3/16" Ann. Sentry	Table 13
3/16" Temp. Sentry	Table 14

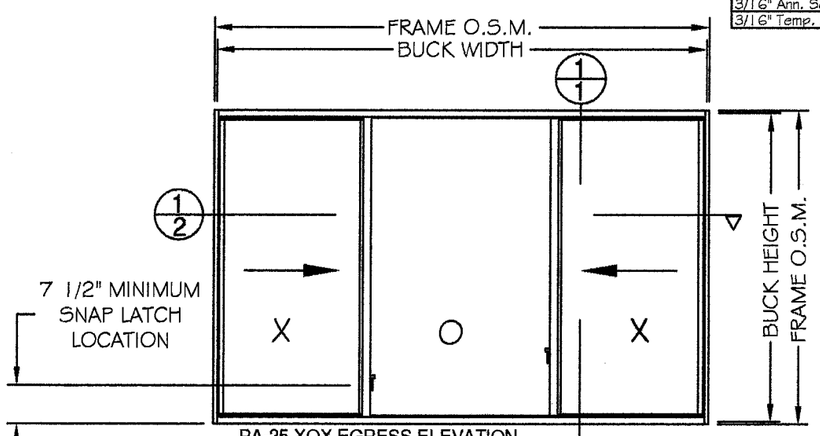

PA-25 XOX EGRESS ELEVATION

3/16" Temp.	Table 11

VENT CONSTRUCTION		
Part Name	Material	Construction Details
Vent Head	6063 T-5 Alum. (Binnings PA	Butt Joining
Vent Sill	6063 T-5 Alum. (Binnings PA	Butt Joining
Vent Jambs	6061 T-6 Alum. (Binnings PA	Butt Joining
Corner	Steel	#8 x 1" phphpp

FRAME CONSTRUCTION		
Part Name	Material	Construction Details
Head	6063 T-5 Alum. (Binnings PA	Butt Joining
Sill	6063 T-5 Alum. (Binnings PA	Butt Joining
Jambs	6063 T-5 Alum. (Binnings PA	Butt Joining
Corner	Steel	#8 x 1" phphpp

WEATHER STRIPPING		
Quantity	Description	Location
If OX 2 else if XOX 4	Fin Seal Poly Pile (UltraFab)	Interior Leg-Top & Bottom Rail
If OX 2 else if XOX 4	Poly Pile WSTP (UltraFab)	Exterior Leg-Top & Bottom Rail
If OX 1 else iff XOX 2	Fin Seal Poly Pile (UltraFab)	Meeting Rail
If OX 1 else if XOX 2	Fin Seal Poly Pile (UltraFab)	Frame Jamb

HARDWARE		
Quantity	Description	Location
If OX 2 else if XOX 4	Snap Latch (Binnings PA)	Vent Meeting Rail
If OX 2 else if XOX 4	Roller Assembly (Reflectolite)	Vent Bottom Rail
If OX EGRESS 1 else if XOX EGRESS 2	Snap Latch (Binnings PA)	Vent Meeting Rail

GLAZING MATERIAL		
Material	Manufacturer	Table Number
Silicone	DOW	
Glazing Bead	Binnings Pan-Am	
False Muntin Frame	Binnings Pan-Am	
Glass: 1/8" Annealed	AFG / PPG / Guardian	XOX - Table 7
1/8" Tempered	AFG / PPG / Guardian	XOX - Table 9
3/16" Tempered	AFG / PPG / Guardian	OX - Table 1 / XOX - Table 9
3/16" Annealed	AFG / PPG / Guardian	XO/OX - Table 3
1/8" Tempered Sentry	Romag	OX - Table 4 / XOX - Table 13
3/16" Annealed Sentry	Romag	OX - Table 5 / XOX - Table 14
3/16" Tempered Sentry	Romag	OX - Table 6 / XOX - Table 15

GLAZING METHOD
1. Extruded Glazing Bead (Binnings Pan-Am)
2. False Muntin Grid System (Binnings Pan-Am) Optional

ROBT. E. FISHER
WM. M. MEYERS, P.E.
Consulting Engineers
9301 N.E. 6th Ave. C-300
Miami Shores, FL 33138
(305) 758-3117 557-4006 Fax 362-6282

FLA. 18755
STRUCTURAL
Date: 05/25/01

APPROVED AS COMPLYING WITH THE SOUTH FLORIDA BUILDING CODE
DATE March 29, 2001
BY Manuel Cruz
PRODUCT CONTROL DIVISION
BUILDING CODE COMPLIANCE OFFICE
ACCEPTANCE NO. 01-0129.11

Revisions:
A-CHANGED AS PER DADE COUNTYS' REQUEST OF 3/20/98.
A-CHANGED AS PER DADE COUNTYS' REQUEST 3/31/98.

Binnings Pan American PA
P.O. Box 630038
2805 N.E. 185th Street
Miami, Florida 33163
(305)931-2350

Draw Class:	Part Class:	Prod. Catagory:	Series/Model:	Item:	Sheet:
ASSEM.		H.S.	PA-25		3 of 8

Material:

Drawn By:	Date:
PJS	12/10/97
Revised By:	**Date:**
PJS	4/3/98

PA-25 XO/OX - XOX HORIZONTAL ROLLER CONSTRUCTION DETAILS

Engineer Name & Number:	Drawing Number:	Revision Level:
William M. Meyers R.E. #18755	PA-25DC	B

Frame Head & Sill Number of Fasteners XO/OX Units

Window Width	Window Height (inches)								
	25	30	36	37.375	40	44	48	49.625	60
24	3	3	3	3	3	3	3	3	3
25.5	3	3	3	3	3	3	3	3	3
30	3	3	3	3	3	3	3	3	3
36	3	3	3	3	3	3	3	3	3
40	4	4	4	4	4	4	4	4	4
44	4	4	4	4	4	4	4	4	4
48	4	4	4	4	4	4	4	4	4
52.125	5	5	5	5	5	5	5	5	5
56	5	5	5	5	5	5	5	5	5
60	5	5	5	5	5	5	5	5	5
64	6	6	6	6	6	6	6	6	6
68	6	6	6	6	6	6	6	6	6
72	6	6	6	6	6	6	6	6	6
72.375	6	6	6	6	6	6	6	6	6

Frame Jamb Number of Fasteners XO/OX Units

Window Width	Window Height (inches)								
	25	30	36	37.375	40	44	48	49.625	60
25.5	2	3	3	3	3	3	4	4	4
30	2	3	3	3	3	3	4	4	4
36	2	3	3	3	3	3	4	4	4
40	2	3	3	3	3	3	4	4	4
44	2	3	3	3	3	3	4	4	4
48	2	3	3	3	3	3	4	4	4
52.125	2	3	3	3	3	3	4	4	4
56	2	3	3	3	3	3	4	4	4
60	2	3	3	3	3	3	4	4	4
64	2	3	3	3	3	3	4	4	4
68	2	3	3	3	3	3	4	4	4
72	2	3	3	3	3	3	4	4	4
72.375	2	3	3	3	3	3	4	4	4

Frame Head & Sill Number of Fasteners XOX Units

Window Width (inches)	Window Height (inches)								
	25	30	36	37.375	40	44	48	49.625	60
72.000	6	6	6	6	6	6	6	6	6
84.000	7	7	7	7	7	7	7	7	7
96.000	10	10	10	10	10	10	10	10	10
105.375	12	12	12	12	12	12	12	12	12
108.000	12	12	12	12	12	12	12	12	12

Frame Jamb Number of Fasteners XOX Units

Window Width (inches)	Window Height (inches)								
	25	30	36	37.375	40	44	48	49.625	60
72.000	2	3	3	3	3	3	4	4	4
84.000	2	3	3	3	3	3	4	4	4
96.000	3	3	3	3	3	3	4	4	4
105.375	4	4	4	4	4	4	4	4	4
108.000	4	4	4	4	4	4	4	4	4

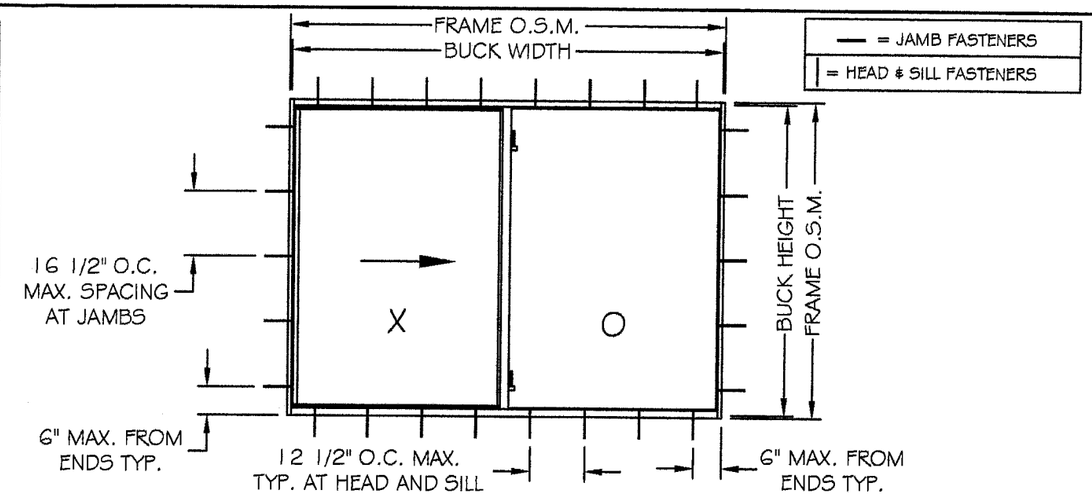

PA-25 OX/XO STANDARD ELEVATION

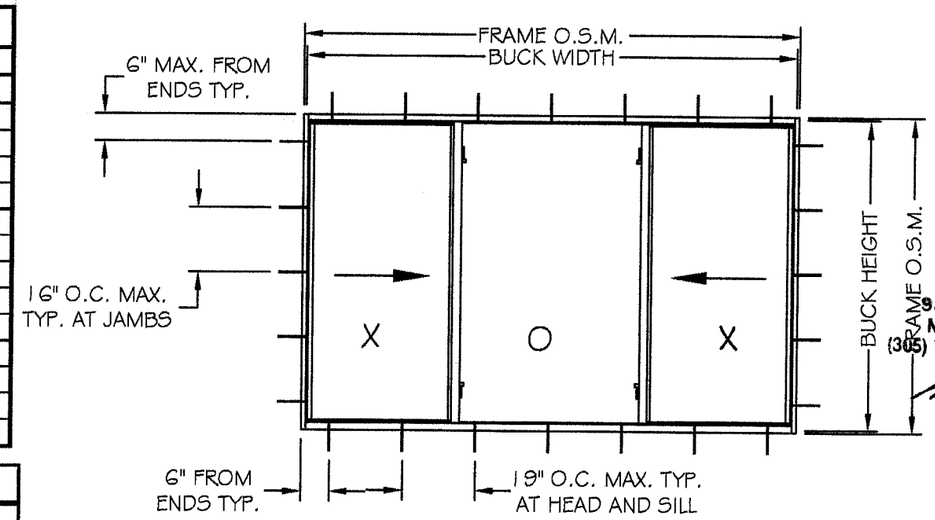

PA-25 XOX STANDARD ELEVATION

Note: These charts apply to all units.

ROBT. E. FISHER
WM. M. MEYERS, P.E.
Consulting Engineers
9301 N.E. 6th Ave. C-300
Miami Shores, FL 33138
(305) 758-3117 557-4006 Fax 362-6282
FLA. 18755
STRUCTURAL

Date: 03/28/01

APPROVED AS COMPLYING WITH THE SOUTH FLORIDA BUILDING CODE
DATE March 29, 2001
BY Manuel Chez
PRODUCT CONTROL DIVISION
BUILDING CODE COMPLIANCE OFFICE
ACCEPTANCE NO. 01-0129.11

Revisions:
A-CHANGED AS PER DADE COUNTYS' REQUEST.

Binnings Pan American PA
P.O. Box 630038
2805 N.E. 185th Street
Miami, Florida 33163
(305)931-2350

Draw Class:	Part Class:	Prod. Category:	Series/Model:	Item:	Sheet:
FASTENER		H.S.	PA-25		4 of 8

Material:

Drawn By: PJS — Date: 12/10/97

Revised By: PJS — Date: 3/12/98

PA-25 XO/OX, XOX HORIZONTAL ROLLER FASTENER RESULTS

Engineer Name & Number: William M. Myers R.E. #18755

Drawing Number: PA-25DC

Revision Level:

Comparative Analysis (Positive Loads)

Table 1A PA-25 Horizontal Rolling Window XO Positive Design Loads with Water Requirement

Based on Comparative Analysis with 3/16" Tempered Glass

Test Report: ATL #0513.01-97 Unit-F — These units ***DO*** require hurricane protection.

Window Width (inches)	Window Height(inches)								
	25	30	36	37.375	40	44	48	49.625	60
24.000	69.3	69.3	69.3	69.3	69.3	69.3	69.3	69.3	69.3
25.500	69.3	69.3	69.3	69.3	69.3	69.3	69.3	69.3	69.3
30.000	69.3	69.3	69.3	69.3	69.3	69.3	69.3	69.3	69.3
36.000	69.3	69.3	69.3	69.3	69.3	69.3	69.3	69.3	69.3
40.000	69.3	69.3	69.3	69.3	69.3	69.3	69.3	69.3	69.3
44.000	69.3	69.3	69.3	63.8	69.3	69.3	69.3	69.3	69.3
48.000	69.3	69.3	69.3	69.3	69.3	69.3	69.3	69.3	69.3
52.125	69.3	69.3	69.3	69.3	69.3	69.3	69.3	69.3	69.3
56.000	69.3	69.3	69.3	69.3	69.3	69.3	69.3	69.3	69.3
60.000	69.3	69.3	69.3	69.3	69.3	69.3	69.3	69.3	69.3
64.000	69.3	69.3	69.3	69.3	69.3	69.3	69.3	69.3	69.3
68.000	69.3	69.3	69.3	69.3	69.3	69.3	69.3	69.3	69.3
72.000	69.3	69.3	69.3	69.3	69.3	69.3	69.3	69.3	69.3
72.375	69.3	69.3	69.3	69.3	69.3	69.3	69.3	69.3	69.3

Comparative Analysis (Negative Loads)

Table 1B PA-25 Horizontal Rolling Window XO Negative Design Loads

Based on Comparative Analysis with 3/16" Tempered Glass

Test Report: ATL #0513.01-97 Unit-F — These units ***DO*** require hurricane protectio

Window Width (inches)	Window Height(inches)								
	25	30	36	37.375	40	44	48	49.625	60
24.000	-120.0	-120.0	-120.0	-120.0	-120.0	-120.0	-120.0	-120.0	-120.0
25.500	-120.0	-120.0	-120.0	-120.0	-120.0	-120.0	-120.0	-120.0	-120.0
30.000	-120.0	-120.0	-120.0	-120.0	-120.0	-120.0	-120.0	-120.0	-120.0
36.000	-120.0	-120.0	-120.0	-120.0	-120.0	-120.0	-120.0	-120.0	-120.0
40.000	-120.0	-120.0	-120.0	-120.0	-120.0	-120.0	-120.0	-120.0	-120.0
44.000	-120.0	-120.0	-120.0	-120.0	-120.0	-120.0	-120.0	-120.0	-120.0
48.000	-120.0	-120.0	-120.0	-120.0	-120.0	-120.0	-120.0	-120.0	-120.0
52.125	-120.0	-120.0	-120.0	-120.0	-120.0	-120.0	-120.0	-120.0	-120.0
56.000	-120.0	-120.0	-120.0	-120.0	-120.0	-120.0	-120.0	-120.0	-120.0
60.000	-120.0	-120.0	-120.0	-120.0	-120.0	-120.0	-120.0	-120.0	-120.0
64.000	-120.0	-120.0	-120.0	-120.0	-120.0	-120.0	-120.0	-120.0	-120.0
68.000	-120.0	-120.0	-120.0	-120.0	-120.0	-120.0	-120.0	-120.0	-118.5
72.000	-120.0	-120.0	-120.0	-120.0	-120.0	-120.0	-120.0	-120.0	-115.3
72.375	-120.0	-120.0	-120.0	-120.0	-120.0	-120.0	-120.0	-120.0	-115.0

Comparative Analysis (Positive Loads)

Table 2A PA-25 Horizontal Rolling Window XO Positive Design Loads with Water Requirement

Based on Comparative Analysis with 3/16" Tempered Glass with ***Steel Rienforcement***

Test Report: ATL #0513.01-97 Unit-G — These units ***DO*** require hurricane protection.

Window Width (inches)	Window Height(inches)								
	25	30	36	37.375	40	44	48	49.625	60
24.000	69.3	69.3	69.3	69.3	69.3	69.3	69.3	69.3	69.3
25.500	69.3	69.3	69.3	69.3	69.3	69.3	69.3	69.3	69.3
30.000	69.3	69.3	69.3	69.3	69.3	69.3	69.3	69.3	69.3
36.000	69.3	69.3	69.3	69.3	69.3	69.3	69.3	69.3	69.3
40.000	69.3	69.3	69.3	69.3	69.3	69.3	69.3	69.3	69.3
44.000	69.3	69.3	69.3	63.8	69.3	69.3	69.3	69.3	69.3
48.000	69.3	69.3	69.3	69.3	69.3	69.3	69.3	69.3	69.3
52.125	69.3	69.3	69.3	69.3	69.3	69.3	69.3	69.3	69.3
56.000	69.3	69.3	69.3	69.3	69.3	69.3	69.3	69.3	69.3
60.000	69.3	69.3	69.3	69.3	69.3	69.3	69.3	69.3	69.3
64.000	69.3	69.3	69.3	69.3	69.3	69.3	69.3	69.3	69.3
68.000	69.3	69.3	69.3	69.3	69.3	69.3	69.3	69.3	69.3
72.000	69.3	69.3	69.3	69.3	69.3	69.3	69.3	69.3	69.3
72.375	69.3	69.3	69.3	69.3	69.3	69.3	69.3	69.3	69.3

Comparative Analysis (Negative Loads)

Table 2B PA-25 Horizontal Rolling Window XO Negative Design Loads

Based on Comparative Analysis with 3/16" Tempered Glass with ***Steel Rienforcement***

Test Report: ATL #0513.01-97 Unit-G — These units ***DO*** require hurricane protectio

Window Width (inches)	Window Height(inches)								
	25	30	36	37.375	40	44	48	49.625	60
24.000	-120.0	-120.0	-120.0	-120.0	-120.0	-120.0	-120.0	-120.0	-120.0
25.500	-120.0	-120.0	-120.0	-120.0	-120.0	-120.0	-120.0	-120.0	-120.0
30.000	-120.0	-120.0	-120.0	-120.0	-120.0	-120.0	-120.0	-120.0	-120.0
36.000	-120.0	-120.0	-120.0	-120.0	-120.0	-120.0	-120.0	-120.0	-120.0
40.000	-120.0	-120.0	-120.0	-120.0	-120.0	-120.0	-120.0	-120.0	-120.0
44.000	-120.0	-120.0	-120.0	-120.0	-120.0	-120.0	-120.0	-120.0	-120.0
48.000	-120.0	-120.0	-120.0	-120.0	-120.0	-120.0	-120.0	-120.0	-120.0
52.125	-120.0	-120.0	-120.0	-120.0	-120.0	-120.0	-120.0	-120.0	-120.0
56.000	-120.0	-120.0	-120.0	-120.0	-120.0	-120.0	-120.0	-120.0	-120.0
60.000	-120.0	-120.0	-120.0	-120.0	-120.0	-120.0	-120.0	-120.0	-120.0
64.000	-120.0	-120.0	-120.0	-120.0	-120.0	-120.0	-120.0	-120.0	-120.0
68.000	-120.0	-120.0	-120.0	-120.0	-120.0	-120.0	-120.0	-120.0	-120.0
72.000	-120.0	-120.0	-120.0	-120.0	-120.0	-120.0	-120.0	-120.0	-120.0
72.375	-120.0	-120.0	-120.0	-120.0	-120.0	-120.0	-120.0	-120.0	-120.0

Comparative Analysis (Positive Loads)

Table 3A PA-25 Horizontal Rolling Window *XO EGRESS* Positive Design Loads with Water Requirement

Based on Comparative Analysis with 3/16" Annealed Glass

Test Report: ATL #0513.01-97 Unit-I — These units ***DO*** require hurricane protection.

Window Width (inches)	Window Height(inches)								
	25	30	36	37.375	40	44	48	49.625	60
24.000	69.3	69.3	69.3	69.3	69.3	69.3	69.3	69.3	69.3
25.500	69.3	69.3	69.3	69.3	69.3	69.3	69.3	69.3	69.3
30.000	69.3	69.3	69.3	69.3	69.3	69.3	69.3	69.3	69.3
36.000	69.3	69.3	69.3	69.3	69.3	69.3	69.3	69.3	69.3
40.000	69.3	69.3	69.3	69.3	69.3	69.3	69.3	69.3	69.3
44.000	69.3	69.3	69.3	69.3	69.3	69.3	69.3	69.3	69.3
48.000	69.3	69.3	69.3	69.3	69.3	69.3	69.3	69.3	69.3
52.125	69.3	69.3	69.3	69.3	69.3	69.3	69.3	69.3	67.8
56.000	69.3	69.3	69.3	69.3	69.3	69.3	69.3	69.3	64.1
60.000	69.3	69.3	69.3	69.3	69.3	69.3	69.3	69.3	61.0
64.000	69.3	69.3	69.3	69.3	69.3	69.3	69.3	69.3	58.6
68.000	69.3	69.3	69.3	69.3	69.3	69.2	66.8	65.9	57.0
72.000	69.3	69.3	67.8	66.9	65.3	63.1	61.0	60.2	53.6
72.375	69.3	69.3	67.2	66.3	64.8	62.6	60.5	59.7	53.3

Comparative Analysis (Negative Loads)

Table 3B PA-25 Horizontal Rolling Window *XO EGRESS* Negative Design Loads

Based on Comparative Analysis with 3/16" Annealed Glass

Test Report: ATL #0513.01-97 Unit-I — These units ***DO*** require hurricane protection.

Window Width (inches)	Window Height(inches)								
	25	30	36	37.375	40	44	48	49.625	60
24.000	-120.0	-120.0	-120.0	-120.0	-120.0	-120.0	-120.0	-120.0	-120.0
25.500	-120.0	-120.0	-120.0	-120.0	-120.0	-120.0	-120.0	-120.0	-120.0
30.000	-120.0	-120.0	-120.0	-120.0	-120.0	-120.0	-120.0	-120.0	-106.1
36.000	-120.0	-120.0	-120.0	-120.0	-120.0	-120.0	-119.0	-114.2	-90.9
40.000	-120.0	-120.0	-120.0	-120.0	-120.0	-120.0	-109.9	-105.4	-83.5
44.000	-120.0	-120.0	-120.0	-120.0	-120.0	-115.1	-102.6	-98.3	-77.4
48.000	-120.0	-120.0	-120.0	-120.0	-120.0	-108.8	-96.6	-92.5	-72.4
52.125	-120.0	-120.0	-114.7	-113.0	-109.7	-103.5	-91.6	-87.5	-67.8
56.000	-116.2	-109.4	-102.3	-100.8	-98.0	-94.1	-87.7	-83.7	-64.1
60.000	-103.3	-97.6	-91.5	-90.2	-87.8	-84.4	-81.3	-79.4	-61.0
64.000	-92.5	-87.6	-82.3	-81.2	-79.2	-76.2	-73.5	-72.5	-58.6
68.000	-83.3	-79.1	-74.5	-73.5	-71.8	-69.2	-66.8	-65.9	-56.7
72.000	-75.4	-71.8	-67.8	-66.9	-65.3	-63.1	-61.0	-60.2	-53.6
72.375	-74.8	-71.1	-67.2	-66.3	-64.8	-62.6	-60.5	-59.7	-53.3

Binnings Pan American

P.O. Box 630038
2805 N.E. 185th Street
Miami, Florida 33163
(305)931-2350

Sheet: 5 of 8

Draw Class: CALCS | Part Class: — | Prod Category: H.S. | Series/Model: PA-25 | Item:

PA-25 HORIZONTAL ROLLER XO/OX LOAD RESULTS

Engineer Name & Number: William M. Meyers R.E. #18755 | Drawing Number: PA-25DC | Revision Level: A

CHANGED AS PER DADE COUNTY REQUEST.

Drawn By: PJS | Date: 12/10/97

Revised By: PJS | Date: 3/12/98

ROBT. E. FISHER
WM. M. MEYERS, P.E.
Consulting Engineers
930 N.E. 6th Ave. C-30
Miami Shores, FL 33138
(305) 758-3117 557-4006 Fax 362-6282

FLA. 18755
STRUCTURAL
Date: 05/25/01

APPROVED AS COMPLYING WITH THE SOUTH FLORIDA BUILDING CODE
DATE March 29, 2001
BY [signature]
PRODUCT CONTROL DIVISION
BUILDING CODE COMPLIANCE OFFICE
ACCEPTANCE NO. 01-0129.11

Comparative Analysis (Positive Loads)

Table 4A PA-25 Horizontal Rolling Window XO Positive Design Loads with Water Requirement
Based on Comparative Analysis with 1/8" Tempered Sentry Impact Glass
Test Report: ATL #0721.01-96
These units ***DO NOT*** require hurricane protecti

Window Width (inches)	Window Height(inches)								
	25	30	36	37.375	40	44	48	49.625	60
24.000	69.3	69.3	69.3	69.3	69.3	69.3	69.3	69.3	69.3
25.500	69.3	69.3	69.3	69.3	69.3	69.3	69.3	69.3	69.3
30.000	69.3	69.3	69.3	69.3	69.3	69.3	69.3	69.3	69.3
36.000	69.3	69.3	69.3	69.3	69.3	69.3	69.3	69.3	69.3
40.000	69.3	69.3	69.3	69.3	69.3	69.3	69.3	69.3	69.3
44.000	69.3	69.3	69.3	69.3	69.3	69.3	69.3	69.3	69.3
48.000	69.3	69.3	69.3	69.3	69.3	69.3	69.3	69.3	69.3
52.125	69.3	69.3	69.3	69.3	69.3	69.3	69.3	69.3	69.3
56.000	69.3	69.3	69.3	69.3	69.3	69.3	69.3	69.3	69.3
60.000	69.3	69.3	69.3	69.3	69.3	69.3	69.3	69.3	69.3
64.000	69.3	69.3	69.3	69.3	69.3	69.3	69.3	69.3	69.3
68.000	69.3	69.3	69.3	69.3	69.3	69.3	69.3	69.3	69.3
72.000	69.3	69.3	69.3	69.3	69.3	69.3	69.3	69.3	69.3
72.375	69.3	69.3	69.3	69.3	69.3	69.3	69.3	69.3	69.3

Comparative Analysis (Negative Loads)

Table 4B PA-25 Horizontal Rolling Window XO Negative Design Loads
Based on Comparative Analysis with 1/8" Tempered Sentry Impact Glass
Test Report: ATL #0721.01-96
These units ***DO NOT*** require hurricane protecti

Window Width (inches)	Window Height(inches)								
	25	30	36	37.375	40	44	48	49.625	60
24.000	-70.0	-70.0	-70.0	-70.0	-70.0	-70.0	-70.0	-70.0	-70.0
25.500	-70.0	-70.0	-70.0	-70.0	-70.0	-70.0	-70.0	-70.0	-70.0
30.000	-70.0	-70.0	-70.0	-70.0	-70.0	-70.0	-70.0	-70.0	-70.0
36.000	-70.0	-70.0	-70.0	-70.0	-70.0	-70.0	-70.0	-70.0	-70.0
40.000	-70.0	-70.0	-70.0	-70.0	-70.0	-70.0	-70.0	-70.0	-70.0
44.000	-70.0	-70.0	-70.0	-70.0	-70.0	-70.0	-70.0	-70.0	-70.0
48.000	-70.0	-70.0	-70.0	-70.0	-70.0	-70.0	-70.0	-70.0	-70.0
52.125	-70.0	-70.0	-70.0	-70.0	-70.0	-70.0	-70.0	-70.0	-70.0
56.000	-70.0	-70.0	-70.0	-70.0	-70.0	-70.0	-70.0	-70.0	-70.0
60.000	-70.0	-70.0	-70.0	-70.0	-70.0	-70.0	-70.0	-70.0	-70.0
64.000	-70.0	-70.0	-70.0	-70.0	-70.0	-70.0	-70.0	-70.0	-70.0
68.000	-70.0	-70.0	-70.0	-70.0	-70.0	-70.0	-70.0	-70.0	-70.0
72.000	-70.0	-70.0	-70.0	-70.0	-70.0	-70.0	-70.0	-70.0	-70.0
72.375	-70.0	-70.0	-70.0	-70.0	-70.0	-70.0	-70.0	-70.0	-70.0

Comparative Analysis (Positive Loads)

Table 5A PA-25 Horizontal Rolling Window XO Positive Design Loads with Water Requirement
Based on Comparative Analysis with 3/16" Annealed Sentry Impact Glass
Test Report: ATL #0721.01-96
These units ***DO NOT*** require hurricane protecti

Window Width (inches)	w Height(								
	25	30	36	37.375	40	44	48	49.625	60
24.000	55.0	55.0	55.0	55.0	55.0	55.0	55.0	55.0	55.0
25.500	55.0	55.0	55.0	55.0	55.0	55.0	55.0	55.0	55.0
30.000	55.0	55.0	55.0	55.0	55.0	55.0	55.0	55.0	55.0
36.000	55.0	55.0	55.0	55.0	55.0	55.0	55.0	55.0	55.0
40.000	55.0	55.0	55.0	55.0	55.0	55.0	55.0	55.0	55.0
44.000	55.0	55.0	55.0	55.0	55.0	55.0	55.0	55.0	55.0
48.000	55.0	55.0	55.0	55.0	55.0	55.0	55.0	55.0	55.0
52.125	55.0	55.0	55.0	55.0	55.0	55.0	55.0	55.0	55.0
56.000	55.0	55.0	55.0	55.0	55.0	55.0	55.0	55.0	55.0
60.000	55.0	55.0	55.0	55.0	55.0	55.0	55.0	55.0	55.0
64.000	55.0	55.0	55.0	55.0	55.0	55.0	55.0	55.0	55.0
68.000	55.0	55.0	55.0	55.0	55.0	55.0	55.0	55.0	55.0
72.000	55.0	55.0	55.0	55.0	55.0	55.0	55.0	55.0	53.6
72.375	55.0	55.0	55.0	55.0	55.0	55.0	55.0	55.0	53.3

Comparative Analysis (Negative Loads)

Table 5B PA-25 Horizontal Rolling Window XO Negative Design Loads
Based on Comparative Analysis with 3/16" Annealed Sentry Impact Glass
Test Report: ATL #0721.01-96
These units ***DO NOT*** require hurricane protecti

Window Width (inches)	Window Height(inches)								
	25	30	36	37.375	40	44	48	49.625	60
24.000	-55.0	-55.0	-55.0	-55.0	-55.0	-55.0	-55.0	-55.0	-55.0
25.500	-55.0	-55.0	-55.0	-55.0	-55.0	-55.0	-55.0	-55.0	-55.0
30.000	-55.0	-55.0	-55.0	-55.0	-55.0	-55.0	-55.0	-55.0	-55.0
36.000	-55.0	-55.0	-55.0	-55.0	-55.0	-55.0	-55.0	-55.0	-55.0
40.000	-55.0	-55.0	-55.0	-55.0	-55.0	-55.0	-55.0	-55.0	-55.0
44.000	-55.0	-55.0	-55.0	-55.0	-55.0	-55.0	-55.0	-55.0	-55.0
48.000	-55.0	-55.0	-55.0	-55.0	-55.0	-55.0	-55.0	-55.0	-55.0
52.125	-55.0	-55.0	-55.0	-55.0	-55.0	-55.0	-55.0	-55.0	-55.0
56.000	-55.0	-55.0	-55.0	-55.0	-55.0	-55.0	-55.0	-55.0	-55.0
60.000	-55.0	-55.0	-55.0	-55.0	-55.0	-55.0	-55.0	-55.0	-55.0
64.000	-55.0	-55.0	-55.0	-55.0	-55.0	-55.0	-55.0	-55.0	-55.0
68.000	-55.0	-55.0	-55.0	-55.0	-55.0	-55.0	-55.0	-55.0	-55.0
72.000	-55.0	-55.0	-55.0	-55.0	-55.0	-55.0	-55.0	-55.0	-53.6
72.375	-55.0	-55.0	-55.0	-55.0	-55.0	-55.0	-55.0	-55.0	-53.3

Comparative Analysis (Positive Loads)

Table 6A PA-25 Horizontal Rolling Window XO Positive Design Loads with Water Requirement
Based on Comparative Analysis with 3/16" Tempered Sentry Impact Glass
Test Report: ATL #0721.01-96
These units ***DO NOT*** require hurricane protecti

Window Width (inches)	Window Height(inches)								
	25	30	36	37.375	40	44	48	49.625	60
24.000	69.3	69.3	69.3	69.3	69.3	69.3	69.3	69.3	69.3
25.500	69.3	69.3	69.3	69.3	69.3	69.3	69.3	69.3	69.3
30.000	69.3	69.3	69.3	69.3	69.3	69.3	69.3	69.3	69.3
36.000	69.3	69.3	69.3	69.3	69.3	69.3	69.3	69.3	69.3
40.000	69.3	69.3	69.3	69.3	69.3	69.3	69.3	69.3	69.3
44.000	69.3	69.3	69.3	69.3	69.3	69.3	69.3	69.3	69.3
48.000	69.3	69.3	69.3	69.3	69.3	69.3	69.3	69.3	69.3
52.125	69.3	69.3	69.3	69.3	69.3	69.3	69.3	69.3	69.3
56.000	69.3	69.3	69.3	69.3	69.3	69.3	69.3	69.3	69.3
60.000	69.3	69.3	69.3	69.3	69.3	69.3	69.3	69.3	69.3
64.000	69.3	69.3	69.3	69.3	69.3	69.3	69.3	69.3	69.3
68.000	69.3	69.3	69.3	69.3	69.3	69.3	69.3	69.3	69.3
72.000	69.3	69.3	69.3	69.3	69.3	69.3	69.3	69.3	69.3
72.375	69.3	69.3	69.3	69.3	69.3	69.3	69.3	69.3	69.3

Comparative Analysis (Negative Loads)

Table 6B PA-25 Horizontal Rolling Window XO Negative Design Loads
Based on Comparative Analysis with 3/16" Tempered Sentry Impact Glass
Test Report: ATL #0721.01-96
These units ***DO NOT*** require hurricane protecti

Window Width (inches)	Window Height(inches)								
	25	30	36	37.375	40	44	48	49.625	60
24.000	-70.0	-70.0	-70.0	-70.0	-70.0	-70.0	-70.0	-70.0	-70.0
25.500	-70.0	-70.0	-70.0	-70.0	-70.0	-70.0	-70.0	-70.0	-70.0
30.000	-70.0	-70.0	-70.0	-70.0	-70.0	-70.0	-70.0	-70.0	-70.0
36.000	-70.0	-70.0	-70.0	-70.0	-70.0	-70.0	-70.0	-70.0	-70.0
40.000	-70.0	-70.0	-70.0	-70.0	-70.0	-70.0	-70.0	-70.0	-70.0
44.000	-70.0	-70.0	-70.0	-70.0	-70.0	-70.0	-70.0	-70.0	-70.0
48.000	-70.0	-70.0	-70.0	-70.0	-70.0	-70.0	-70.0	-70.0	-70.0
52.125	-70.0	-70.0	-70.0	-70.0	-70.0	-70.0	-70.0	-70.0	-70.0
56.000	-70.0	-70.0	-70.0	-70.0	-70.0	-70.0	-70.0	-70.0	-70.0
60.000	-70.0	-70.0	-70.0	-70.0	-70.0	-70.0	-70.0	-70.0	-70.0
64.000	-70.0	-70.0	-70.0	-70.0	-70.0	-70.0	-70.0	-70.0	-70.0
68.000	-70.0	-70.0	-70.0	-70.0	-70.0	-70.0	-70.0	-70.0	-70.0
72.000	-70.0	-70.0	-70.0	-70.0	-70.0	-70.0	-70.0	-70.0	-70.0
72.375	-70.0	-70.0	-70.0	-70.0	-70.0	-70.0	-70.0	-70.0	-70.0

Binnings Pan American
P.O. Box 630038
2805 N.E. 185th Street
Miami, Florida 33163
(305)931-2350

PA-25 HORIZONTAL ROLLER XO/OX LOAD RESULTS

Sheet: 6 of 8 — Revision Level: B — Series/Model: PA-25 — Prod Category: H.S. — Draw Class: CALCS — Drawing Number: PA-25DC — Engineer Name & Number: William M. Meyers P.E. #18755

CHANGED AS PER DADE REQUEST. — PJS — Date: 12/10/97
CHANGED AS PER DADE REQUEST. — PJS — Date: 4/3/98

WALTER E. FISHER
WILLIAM M. MEYERS P.E.
Consulting Engineers
9300 N.E. 6th Ave C-200
Miami Shores, FL 33138
(305) 758-3117 557-4006 Fax 362-628

FLA. 18755
STRUCTURAL
Date: 05/25/01

APPROVED AS COMPLYING WITH THE SOUTH FLORIDA BUILDING CODE
DATE March 29, 2001
BY Manuel Perez
PRODUCT CONTROL DIVISION
BUILDING CODE COMPLIANCE OFFICE
ACCEPTANCE NO. 01-0129.11

Comparative Analysis (Positive Loads)

Table 7A PA-25 Horizontal Rolling Window XOX Positive Design Loads with Water Requirement

Based on Comparative Analysis with 1/8" Annealed Glass

Test Report: ATL #0513.01-97-Unit A

These units *DO* require hurricane protection

Window Width (inches)	Window Height (inches)								
	25	30	36	37.375	40	44	48	49.625	60
72.000	69.3	61.1	50.0	48.0	44.6	40.3			
84.000	59.4	54.5	44.6	42.8					
96.000	46.9	44.8							
105.375									
108.000									

Comparative Analysis (Negative Loads)

Table 7B PA-25 Horizontal Rolling Window XOX Negative Design Loads

Based on Comparative Analysis with 1/8" Annealed Glass

Test Report: ATL #0513.01-97-Unit A

These units *DO* require hurricane protection

Window Width (inches)	Window Height (inches)								
	25	30	36	37.375	40	44	48	49.625	60
72.000	-74.9	-61.1	-50.0	-48.0	-44.6	-40.3			
84.000	-59.4	-54.5	-44.6	-42.8					
96.000	-46.9	-44.8							
105.375									
108.000									

Comparative Analysis (Positive Loads)

Table 8A PA-25 Horizontal Rolling Window XOX Positive Design Loads with Water Requirement

Based on Comparative Analysis with 1/8" Tempered Glass

Test Report: ATL #0513.01-97-Unit C

These units *DO* require hurricane protection

Window Width (inches)	Window Height (inches)								
	25	30	36	37.375	40	44	48	49.625	60
72.000	69.3	69.3	69.3	69.3	69.3	69.3	69.3	69.3	69.3
84.000	69.3	69.3	69.3	69.3	69.3	69.3	69.3	69.3	69.3
96.000	69.3	69.3	69.3	69.3	69.3	69.3	69.3	69.3	69.3
105.375	69.3	69.3	69.3	69.3	69.3	69.3	69.3	69.3	69.3
108.000	69.3	69.3	69.3	69.3	69.3	69.3	69.3	69.3	69.3

Comparative Analysis (Negative Loads)

Table 8B PA-25 Horizontal Rolling Window XOX Negative Design Loads

Based on Comparative Analysis with 1/8" Tempered Glass

Test Report: ATL #0513.01-97-Unit B

These units *DO* require hurricane protection

Window Width (inches)	Window Height (inches)								
	25	30	36	37.375	40	44	48	49.625	60
72.000	-120.0	-120.0	-120.0	-120.0	-120.0	-120.0	-120.0	-120.0	-95.3
84.000	-120.0	-120.0	-120.0	-120.0	-120.0	-120.0	-120.0	-120.0	-87.7
96.000	-120.0	-120.0	-114.5	-113.4	-111.2	-108.0	-105.0	-103.8	-82.9
105.375	-105.7	-101.8	-97.4	-96.5	-94.8	-92.2	-89.8	-88.9	-75.7
108.000	-101.1	-97.4	-93.3	-92.5	-90.8	-88.4	-86.2	-81.7	-65.5

Comparative Analysis (Positive Loads)

Table 9A PA-25 Horizontal Rolling Window XOX Positive Design Loads with Water Requirement

Based on Comparative Analysis with 3/16" Tempered Glass

Test Report: ATL #0513.01-97-Unit C

These units *DO* require hurricane protection

Window Width (inches)	Window Height (inches)								
	25	30	36	37.375	40	44	48	49.625	60
72.000	69.3	69.3	69.3	69.3	69.3	69.3	69.3	69.3	69.3
84.000	69.3	69.3	69.3	69.3	69.3	69.3	69.3	69.3	69.3
96.000	69.3	69.3	69.3	69.3	69.3	69.3	69.3	69.3	69.3
105.375	69.3	69.3	69.3	69.3	69.3	69.3	69.3	69.3	69.3
108.000	69.3	69.3	69.3	69.3	69.3	69.3	69.3	69.3	69.3

Comparative Analysis (Negative Loads)

Table 9B PA-25 Horizontal Rolling Window XOX Negative Design Loads

Based on Comparative Analysis with 3/16" Tempered Glass

Test Report: ATL #0513.01-97-Unit C

These units *DO* require hurricane protection

Window Width (inches)	Window Height (inches)								
	25	30	36	37.375	40	44	48	49.625	60
72.000	-120.0	-120.0	-120.0	-120.0	-120.0	-120.0	-120.0	-120.0	-101.3
84.000	-120.0	-120.0	-120.0	-120.0	-120.0	-120.0	-120.0	-120.0	-93.2
96.000	-120.0	-120.0	-120.0	-120.4	-118.1	-114.8	-111.6	-110.3	-88.1
105.375	-112.3	-108.1	-103.5	-102.5	-100.7	-98.0	-95.4	-94.4	-85.2
108.000	-107.4	-103.5	-99.2	-98.2	-96.5	-93.9	-91.5	-90.6	-85.0

Comparative Analysis (Positive Loads)

Table 10A PA-25 Horizontal Rolling Window XOX Positive Design Loads with Water Requirement

Based on Comparative Analysis with 3/16" Tempered Glass and ***Steel Rienforcement***

Test Report: ATL #0513.01-97-Unit D

These units *DO* require hurricane protection

Window Width (inches)	Window Height (inches)								
	25	30	36	37.375	40	44	48	49.625	60
72.000	69.3	69.3	69.3	69.3	69.3	69.3	69.3	69.3	69.3
84.000	69.3	69.3	69.3	69.3	69.3	69.3	69.3	69.3	69.3
96.000	69.3	69.3	69.3	69.3	69.3	69.3	69.3	69.3	69.3
105.375	69.3	69.3	69.3	69.3	69.3	69.3	69.3	69.3	69.3
108.000	69.3	69.3	69.3	69.3	69.3	69.3	69.3	69.3	69.3

Comparative Analysis (Negative Loads)

Table 10B PA-25 Horizontal Rolling Window XOX Negative Design Loads

Based on Comparative Analysis with 3/16" Tempered Glass and ***Steel Rienforcement***

Test Report: ATL #0513.01-97-Unit D

These units *DO* require hurricane protection

Window Width (inches)	Window Height (inches)								
	25	30	36	37.375	40	44	48	49.625	60
72.000	-120.0	-120.0	-120.0	-120.0	-120.0	-120.0	-120.0	-120.0	-119.1
84.000	-120.0	-120.0	-120.0	-120.0	-120.0	-120.0	-120.0	-120.0	-109.7
96.000	-120.0	-120.0	-120.0	-120.0	-120.0	-120.0	-120.0	-120.0	-103.7
105.375	-120.0	-120.0	-120.0	-120.0	-118.4	-115.3	-112.3	-111.1	-100.3
108.000	-120.0	-120.0	-116.7	-115.6	-113.5	-110.5	-107.7	-106.6	-100.0

Comparative Analysis (Positive Loads)

Table 11A PA-25 Horizontal Rolling Window *XOX EGRESS* Positive Design Loads with Water Requirement

Based on Comparative Analysis with 3/16" Tempered Glass

Test Report: ATL #0513.01-97-Unit J

These units *DO* require hurricane protection

Window Width (inches)	Window Height (inches)								
	25	30	36	37.375	40	44	48	49.625	60
72.000	69.3	69.3	69.3	69.3	69.3	69.3	69.3	69.3	69.3
84.000	69.3	69.3	69.3	69.3	69.3	69.3	69.3	69.3	69.3
96.000	69.3	69.3	69.3	69.3	69.3	69.3	69.3	69.3	69.3
105.375	69.3	69.3	69.3	69.3	69.3	69.3	69.3	69.3	69.3
108.000	69.3	69.3	69.3	69.3	69.3	69.3	69.3	69.3	69.3

Comparative Analysis (Negative Loads)

Table 11B PA-25 Horizontal Rolling Window *XOX EGRESS* Negative Design Loads

Based on Comparative Analysis with 3/16" Tempered Glass

Test Report: ATL #0513.01-97-Unit J

These units *DO* require hurricane protection

Window Width (inches)	Window Height (inches)								
	25	30	36	37.375	40	44	48	49.625	60
72.000	-120.0	-120.0	-120.0	-120.0	-120.0	-120.0	-120.0	-120.0	-101.3
84.000	-120.0	-120.0	-120.0	-120.0	-120.0	-120.0	-120.0	-120.0	-93.2
96.000	-120.0	-120.0	-120.0	-120.0	-118.1	-114.8	-111.6	-110.3	-88.1
105.375	-112.3	-108.1	-103.5	-102.5	-100.7	-98.0	-95.4	-94.4	-85.2
108.000	-107.4	-103.5	-99.2	-98.2	-96.5	-93.9	-91.5	-90.6	-85.0

ROBT. E. FISHER
WM. M. MEYERS, P.E.
Consulting Engineers
9301 N.E. 6th Ave. C-300
Miami Shores, FL 33138
(305) 758-3117 557-4006 Fax 362-6282

P.O. Box 630038
2805 N.E. 185th Street
Miami, Florida 33163
(305)931-2350

Binnings Pan American

PA

Revisions: A–CHANGED AS PER DADE COUNTYS' REQUEST OF 3/12/98. B–CHANGED AS PER DADE COUNTYS' REQUEST 3/31/98.

Drawn Class: CALCS

Part Class: ____

Prod. Category: H.S.

Series/Model: PA–25

Item:

Sheet: 7 of 8

Revision Level: B

PA-25 HORIZONTAL ROLLER XOX LOAD RESULTS

Drawing Number: PA–250C

Engineer Name & Number: William M. Myers R.E. #18755

Date: 12/10/97

Date: 4/3/98

Material:

Drawn By: PJS

Revised By: PJS

FLA. 18755
STRUCTURAL

Date: 05/25/01

APPROVED AS COMPLYING WITH THE SOUTH FLORIDA BUILDING CODE
DATE March 29, 2001
BY Manuel Serra
PRODUCT CONTROL DIVISION
BUILDING CODE COMPLIANCE OFFICE
ACCEPTANCE NO. 01-0129.11

Comparative Analysis (Positive Loads)

Table 12A PA-25 Horizontal Rolling Window XOX Positive Design Loads with Water Requirement

Based on Comparative Analysis with 1/8" Tempered Sentry Impact Glass

Test Report: ATL #1108.01-96

These units ***DO NOT*** require hurricane protection

Window Width (inches)	Window Height (inches)								
	25	30	36	37.375	40	44	48	49.625	60
72.000	62.0	62.0	62.0	62.0	62.0	62.0	62.0	62.0	62.0
84.000	62.0	62.0	62.0	62.0	62.0	62.0	62.0	62.0	62.0
96.000	62.0	62.0	62.0	62.0	62.0	62.0	62.0	62.0	62.0
105.375	62.0	62.0	62.0	62.0	62.0	62.0	62.0	62.0	62.0
108.000	62.0	62.0	62.0	62.0	62.0	62.0	62.0	62.0	62.0

Comparative Analysis (Negative Loads)

Table 12B PA-25 Horizontal Rolling Window XOX Negative Design Loads

Based on Comparative Analysis with 1/8" Tempered Sentry Impact Glass

Test Report: ATL #1108.01-96

These units ***DO NOT*** require hurricane protection

Window Width (inches)	Window Height (inches)								
	25	30	36	37.375	40	44	48	49.625	60
72.000	-84.0	-84.0	-84.0	-84.0	-84.0	-84.0	-84.0	-84.0	-84.0
84.000	-84.0	-84.0	-84.0	-84.0	-84.0	-84.0	-84.0	-84.0	-84.0
96.000	-84.0	-84.0	-84.0	-84.0	-84.0	-84.0	-84.0	-84.0	-84.0
105.375	-84.0	-84.0	-84.0	-84.0	-84.0	-84.0	-84.0	-84.0	-75.7
108.000	-84.0	-84.0	-84.0	-84.0	-84.0	-84.0	-84.0	-81.7	-65.5

Comparative Analysis (Positive Loads)

Table 13A PA-25 Horizontal Rolling Window XOX Positive Design Loads with Water Requirement

Based on Comparative Analysis with 3/16" Annealed Sentry Impact Glass

Test Report: ATL #1108.01-96

These units ***DO NOT*** require hurricane protection

Window Width (inches)	Window Height (inches)								
	25	30	36	37.375	40	44	48	49.625	60
72.000	45.0	45.0	45.0	45.0	45.0	45.0	45.0	45.0	45.0
84.000	45.0	45.0	45.0	45.0	45.0	45.0	45.0	45.0	45.0
96.000	45.0	45.0	45.0	45.0	45.0	45.0	45.0	45.0	40.9
105.375	45.0	45.0	45.0	45.0	45.0	45.0	45.0	44.4	
108.000	45.0	45.0	45.0	45.0	45.0	45.0	41.3		

Comparative Analysis (Negative Loads)

Table 13B PA-25 Horizontal Rolling Window XOX Negative Design Loads

Based on Comparative Analysis with 3/16" Annealed Sentry Impact Glass

Test Report: ATL #1108.01-96

These units ***DO NOT*** require hurricane protection

Window Width (inches)	Window Height (inches)								
	25	30	36	37.375	40	44	48	49.625	60
72.000	-45.0	-45.0	-45.0	-45.0	-45.0	-45.0	-45.0	-45.0	-45.0
84.000	-45.0	-45.0	-45.0	-45.0	-45.0	-45.0	-45.0	-45.0	-45.0
96.000	-45.0	-45.0	-45.0	-45.0	-45.0	-45.0	-45.0	-45.0	-40.9
105.375	-45.0	-45.0	-45.0	-45.0	-45.0	-45.0	-45.0	-44.4	
108.000	-45.0	-45.0	-45.0	-45.0	-45.0	-45.0	-41.3		

Comparative Analysis (Positive Loads)

Table 14A PA-25 Horizontal Rolling Window XOX Positive Design Loads with Water Requirement

Based on Comparative Analysis with 3/16" Tempered Sentry Impact Glass

Test Report: ATL #1108.01-96

These units ***DO NOT*** require hurricane protection

Window Width (inches)	Window Height (inches)								
	25	30	36	37.375	40	44	48	49.625	60
72.000	62.0	62.0	62.0	62.0	62.0	62.0	62.0	62.0	62.0
84.000	62.0	62.0	62.0	62.0	62.0	62.0	62.0	62.0	62.0
96.000	62.0	62.0	62.0	62.0	62.0	62.0	62.0	62.0	62.0
105.375	62.0	62.0	62.0	62.0	62.0	62.0	62.0	62.0	62.0
108.000	62.0	62.0	62.0	62.0	62.0	62.0	62.0	62.0	62.0

Comparative Analysis (Negative Loads)

Table 14B PA-25 Horizontal Rolling Window XOX Negative Design Loads

Based on Comparative Analysis with 3/16" Tempered Sentry Impact Glass

Test Report: ATL #1108.01-96

These units ***DO NOT*** require hurricane protection

Window Width (inches)	Window Height (inches)								
	25	30	36	37.375	40	44	48	49.625	60
72.000	-84.0	-84.0	-84.0	-84.0	-84.0	-84.0	-84.0	-84.0	-84.0
84.000	-84.0	-84.0	-84.0	-84.0	-84.0	-84.0	-84.0	-84.0	-84.0
96.000	-84.0	-84.0	-84.0	-84.0	-84.0	-84.0	-84.0	-84.0	-84.0
105.375	-84.0	-84.0	-84.0	-84.0	-84.0	-84.0	-84.0	-84.0	-84.0
108.000	-84.0	-84.0	-84.0	-84.0	-84.0	-84.0	-84.0	-84.0	-84.0

ROBT. E. FISHER
WM. M. MEYERS, P.E.
Consulting Engineers
9301 N.E. 6th Ave. C-300
Miami Shores, FL 33138
(305) 758-3117 557-4006 Fax 362-628:

Binnings Pan American
P.O. Box 630038
2805 N.E. 185th Street
Miami, Florida 33163
(305)931-2350

Revisions:
A-CHANGED AS PER DADE COUNTYS' REQUEST OF 3/20/98.
B-CHANGED AS PER DADE COUNTYS' REQUEST OF 3/31/98.

Drawn Class: CALCS
Part Class: —
Prod. Category: H.S.
Series/Model: PA-25
Item:
Sheet: 8 of 8

PA-25 HORIZONTAL ROLLER
XOX LOAD RESULTS

Engineer Name & Number: William M. Myers R.E. #18755
Drawing Number: PA-25DC
Revision Level: B

Materials:
Drawn By: PJS Date: 12/10/97
Revised By: PJS Date: 4/3/98

FLA. 18755
STRUCTURAL
Date: 05/25/01

APPROVED AS COMPLYING WITH THE SOUTH FLORIDA BUILDING CODE
DATE March 29, 2001
BY Manuel Perez
PRODUCT CONTROL DIVISION
BUILDING CODE COMPLIANCE OFFICE
ACCEPTANCE NO. 01-0129.11