MIAMI-DADE

MIAMI-DADE COUNTY, FLORIDA
METRO-DADE FLAGLER BUILDING

BUILDING CODE COMPLIANCE OFFICE
METRO-DADE FLAGLER BUILDING
140 WEST FLAGLER STREET, SUITE 1603
MIAMI, FLORIDA 33130-1563
(305) 375-2901 FAX (305) 375-2908

CONTRACTOR LICENSING SECTION
(305) 375-2527 FAX (305) 375-2558

CONTRACTOR ENFORCEMENT DIVISION
(305) 375-2966 FAX (305) 375-2908

PRODUCT CONTROL DIVISION
(305) 375-2902 FAX (305) 372-6339

PRODUCT CONTROL NOTICE OF ACCEPTANCE

JB Garage Door, Inc.
12195 N.W. 98 Avenue
Hialeah Gardens ,FL 33018

Your application for Notice of Acceptance (NOA) of:
Steel Overhead Garage Door
under Chapter 8 of the Code of Miami-Dade County governing the use of Alternate Materials and Types of Construction, and completely described herein, has been recommended for acceptance by the Miami-Dade County Building Code Compliance Office (BCCO) under the conditions specified herein.

This NOA shall not be valid after the expiration date stated below. BCCO reserves the right to secure this product or material at any time from a jobsite or manufacturer's plant for quality control testing. If this product or material fails to perform in the approved manner, BCCO may revoke, modify, or suspend the use of such product or material immediately. BCCO reserves the right to revoke this approval, if it is determined by BCCO that this product or material fails to meet the requirements of the South Florida Building Code.

The expense of such testing will be incurred by the manufacturer.

ACCEPTANCE NO.: 01-0129.16
EXPIRES: 04/04/2006

Raul Rodriguez
Chief Product Control Division

THIS IS THE COVERSHEET, SEE ADDITIONAL PAGES FOR SPECIFIC AND GENERAL CONDITIONS
BUILDING CODE & PRODUCT REVIEW COMMITTEE

This application for Product Approval has been reviewed by the BCCO and approved by the Building Code and Product Review Committee to be used in Miami-Dade County, Florida under the conditions set forth above.

Francisco J. Quintana, R.A.
Director
Miami-Dade County
Building Code Compliance Office

APPROVED: 03/29/2001

JB Garage Door, Inc.

ACCEPTANCE No.	:	01-0129.16
APPROVED	:	MAR 2 9 2001
EXPIRES	:	04/02/06

NOTICE OF ACCEPTANCE: SPECIFIC CONDITIONS

1. SCOPE

This renews the notice of Acceptance No. 98-1204.05, which was issued on 01/28/99. It approves a sectional steel garage door, as described in Section 2 of this Notice of Acceptance, designed to comply with the South Florida Building Code, 1994 Edition for Miami-Dade County. For the locations where the pressure requirements, as determined by SFBC Chapter 23, do not exceed the Design Pressure Rating values indicated in the approved drawings.

2. PRODUCT DESCRIPTION

The **JB sectional steel garage door** and its components shall be constructed in strict compliance with the following documents: Drawing No. 95-17, titled "Steel Overhead Garage Door," prepared by Al-Farooq Corporation, dated 04/20/95, revised 11/04/98, sheets 1 through 3 of 3, bearing the Miami-Dade County Product Control Approval stamp with the Notice of Acceptance number and approval date by the Miami-Dade County Product Control Division. These documents shall hereinafter be referred to as the approved drawings.

3. LIMITATIONS

This approval requires the manufacturer to do testing of all coils used to fabricate door panels under this Notice of Acceptance. A minimum of 2 specimens shall be cut from each coil and tensile tested according to ASTM E-8 by a Dade County approved laboratory selected and paid by the manufacturer. Every 3 months, four times a year, the manufacturer shall mail to this office: a copy of the tested reports with confirmation that the specimens were selected from coils at the manufacturer production facilities. And a notarized statement from the manufacturer that only coils with yield strength of 49,000 psi or more shall be used to make door panels for Dade County under this Notice of Acceptance.

4. INSTALLATION

4.1 The sectional steel garage door and its components shall be installed in strict compliance with the approved drawings.

4.2 The installation of this product **will not require** a hurricane protection system.

4.3 Units with dimensions equal to or smaller than those shown in the approved drawings shall qualify under this approval.

5. LABELING

Each door shall bear a permanent label with the manufacturer's name or logo, city, state and following statement: "Miami-Dade County Product Control Approved".

6. BUILDING PERMIT REQUIREMENTS

6.1 Application for building permit shall be accompanied by copies of the following:

6.1.1 This Notice of Acceptance and duplicate copies of the approved drawings identified in Section 2, clearly marked to show the components selected for the proposed installation.

6.1.2 Any other documents required by the Building Official or the South Florida Building Code (SFBC) in order to properly evaluate the installation of this system.

Candido Font, PE. Sr. Product Control Examiner
Product Control Division

JB Garage Door, Inc.

ACCEPTANCE No.	:	**01-0129.16**
APPROVED	:	MAR 2 9 2001
EXPIRES	:	**04/02/06**

NOTICE OF ACCEPTANCE: SPECIFIC CONDITIONS

1 Renewal of this Acceptance (approval) shall be considered after a renewal application has been filed and the original submitted documents, including test-supporting data, engineering documents, are no older than eight (8) years.

2. Any and all approved products shall be permanently labeled with the manufacturer's name, city, state, and the following statement: "Miami-Dade County Product Control Approval", or as specifically stated in the specific conditions of this Acceptance.

3. Renewals of Acceptance will not be considered if:
   a. There has been a change in the South Florida Building Code affecting the evaluation of this product and the product is not in compliance with the code changes.
   b. The product is no longer the same product (identical) as the one originally approved.
   c. If the Acceptance holder has not complied with all the requirements of this acceptance, including the correct installation of the product.
   d. The engineer, who originally prepared, signed and sealed the required documentation initially submitted, is no longer practicing the engineering profession.

4. Any revision or change in the materials, use, and/or manufacture of the product or process shall automatically be cause for termination of this Acceptance, unless prior written approval has been requested (through the filing of a revision application with appropriate fee) and granted by this office.

5. Any of the following shall also be grounds for removal of this Acceptance:
   a. Unsatisfactory performance of this product or process.
   b. Misuse of this Acceptance as an endorsement of any product, for sales, advertising or any other purposes.

6. The Notice of Acceptance number preceded by the words Miami-Dade County, Florida, and followed by the expiration date may be displayed in advertising literature. If any portion of the Notice of Acceptance is displayed, then it shall be done in its entirety.

7. A copy of this Acceptance as well as approved drawings and other documents, where it applies, shall be provided to the user by the manufacturer or its distributors and shall be available for inspection at the job site at all time. The engineer needs not reseal the copies.

8. Failure to comply with any section of this Acceptance shall be cause for termination and removal of Acceptance.

9. This Notice of Acceptance consists of pages 1, 2 and this last page 3.

END OF THIS ACCEPTANCE

Candido Font, PE. Sr. Product Control Examiner
Product Control Division

JB Garage Door, Inc.

ACCEPTANCE No. : **01-0129.16**

APPROVED : MAR 2 9 2001

EXPIRES : **04/02/06**

NOTICE OF ACCEPTANCE: EVIDENCE SUBMITTED

(For File ONLY. Not part of NOA.)

A. DRAWINGS

1. *Drawing prepared by Al-Farooq Corporation, titled "Steel Overhead Garage Door," Drawing No. 95-17, dated 04/20/95, with latest revision on 11/04/98, sheets 1 through 3 of 3, signed and sealed by Dr. Humayoun Farooq, PE.*

B. TESTS

1. *Test report on uniform static air pressure test, prepared by Hurricane Engineering & Testing Inc., Report No. HETI-95-446, dated May 2, 1995, signed and sealed by Hector M. Medina, PE.*
2. *Test report on forced entry test, prepared by Hurricane Engineering & Testing Inc., Report No. HETI-95-446f, dated May 23, 1995, signed and sealed by Hector M. Medina, PE.*
3. *Test report on large missile impact test and cyclic wind pressure test, prepared by Hurricane Engineering & Testing Inc., Report No. HETI-95-453, dated May 23, 1995, signed and sealed by Hector M. Medina, PE.*
4. *Addendum to test report prepared by Hurricane Engineering & Testing Inc., Report No. HETI-95-453, dated June 26, 1995, signed and sealed by Hector M. Medina, PE.*

C. CALCULATIONS

1. *Calculations dated May 25, 1995, pages 1 through 4, prepared by Al-Farooq Corporation, signed and sealed by Dr. Humayoun Farooq, PE. on May 30, 1995.*
2. *Calculations dated June 24, 1995, page 5, prepared by Al-Farooq Corporation, signed and sealed by Dr. Humayoun Farooq, PE. on June 24, 1995.*

D. MATERIAL CERTIFICATIONS

1. *Tensile Test Report No. HETI 95-T84, prepared by Hurricane Engineering & Testing Inc., dated May 25, 1995, signed and sealed by Hector M. Medina, PE.*
2. *Notice of Acceptance issued to Apache Products Company on 11/26/98 expiring on 01/11/02.*

E. STATEMENTS

1. ***No-change letter issue by J.B. Garage Doors, Inc. on 01/23/2001, signed by R. Berger, and notarized by C.J. Prati on 01/23/2001.***

Candido Font, PE. Sr. Product Control Examiner
Product Control Division

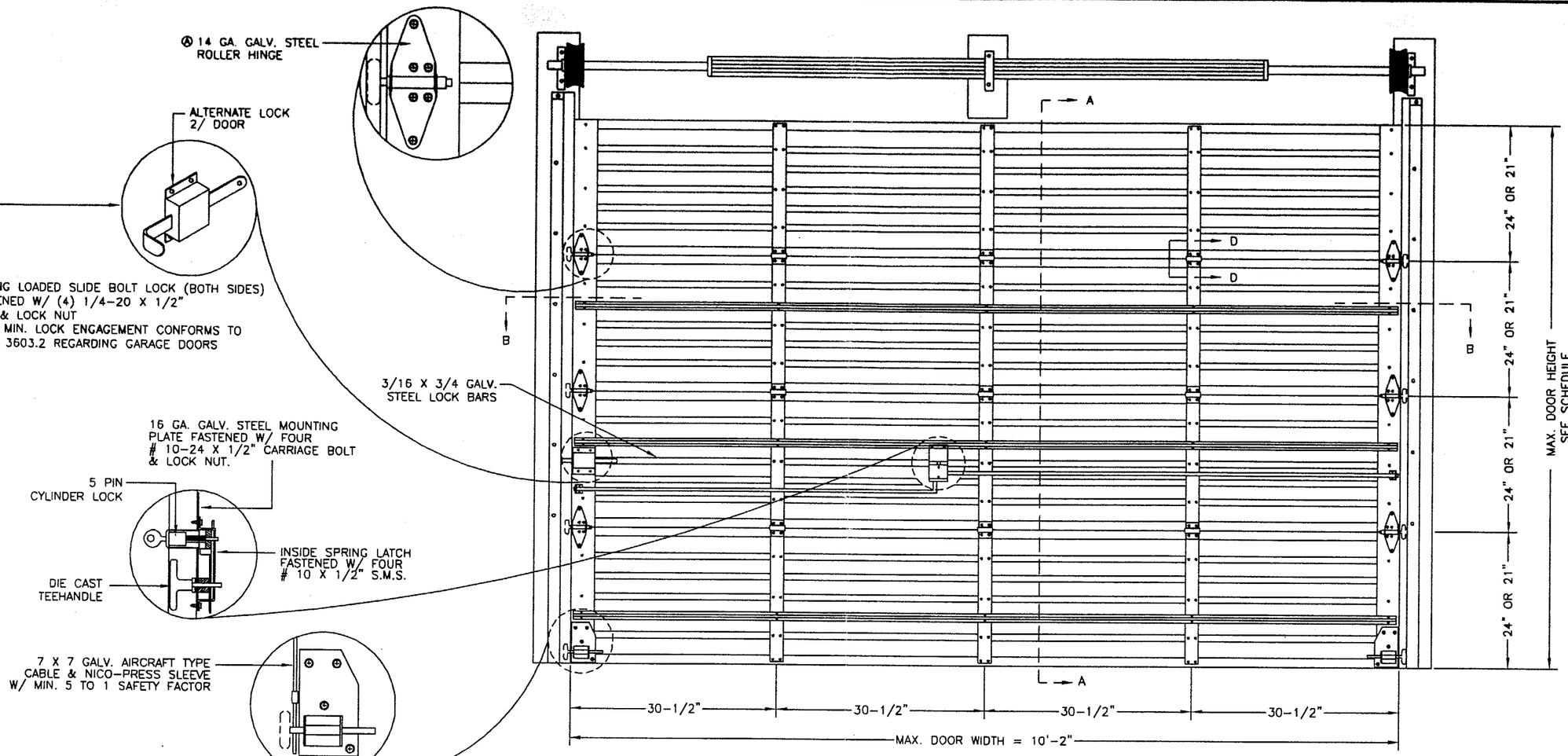

INSIDE ELEVATIONS

J.B. DOOR MODELS: 10'-2"W X 18'H MAX	
MODEL	DESCRIPTION
724	24 GA. ROLL FORMED STEEL DOOR
720	20 GA. ROLL FORMED STEEL DOOR

NOTE: MODEL 724 TESTED.

DESIGN PRESSURE RATING = + 60.0 PSF
− 66.7 PSF

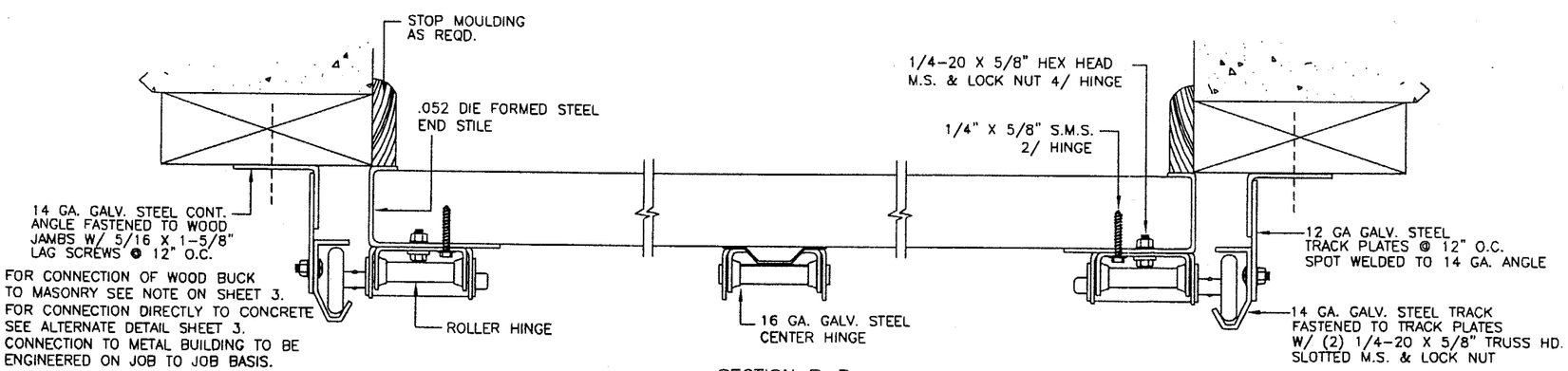

SECTION B–B

ENGINEER: HUMAYOUN FAROOQ
PE # 16557

JAN 1 8 2001

APPROVED AS COMPLYING WITH THE SOUTH FLORIDA BUILDING CODE
DATE 03-29-2001
BY
PRODUCT CONTROL DIVISION
BUILDING CODE COMPLIANCE OFFICE
ACCEPTANCE NO. 01-0129.06

AL-FAROOQ CORPORATION
ENGINEERS, PLANNERS & PRODUCT TESTING
1235 SW 87 AVE
MIAMI, FLORIDA 33174
(305) 264-8100

JBD9517G

STEEL OVERHEAD GARAGE DOOR

J.B. GARAGE DOORS INC.
12195 N.W. 98 TH. AVE.
HIALEAH GARDENS, FL. 33016
(305) 558 - 1658

revisions:

no	date	by	description
A	6.26.95	T.H.	END HINGE GAUGE ADD.
B	11.4.98		OPT. INSULATION ADDED

date: 04-20-95
scale: NONE
design by:
drawn by: HAMID
checked by:

drawing no. 95-17

sheet 1 of 3

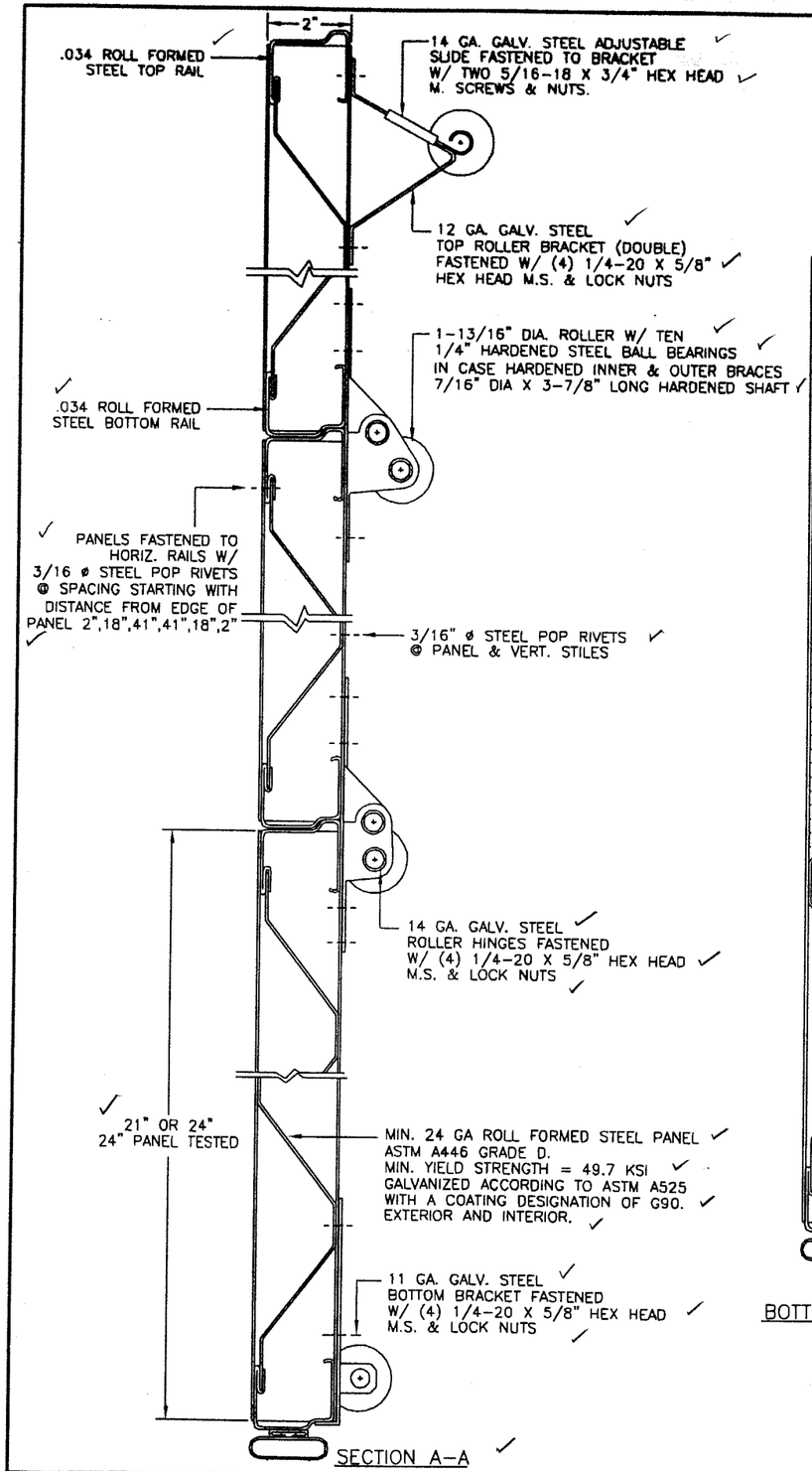

SECTION A-A

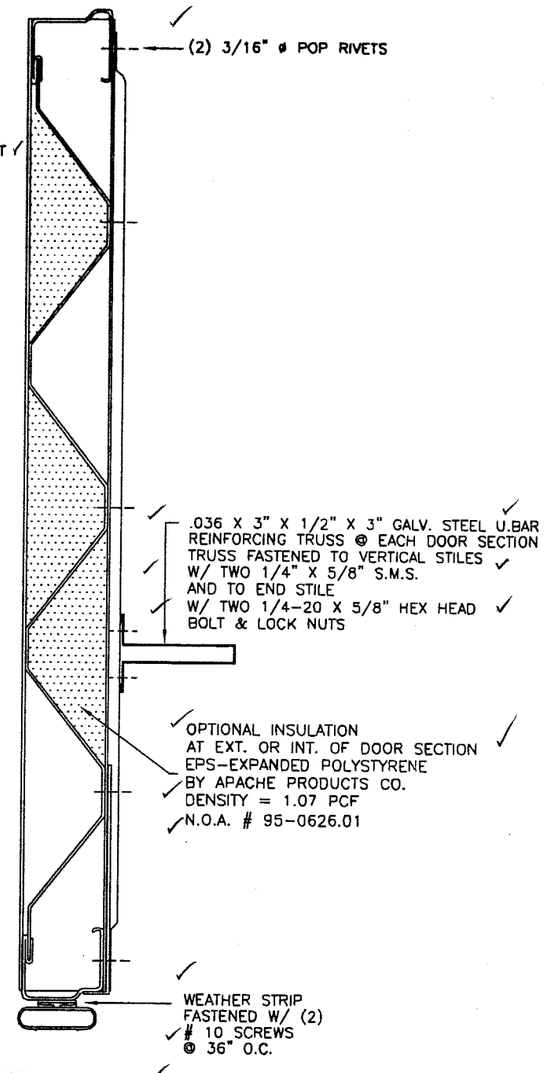

BOTTOM PANEL

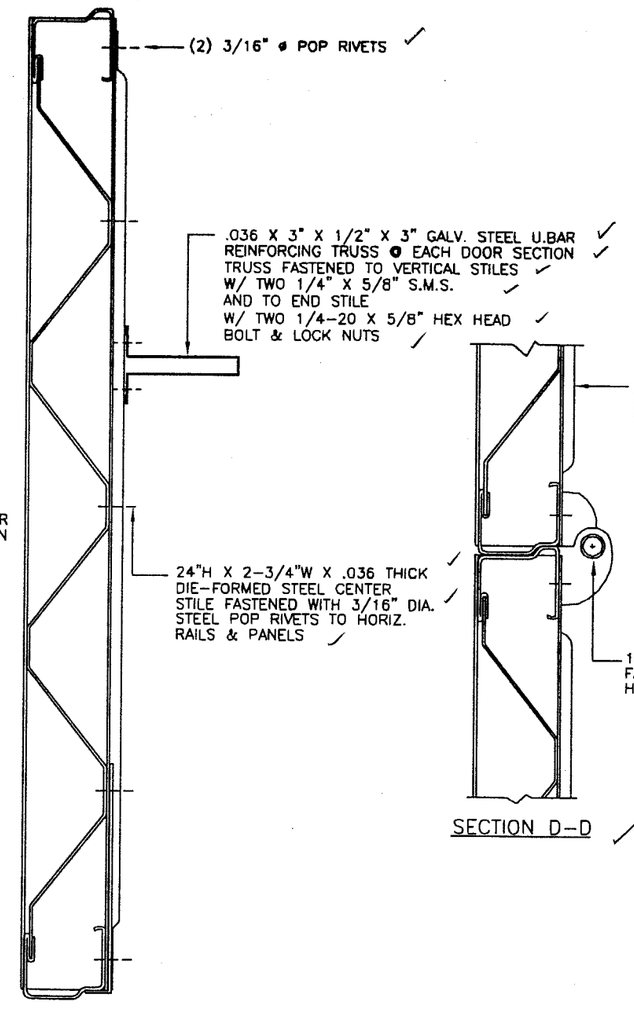

ALL INTERMEDIATE PANELS

TOP PANEL HAS NO REINFORCING TRUSS

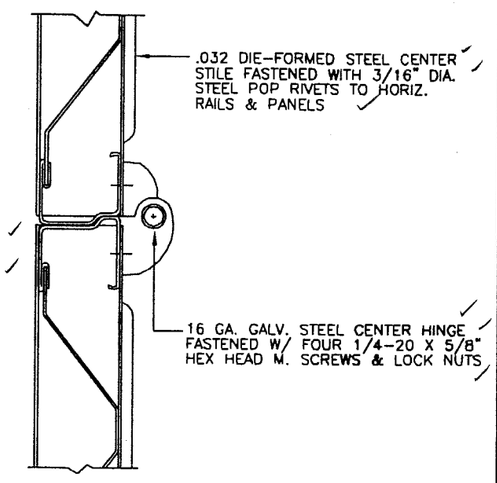

SECTION D-D

ENGINEER: HUMAYOUN FAROOQ
PE # 16557

JAN 1 9 2001

APPROVED AS COMPLYING WITH THE SOUTH FLORIDA BUILDING CODE
DATE 03-29-2001
BY
PRODUCT CONTROL DIVISION
BUILDING CODE COMPLIANCE OFFICE
ACCEPTANCE NO. 01-0129.16

a f c
AL-FAROOQ CORPORATION
ENGINEERS, PLANNERS & PRODUCT TESTING
1235 SW 87 AVE
MIAMI, FLORIDA 33174
(305) 264-8100
JBD9517G

STEEL OVERHEAD GARAGE DOOR

J.B. GARAGE DOORS INC.
12195 N.W. 98 TH. AVE.
HIALEAH GARDENS, FL. 33016
(305) 558 - 1658

revisions:

no	date	by	description
A	6.26.95	T.H.	GENERAL REVISION

date: 04-20-95
scale: NONE
design by:
drawn by: HAMID
checked by:

drawing no.
95-17

sheet 2 of 3

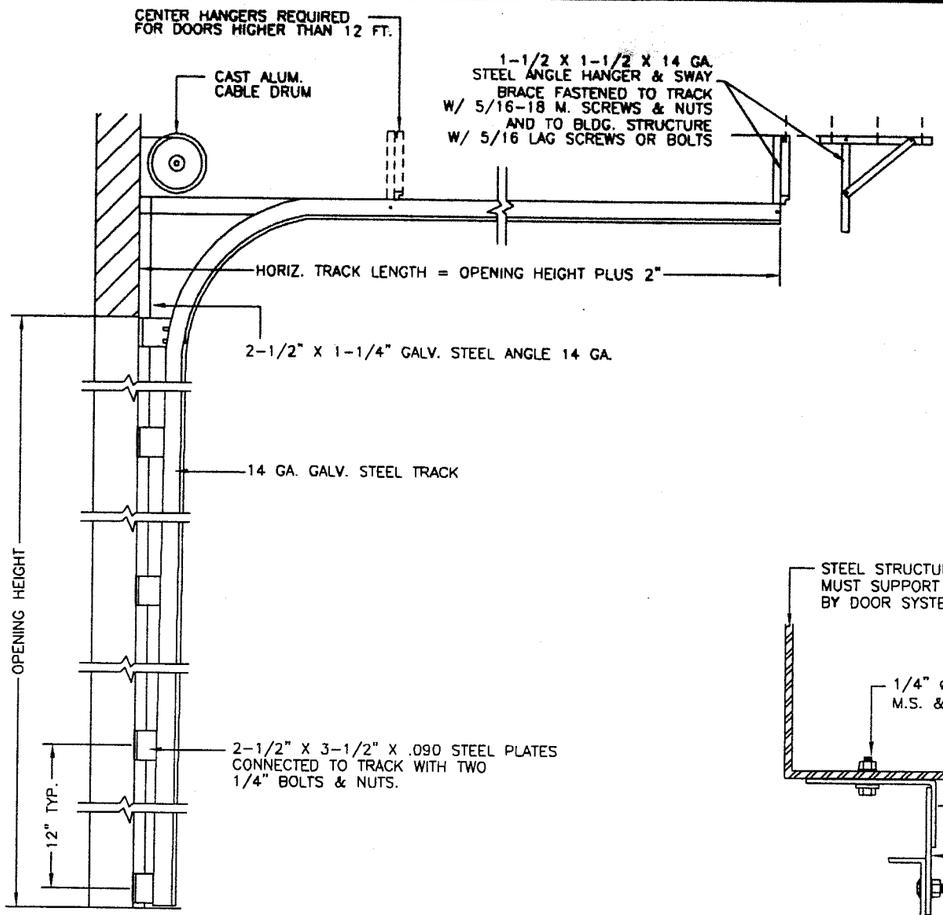

DOOR TRACK AS VIEWED FROM CENTER OF OPENING

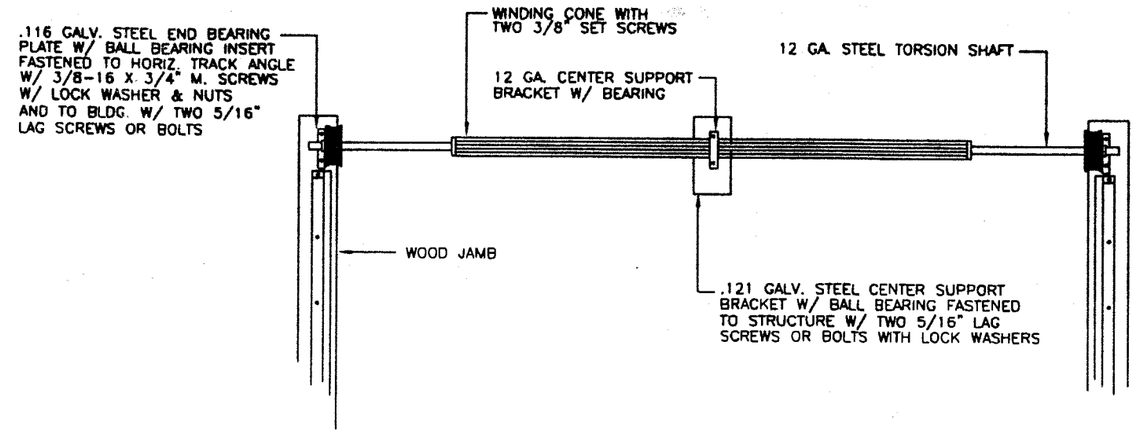

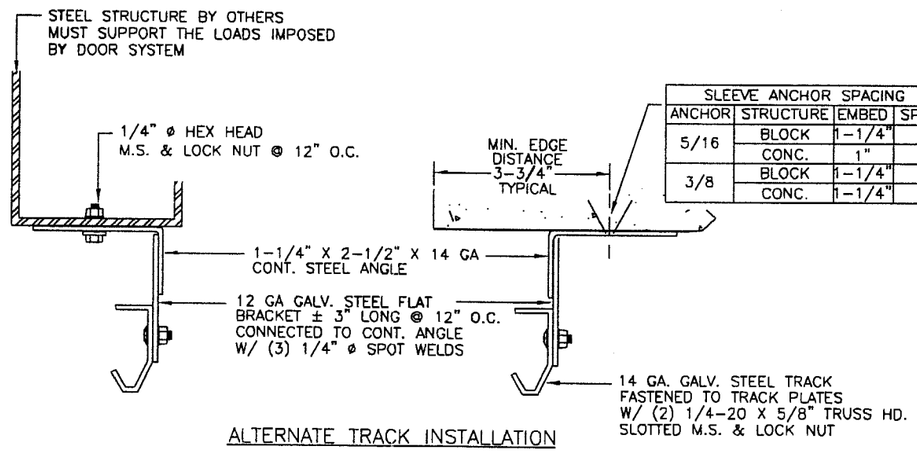

ALTERNATE TRACK INSTALLATION

SLEEVE ANCHOR SPACING			
ANCHOR	STRUCTURE	EMBED	SPACING
5/16	BLOCK	1-1/4"	6"
	CONC.	1"	6"
3/8	BLOCK	1-1/4"	8"
	CONC.	1-1/4"	10"

WOOD BUCK CONNECTION TO MASONRY

EACH TRACK SHALL BE SECURED WITH TRACK BRACKETS AT 12" O.C. FASTENED TO PRESSURE TREATED 2" X 6" WOOD JAMBS WHICH SHALL BE ANCHORED TO GROUTED REINFORCED MASONRY BLOCK WALL OR CONC. COLUMN W/ 1/4" DIA. TAPCONS WITH 1-3/4" EMBEDMENT AND A SPACING OF 11" O.C. THE BLOCK WALL CELLS SHALL BE REINFORCED W/ FOUR # 5 BARS EXTENDING INTO FOOTING AND INTO TIE BEAMS. ALL BARS SHALL BE CONTINUOUS FROM TIE BEAMS TO FOOTING.

PREPARATION OF JAMBS BY OTHERS

DOOR HEIGHT	NO. OF TRUSSES	SECTION HEIGHTS *								
		1ST	2ND	3RD	4TH	5TH	6TH	7TH	8TH	9TH
7'-0"	3	21"	21"	21"	21"	N/A	N/A	N/A	N/A	N/A
8'-0"	3	24"	24"	24"	24"	N/A	N/A	N/A	N/A	N/A
9'-0"	4	24"	21"	21"	21"	21"	N/A	N/A	N/A	N/A
10'-0"	4	24"	24"	24"	24"	24"	N/A	N/A	N/A	N/A
11'-0"	5	24"	24"	21"	21"	21"	21"	N/A	N/A	N/A
12'-0"	5	24"	24"	24"	24"	24"	24"	N/A	N/A	N/A
13'-0"	6	24"	24"	24"	21"	21"	21"	21"	N/A	N/A
14'-0"	6	24"	24"	24"	24"	24"	24"	24"	N/A	N/A
15'-0"	7	24"	24"	24"	24"	21"	21"	21"	21"	N/A
16'-0"	7	24"	24"	24"	24"	24"	24"	24"	24"	N/A
17'-0"	8	24"	24"	24"	24"	24"	21"	21"	21"	21"
18'-0"	8	24"	24"	24"	24"	24"	24"	24"	24"	24"

*-SECTIONS ARE NUMBERED STARTING AT THE BOTTOM

DESIGN PRESSURE RATING = + 60.0 PSF
− 66.7 PSF

ENGINEER: HUMAYOUN FAROOQ
PE # 16557

JAN 1 9 2001

APPROVED AS COMPLYING WITH THE SOUTH FLORIDA BUILDING CODE
DATE 03-29-2001
BY
PRODUCT CONTROL DIVISION
BUILDING CODE COMPLIANCE OFFICE
ACCEPTANCE NO. 01-0129.16

AL-FAROOQ CORPORATION
ENGINEERS, PLANNERS & PRODUCT TESTING
1235 SW 87 AVE
MIAMI, FLORIDA 33174
(305) 264-8100

JBD9517G

STEEL OVERHEAD GARAGE DOOR

J.B. GARAGE DOORS INC.
12195 N.W. 98 TH. AVE.
HIALEAH GARDENS, FL. 33016
(305) 558 - 1658

revisions:

no	date	by	description
A	6.26.95	T.H.	GENERAL REVISION

date: 04-20-95
scale: NONE
design by:
drawn by: HAMID
checked by:

drawing no. 95-17

sheet 3 of 3