MIAMI-DADE

MIAMI-DADE COUNTY, FLORIDA
METRO-DADE FLAGLER BUILDING

BUILDING CODE COMPLIANCE OFFICE
METRO-DADE FLAGLER BUILDING
140 WEST FLAGLER STREET, SUITE 1603
MIAMI, FLORIDA 33130-1563
(305) 375-2901 FAX (305) 375-2908

CONTRACTOR LICENSING SECTION
(305) 375-2527 FAX (305) 375-2558

CONTRACTOR ENFORCEMENT DIVISION
(305) 375-2966 FAX (305) 375-2908

PRODUCT CONTROL DIVISION
(305) 375-2902 FAX (305) 372-6339

PRODUCT CONTROL NOTICE OF ACCEPTANCE

Dixie Metal Products, Inc.
1471 Neptune Drive
Boynton Beach ,FL 33426

Your application for Notice of Acceptance (NOA) of:
Aluminum Picket Railing for Balcony and Stairs
under Chapter 8 of the Code of Miami-Dade County governing the use of Alternate Materials and Types of Construction, and completely described herein, has been recommended for acceptance by the Miami-Dade County Building Code Compliance Office (BCCO) under the conditions specified herein.

This NOA shall not be valid after the expiration date stated below. BCCO reserves the right to secure this product or material at any time from a jobsite or manufacturer's plant for quality control testing. If this product or material fails to perform in the approved manner, BCCO may revoke, modify, or suspend the use of such product or material immediately. BCCO reserves the right to revoke this approval, if it is determined by BCCO that this product or material fails to meet the requirements of the South Florida Building Code.

The expense of such testing will be incurred by the manufacturer.

ACCEPTANCE NO.: 01-0206.14
EXPIRES: 03/26/2006

Raul Rodriguez
Chief Product Control Division

THIS IS THE COVERSHEET, SEE ADDITIONAL PAGES FOR SPECIFIC AND GENERAL CONDITIONS
BUILDING CODE & PRODUCT REVIEW COMMITTEE

This application for Product Approval has been reviewed by the BCCO and approved by the Building Code and Product Review Committee to be used in Miami-Dade County, Florida under the conditions set forth above.

Francisco J. Quintana, R.A.
Director
Miami-Dade County
Building Code Compliance Office

APPROVED: 04/05/2001

Dixie Metal Products, Inc.

ACCEPTANCE No. : 01-0206.14

APPROVED : 04/05/2001

EXPIRES : 03/26/2006

NOTICE OF ACCEPTANCE: SPECIFIC CONDITIONS

1. SCOPE

This renews the Notice of Acceptance No. 97-0529.07, which was issued on March 26, 1998. It approves an aluminum picket railing for balcony and stairs as described in Section 2 of this Notice of Acceptance, designed to comply with the South Florida Building Code, 1994 Edition for Miami-Dade County, for the locations where the pressure requirements, as determined by SFBC Chapter 23, do not exceed the Design Pressure Rating values indicated in the approved drawings.

2. PRODUCT DESCRIPTION

This aluminum picket railing for balcony and stairs and its components shall be constructed in strict compliance with the following documents: Drawing No. DSR2, titled "Standard #2 Railing; Dixie Metal Products, Inc.", sheet 1 of 1, dated April 15, 1997, revision #1 dated March 6, 1998, and Drawing No. DSR11, titled "Standard #11 Railing; Dixie Metal Products, Inc.", sheets 1 and 2 of 2, dated April 15, 1997, all prepared by Arthur L. Bromley, P.E., Inc., bearing the Miami-Dade County Product Control Approval and Renewal stamps with the Notice of Acceptance numbers and approval dates by the Miami-Dade County Product Control Division. These documents shall hereinafter be referred to as the approved drawings.

3. LIMITATIONS

All permanent set components must be protected against corrosion, contamination and damage at all times. The structural adequacy of the supporting concrete slab and all other supporting structures is not part of this approval and shall be reviewed by the corresponding Building Department.

4. INSTALLATION

This aluminum picket railing for balcony and stairs and its components shall be installed in strict compliance with the approved drawings. The size of the hole in the slab shall be 3"x 3" minimum.

5. LABELING

This aluminum picket railing for balcony and stairs shall bear a permanent imprint/label with the manufacturer's name/logo, city, state and the following statement: "Miami-Dade County Product Control Approved".

6. BUILDING PERMIT REQUIREMENTS

6.1 Application for building permit shall be accompanied by copies of the following:

6.1.1 This Notice of Acceptance.

6.1.2 Duplicate copies of the approved drawings, as identified in Section 2 of this Notice of Acceptance, clearly marked to show the components selected for the proposed installation.

6.1.3 Any other documents required by the Building Official or the South Florida Building Code (SFBC) in order to properly evaluate the installation of this system.

Helmy A. Makar, P.E.- Product Control Examiner
Product Control Division

Dixie Metal Products, Inc.

ACCEPTANCE No. : 01-0206.14

APPROVED : 04/05/2001

EXPIRES : 03/26/2006

NOTICE OF ACCEPTANCE: STANDARD CONDITIONS

1 Renewal of this Acceptance (approval) shall be considered after a renewal application has been filed and the original submitted documents, including test-supporting data, engineering documents, are no older than eight (8) years.

2. Any and all approved products shall be permanently labeled with the manufacturer's name, city, state, and the following statement: "Miami-Dade County Product Control Approved", or as specifically stated in the specific conditions of this Acceptance.

3. Renewals of Acceptance will not be considered if:
   a. There has been a change in the South Florida Building Code affecting the evaluation of this product and the product is not in compliance with the code changes.
   b. The product is no longer the same product (identical) as the one originally approved.
   c. If the Acceptance holder has not complied with all the requirements of this acceptance, including the correct installation of the product.
   d. The engineer, who originally prepared, signed and sealed the required documentation initially submitted, is no longer practicing the engineering profession.

4. Any revision or change in the materials, use, and/or manufacture of the product or process shall automatically be cause for termination of this Acceptance, unless prior written approval has been requested (through the filing of a revision application with appropriate fee) and granted by this office.

5. Any of the following shall also be grounds for removal of this Acceptance:
   a. Unsatisfactory performance of this product or process.
   b. Misuse of this Acceptance as an endorsement of any product, for sales, advertising or any other purposes.

6. The Notice of Acceptance number preceded by the words Miami-Dade County, Florida, and followed by the expiration date may be displayed in advertising literature. If any portion of the Notice of Acceptance is displayed, then it shall be done in its entirety.

7. A copy of this Acceptance as well as approved drawings and other documents, where it applies, shall be provided to the user by the manufacturer or its distributors and shall be available for inspection at the job site at all time. The engineer needs not reseal the copies.

8. Failure to comply with any section of this Acceptance shall be cause for termination and removal of Acceptance.

9. This Notice of Acceptance consists of pages 1 through 3.

END OF THIS ACCEPTANCE

Helmy A. Makar, P.E.- Product Control Examiner
Product Control Division

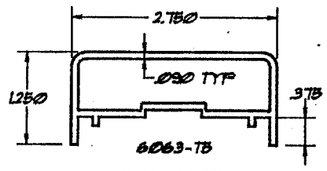

TOP RAIL

Ixx=.0647
Cx=.745 in
Iyy=.3690
Cy=1.375 in

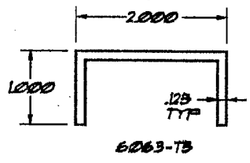

BTM RAIL

Ixx=.275879 in^4
Cx=1.0 in
Iyy=.043448 in^4
C=.724 in

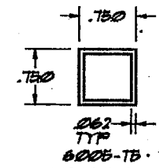

PICKET

I=.013652 in^4
C=.375 in

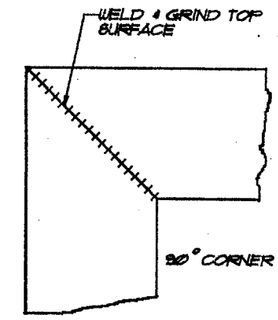

SECTION 'A'
ALL JOINTS TO BE FULL WELDED

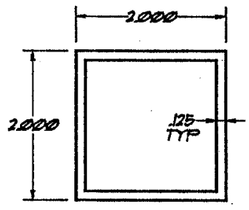

POST

I=.551758 in^4
C=1.0 in

PRODUCT RENEWED

ACCEPTANCE No. 01-0206.14
EXPIRATION DATE 03/26/2006
By Helmy A. Mak
PRODUCT CONTROL DIVISION
BUILDING CODE COMPLIANCE OFFICE

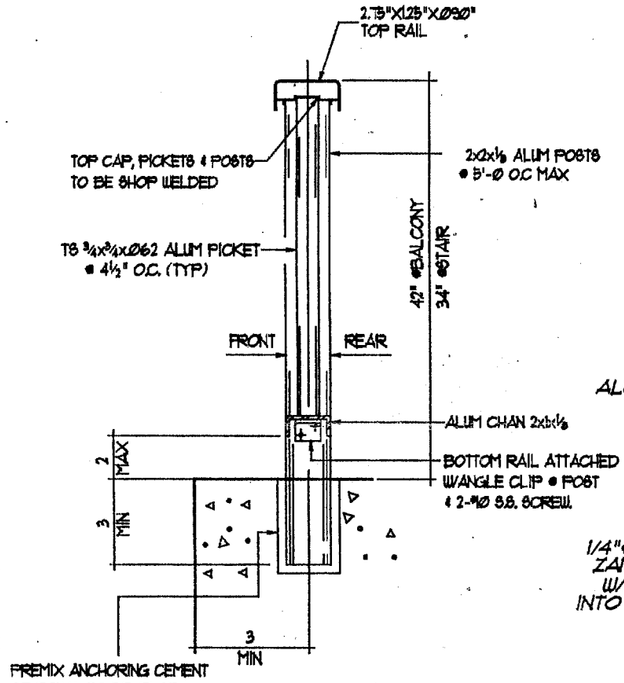

SECTION 'A'

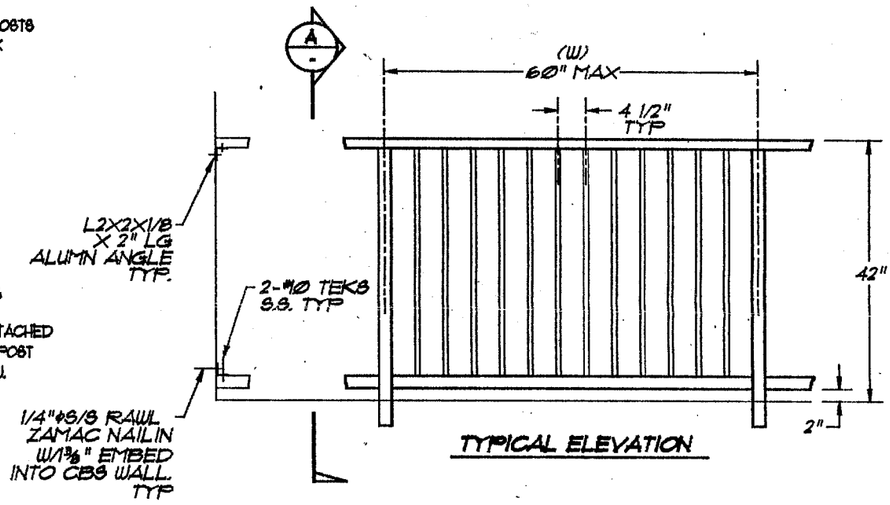

TYPICAL ELEVATION

William D. Cook, P.E.
 # 43904
Structural Engineer
3/6/98

APPROVED AS COMPLYING WITH THE SOUTH FLORIDA BUILDING CODE
DATE MARCH 26 1998
BY Helmy A. Mak
PRODUCT CONTROL DIVISION
BUILDING CODE COMPLIANCE OFFICE
ACCEPTANCE NO. 97-0529.07

NOTES:

1. THIS GUARD HAS BEEN DESIGNED TO COMPLY WITH THE REQUIRMENTS OF THE SOUTH FLA. BUILDING CODE FOR USE UP TO 350 FT. ABOVE GRADE.
2. ALL ALUMINUM TO BE OF ALLOYS AS SHOWN.
3. CONCRETE SHALL DEVELOP A MINIMUM COMPRESSIVE STRENGTH OF 2500 psi IN 28 DAYS.
4. IT SHALL BE DETERMINED BY CONTRACTOR THAT EXISTING STRUCTURE CAN SAFELY SUPPORT THE IMPOSED LOADS.
5. ALL FASTNERS SHALL BE STAINLESS STEEL.
6. ALL WELDING SHALL BE DONE IN ACCORDANCE WITH THE REQUIRMENTS OF THE A.W.S.
7. WIND LOAD AS PER ASCE 7-88 @ 110 MPH EXPOSURE-D. COMPONENTS AND CLADDING OTHER STRUCTURES.
   P = 141 PSF

NO	DATE	REVISIONS
1	3-6-98	

ARTHUR L. BROMLEY, P.E. INC.
WILLIAM D. COOK P.E. #43904
CONSULTING STRUCTURAL ENGINEER
2004 N.E. 49TH STREET
FORT LAUDERDALE, FL. 33308
(954)772-4624

STANDARD #2 RAILING CALCULATIONS.
FOR
DIXIE METAL PRODUCTS INC.
1471 NEPTUNE DRIVE.
BOYNTON BEACH, FL. 33426
(561)731-4555

SHEET No. 1 OF 1

DET. WK	DATE 4.15.97	JOB NO.	DSR2
CHK. WC	DATE 4.15.97		

FILE NAME: DIX8TD-A

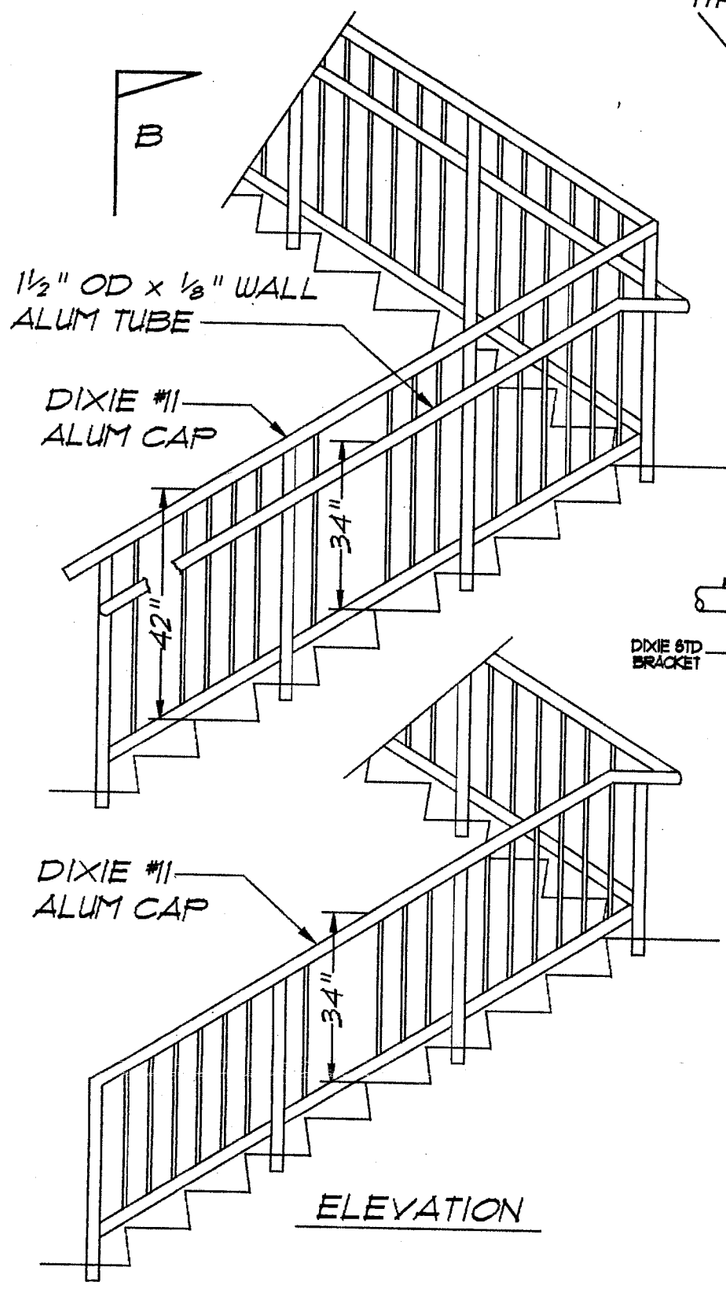

ELEVATION

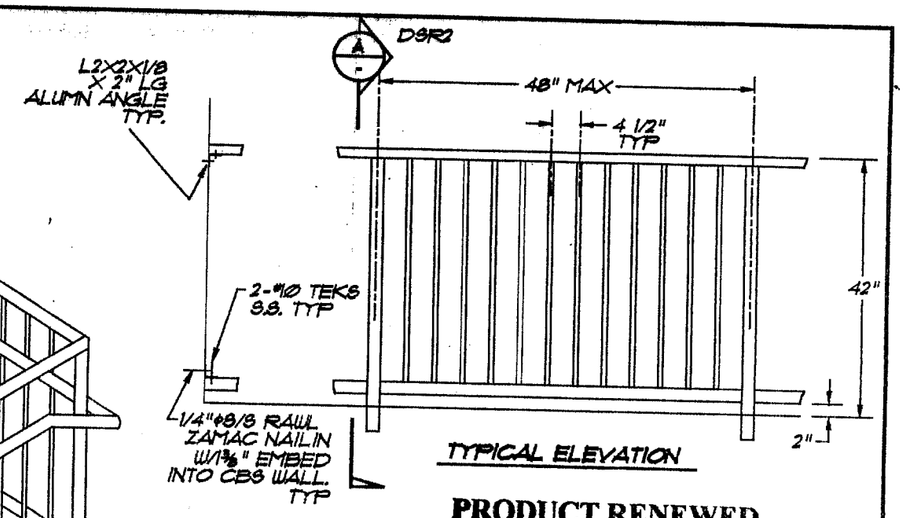

TYPICAL ELEVATION

PRODUCT RENEWED

ACCEPTANCE No. 01-0206.14

EXPIRATION DATE 03/26/2006

By Helmy A. Mehr

PRODUCT CONTROL DIVISION
BUILDING CODE COMPLIANCE OFFICE

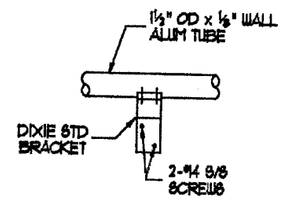

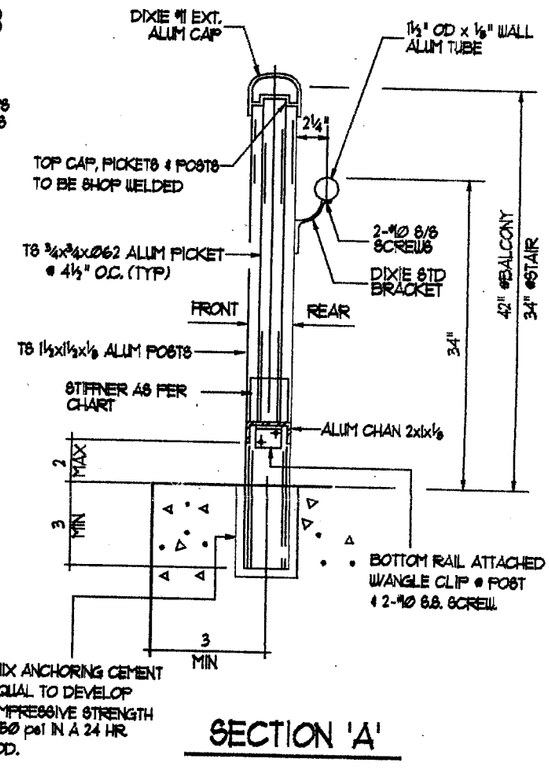

SECTION 'A'

MAXIMUM POST SPACING				
ELEVATION	BALCONY NO STIFF	BALCONY 17 3/8" STIFF	STAIR RAIL NO STIFF	STAIR RAIL 6" STIFF
0'-250'	31"	48"	35"	48"

APPROVED AS COMPLYING WITH THE
SOUTH FLORIDA BUILDING CODE
DATE MARCH 26 1998
BY Helmy A. Mehr
PRODUCT CONTROL DIVISION
BUILDING CODE COMPLIANCE OFFICE
ACCEPTANCE NO. 97-0529.07

NOTES:

1. THIS GUARD HAS BEEN DESIGNED TO COMPLY WITH THE REQUIRMENTS OF THE SOUTH FLA. BUILDING CODE FOR USE UP TO 250 FT. ABOVE GRADE.
2. ALL ALUMINUM TO BE OF ALLOYS AS SHOWN.
3. CONCRETE SHALL DEVELOP A MINIMUM COMPRESSIVE STRENGTH OF 2500 psi IN 28 DAYS.
4. IT SHALL BE DETERMINED BY CONTRACTOR THAT EXISTING STRUCTURE CAN SAFELY SUPPORT THE IMPOSED LOADS.
5. ALL FASTNERS SHALL BE STAINLESS STEEL.
6. ALL WELDING SHALL BE DONE IN ACCORDANCE WITH THE REQUIRMENTS OF THE A.W.S.
7. WIND LOAD AS PER ASCE 7-88 @ 110 MPH EXPOSURE-D. COMPONENTS AND CLADDING OTHER STRUCTURES.

William D. Cook, P.E.
43904
Structural Engineer
1/12/98

FILE NAME: DIXSTD-C

NO	DATE	REVISIONS

ARTHUR L. BROMLEY, P.E. INC.
WILLIAM D. COOK P.E. #43904
CONSULTING STRUCTURAL ENGINEER
2004 N.E. 49TH STREET
FORT LAUDERDALE, FL. 33308
(954)772-4624

STANDARD #11 RAILING CALCULATIONS.
FOR
DIXIE METAL PRODUCTS INC.
1471 NEPTUNE DRIVE.
BOYNTON BEACH, FL. 33426
(561)731-4555

SHEET No. 1 OF 2

DET. WJK	DATE 4.15.97	JOB NO.	DSR11
CHK. WC	DATE 4.15.97		

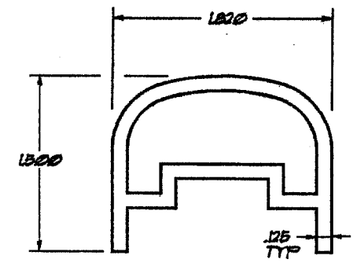

TOP RAIL #11

Ix=.2270 IN^4
Cx=.756 IN
Iy=.1075 IN^4
Cy=.910 IN

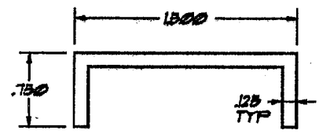

6063-T5

BTM RAIL

Ix=.017335 IN^4
Cx=.511 IN
Iy=.10922 IN^4
C=.750 IN

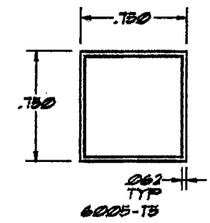

6005-T5

PICKET

I=.013570 IN^4
C=.375 IN

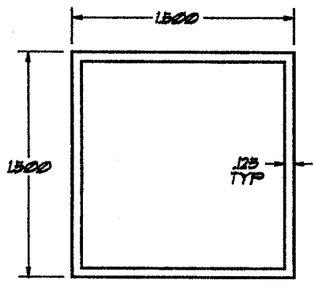

6061-T6

POST

I=.21424 IN^4
C=.750 IN

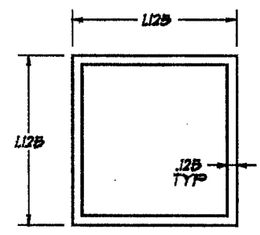

6061-T6

STIFFENER (STAIR)

I=.120 IN^4
C=.5625 IN

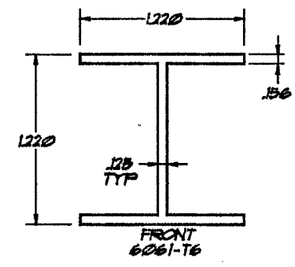

FRONT
6061-T6

STIFFENER (BALCONY)

I=.113493 IN^4
C=.610 IN

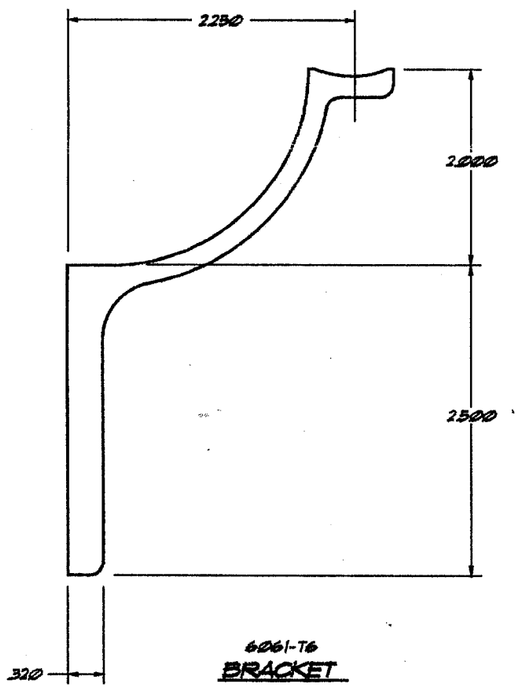

6061-T6

BRACKET

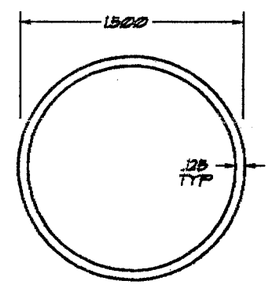

6061-T6

WALL RAIL

I=.3493 IN^4

PRODUCT RENEWED

ACCEPTANCE No. 01-0206.14

EXPIRATION DATE 03/26/2006

By Helmy A. Makar

PRODUCT CONTROL DIVISION
BUILDING CODE COMPLIANCE OFFICE

APPROVED AS COMPLYING WITH THE SOUTH FLORIDA BUILDING CODE
DATE MARCH 26 1998
BY Helmy A. Makar
PRODUCT CONTROL DIVISION
BUILDING CODE COMPLIANCE OFFICE
ACCEPTANCE NO. 97-0529.07

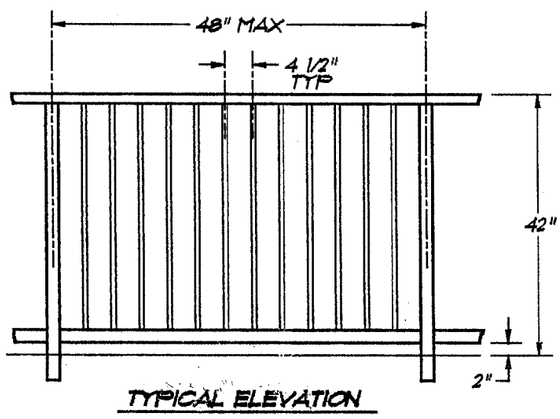

TYPICAL ELEVATION

NO	DATE	REVISIONS

ARTHUR L. BROMLEY, P.E. INC.
WILLIAM D. COOK P.E. #43904
CONSULTING STRUCTURAL ENGINEER
2004 N.E. 49TH STREET
FORT LAUDERDALE, FL. 33308
(954)772-4624

STANDARD #11 RAILING CALCULATIONS.
FOR
DIXIE METAL PRODUCTS INC.
1471 NEPTUNE DRIVE.
BOYNTON BEACH, FL. 33426
(561)731-4555

SHEET No. 2 OF 2

DET. WK	DATE 4.15.97	JOB NO.	DSR11
CHK. WC	DATE 4.15.97		

FILE NAME: DIX8TD-B

William D. Cook, P.E.
 # 43904
Structural Engineer
1/12/98