MIAMI-DADE

BUILDING CODE COMPLIANCE OFFICE (BCCO)
PRODUCT CONTROL DIVISION

MIAMI-DADE COUNTY, FLORIDA
METRO-DADE FLAGLER BUILDING
140 WEST FLAGLER STREET, SUITE 1603
MIAMI, FLORIDA 33130-1563
(305) 375-2901 FAX (305) 375-2908

NOTICE OF ACCEPTANCE (NOA)

Alusuisse Composites, Inc.
P.O. Box 507
208 West 5th Street.
Benton, KY 42025

SCOPE: This NOA is being issued under the applicable rules and regulations governing the use of construction materials. The documentation submitted has been reviewed by Miami-Dade County Product Control Division and accepted by the Board of Rules and Appeals (BORA) to be used in Miami Dade County and other areas where allowed by the Authority Having Jurisdiction (AHJ).

This NOA shall not be valid after the expiration date stated below. The Miami-Dade County Product Control Division (In Miami Dade County) and/or the AHJ (in areas other than Miami Dade County) reserve the right to have this product or material tested for quality assurance purposes. If this product or material fails to perform in the accepted manner, the manufacturer will incur the expense of such testing and the AHJ may immediately revoke, modify, or suspend the use of such product or material within their jurisdiction. BORA reserves the right to revoke this acceptance, if it is determined by Miami-Dade County Product Control Division that this product or material fails to meet the requirements of the applicable building code.
This product is approved as described herein, and has been designed to comply with the High Velocity Hurricane Zone of the Florida Building Code.

DESCRIPTION: Exterior Panel Systems

APPROVAL DOCUMENT: Drawing No. ALUPLUS-1, titled "DADE CO. ALUCOBOND PLUS", sheets 1 through 2, prepared by ALCAN COMPOSITES USA INC, dated 12/20/02 and revised on 04/22/03, signed and sealed by Richard Boyette P.E., bearing the Miami-Dade County Product Control revised stamp with the Notice of Acceptance number and expiration date by the Miami-Dade County Product Control Division.

MISSILE IMPACT RATING: Small Missile Impact

LABELING: Each unit shall bear a permanent label with the manufacturer's name or logo, city, state and following statement: "Miami-Dade County Product Control Approved", unless otherwise noted herein.

RENEWAL of this NOA shall be considered after a renewal application has been filed and there has been no change in the applicable building code negatively affecting the performance of this product.

TERMINATION of this NOA will occur after the expiration date or if there has been a revision or change in the materials, use, and/or manufacture of the product or process. Misuse of this NOA as an endorsement of any product, for sales, advertising or any other purposes shall automatically terminate this NOA. Failure to comply with any section of this NOA shall be cause for termination and removal of NOA.

ADVERTISEMENT: The NOA number preceded by the words Miami-Dade County, Florida, and followed by the expiration date may be displayed in advertising literature. If any portion of the NOA is displayed, then it shall be done in its entirety.

INSPECTION: A copy of this entire NOA shall be provided to the user by the manufacturer or its distributors and shall be available for inspection at the job site at the request of the Building Official.

This NOA **revises NOA # 00-0802.04** and consists of this page 1 as well as approval document mentioned above.
The submitted documentation was reviewed by **Candido F. Font, P.E.**

5/29/03

PRODUCT CONTROL ACCEPTED

Alusuisse Composites, Inc.

NOTICE OF ACCEPTANCE: EVIDENCE SUBMITTED

(For File ONLY. Not part of NOA)

A DRAWINGS

1 Drawings prepared by Alcan Composites, Inc., titled "Dade Co. Alucobond Plus", No.ALUPLUS-1, dated 12/20/02 with last revision on 04/22/03, Sheet 1 and 2 signed and sealed by Richard Boyette, PE.

B TEST

1. - Test report on Small Missile Impact test, Cyclic Wind Pressure test and Uniform Static Air Pressure test and Air Infiltration test per PA 201, 202 & 203 on "Alucobond Plus Composite Aluminum Panels" prepared by Architectural Testing Inc., report No. ATI-02031, dated 01/02/03, signed and sealed by J. A. Reeves, PE.
2. - Self Ignition Temperature test report per ASTM D-1929 on "Alucobond Plus Core Material", prepared by Omega Point Laboratories, Project No. 15632-108671, dated 04/13/01, signed by E. L. Schmidt Jr.
3. - Surface Burning Characteristic test report per ASTM E-84 on "Polyethylene Compound Core Panel" prepared by Southwest Research Institute, Project No. 01-4510-326b, dated 03/30/92 and signed by A. B. Wenzel.
4. - Time of Burning test report per ASTM D-635 on "Alucobond Plus" prepared by Southwest Research Institute, Project No. 01-2303-393, dated 09/23/99, signed by A. B. Wenzel.
5. - Panel Evaluation test report on "Alucobond Plus Polyethylene Blended Compound Core" prepared by Architectural Testing, Report No. 01-35709.04, dated 04/07/03, signed and sealed by J. A. Reeves, PE.

C CALCULATIONS

N/A

D MATERIAL CERTIFICATION

1. Evaluation Report No PFC-4291, prepared by ICBO Evaluation Service, Inc, dated 07/01/00 without signature.

E STATEMENTS

1 Test compliance prepared by Architectural Testing, on 01/15/03, signed and sealed by J. A. Reeves, PE.

Candido F. Font, P.E.
Senior Product Control Examiner
NOA No 01-0221.01
Expiration Date: December 14, 2005
Approval Date: May 29, 2003

DESCRIPTION:

THIS IS 4mm THICK ALUCOBOND PLUS, NON-FIRE RATED COMPOSITE PANELS CONSISTING OF TWO .020" ALUMINUM FACE SHEETS WITH A PE COMPOUND CORE. PANEL EDGES ARE FOLDED OVER AND THE FOLDED CORNERS ARE REINFORCED WITH .035" THICK ALUMINUM CORNER ANGLES ANGLES WHICH ARE ATTACHED WITH #10 X 3/4" SHEET METAL SCREWS. ATTACHMENT SYSTEM BY: JOHN W. MCDOUGALL CO., NASHVILLE, TN.

DESIGN PRESSURE RATING
+153.3 PSF – 153.3 PSF
SMALL MISSLE IMPACT RESISTANCE

MATERIAL CHARACTERISTICS:

	ASTM TEST	ALUCOBOND PLUS PROPERTIES
1. CORE MATERIAL		
SELF-IGNITION TEMP.	D1929	878DF
FLASH IGNITION TEMP.	D1929	842DF
AVG. TIME OF BURNING	D635	<1 SEC.
AVG. EXT. OF BURNING	D635	<1 mm
FLAME SPREAD INDEX (CORE)	E84	15
SMOKE DEV. INDEX (CORE)	E84	45

2. ALUMINUM SKINS ALUCOBOND PLUS

THICKNESS	0.02 INCHES
ALLOY (TYP.)	3000 SERIES-H24
FINISH (TYP.)	PVDF PAINT

3. PANEL SIZES ALUCOBOND PLUS

WIDTH	39.37" (1.00M) TO 62"
LENGTH	2' to 28'
THICKNESS	0.16 INCHES (4.00 mm)

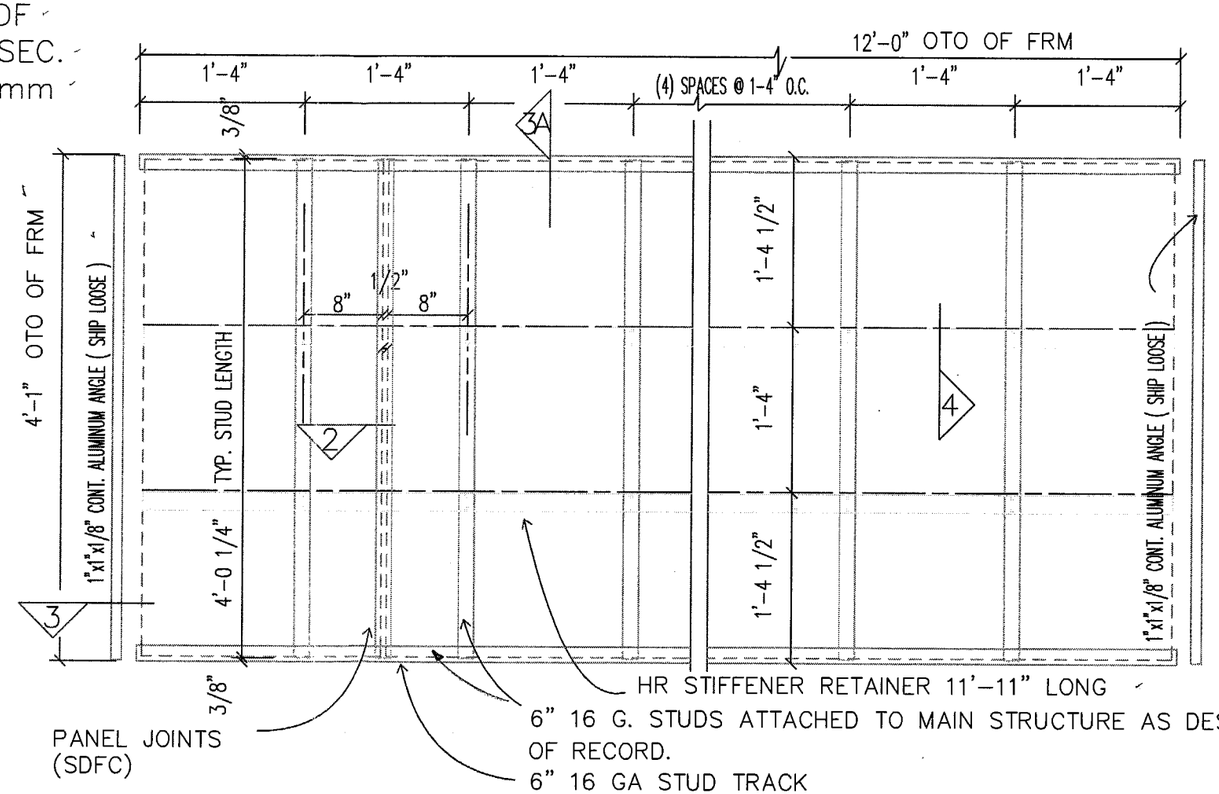

RICHARD BOYETTE
FL Civil PE #42485
4031 Coconut Blvd.
Royal Palm Bch FL 33411
561/968-5765 Voice / Fax
9/29/03

FOR OFFICE USE ONLY

PRODUCT REVISED
as complying with the Florida Building Code
Acceptance No. 01-0221.01
Expiration Date 12/14/05
By
Miami Dade Product Control Division

ALCAN COMPOSITES USA INC.			
208 WEST 5th STREET, BENTON, KY 42025			
TITLE:DADE CO. ALUCOBOND PLUS			
DWG NO.	SHT. NO.	DWG DATE	REV.DATE
ALUPLUS-1	1	12/20/02	4/22/03
RICHARD BOYETTE, PE		PE #42485	
4031 COCONUT BLVD, ROYAL PALM BEACH, FL 33411			

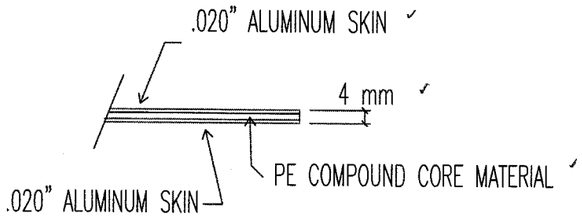

.1 PANEL SECTION

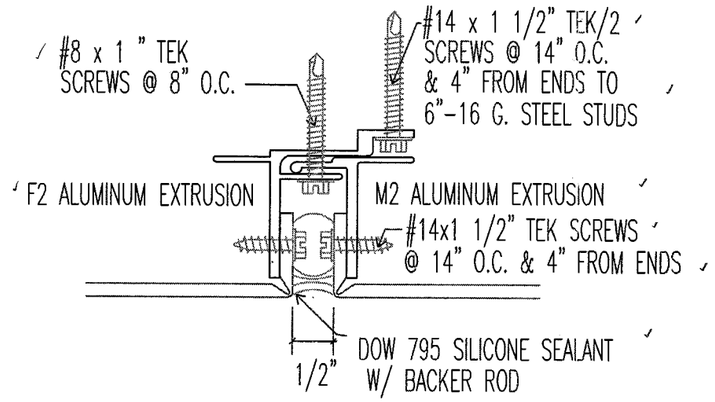

.2 PANEL JOINTS

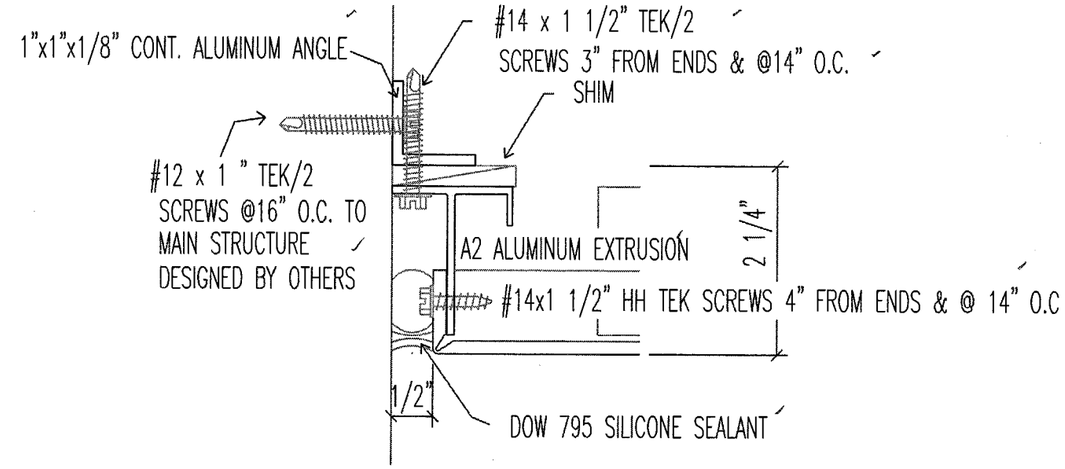

.3 PANEL PERIMETER

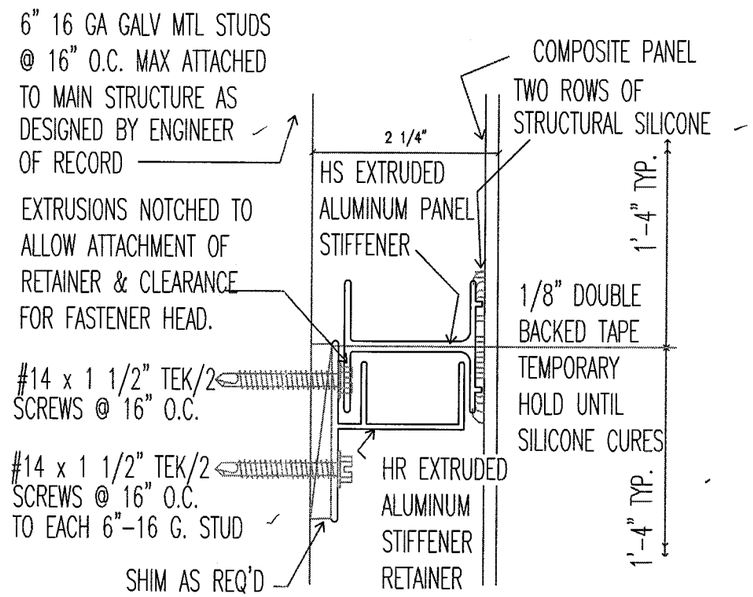

.4 PANEL STIFFENER RETAINER

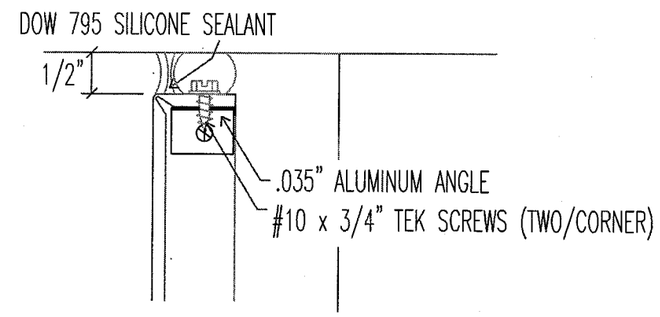

.5 PANEL – INSIDE CORNER

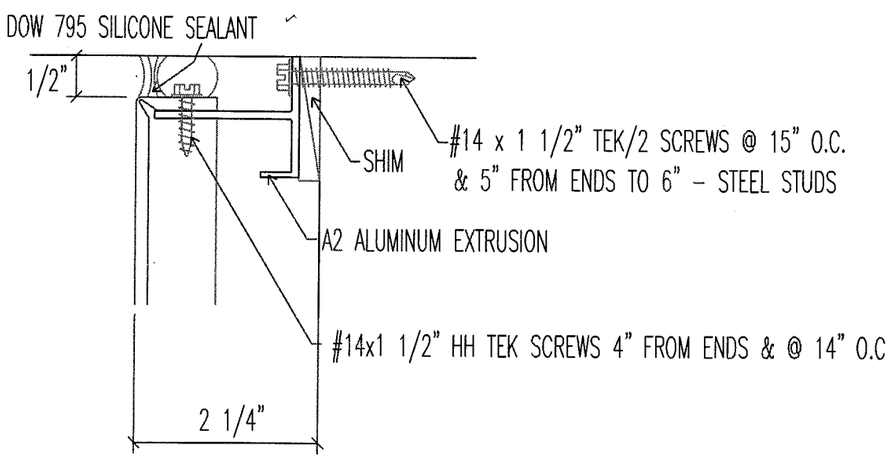

.3A PANEL PERIMETER (TOP & BOTTOM)

RICHARD BOYETTE
FL Civil PE #42485
4031 Coconut Blvd
Royal Palm Bch FL 33411
[illegible]-5766 Voice / Fax

FOR OFFICE USE ONLY

PRODUCT REVISED
as complying with the Florida
Building Code
Acceptance No. 01-0221.01
Expiration Date 12/14/05
By
Miami Dade Product Control
Division

ALCAN COMPOSITES USA INC.			4/22/03
208 WEST 5th STREET, BENTON, KY 42025			
TITLE:DADE CO. ALUCOBOND PLUS			
DWG NO.	SHT. NO.	DWG DATE	REV.DATE
ALUPLUS-1	2	12/20/02	4/22/03
RICHARD BOYETTE, PE		PE #42485	
4031 COCONUT BLVD, ROYAL PALM BEACH, FL 33411			