MIAMI-DADE

MIAMI-DADE COUNTY, FLORIDA
METRO-DADE FLAGLER BUILDING

BUILDING CODE COMPLIANCE OFFICE
METRO-DADE FLAGLER BUILDING
140 WEST FLAGLER STREET, SUITE 1603
MIAMI, FLORIDA 33130-1563
(305) 375-2901 FAX (305) 375-2908

CONTRACTOR LICENSING SECTION
(305) 375-2527 FAX (305) 375-2558

CONTRACTOR ENFORCEMENT DIVISION
(305) 375-2966 FAX (305) 375-2908

PRODUCT CONTROL DIVISION
(305) 375-2902 FAX (305) 372-6339

PRODUCT CONTROL NOTICE OF ACCEPTANCE

Binnings Pan American
3000 N.W. 125 Street
Miami ,FL 33167

Your application for Notice of Acceptance (NOA) of:
Series PA-14 Aluminum Single Hung Window
under Chapter 8 of the Code of Miami-Dade County governing the use of Alternate Materials and Types of Construction, and completely described herein, has been recommended for acceptance by the Miami-Dade County Building Code Compliance Office (BCCO) under the conditions specified herein.

This NOA shall not be valid after the expiration date stated below. BCCO reserves the right to secure this product or material at any time from a jobsite or manufacturer's plant for quality control testing. If this product or material fails to perform in the approved manner, BCCO may revoke, modify, or suspend the use of such product or material immediately. BCCO reserves the right to revoke this approval, if it is determined by BCCO that this product or material fails to meet the requirements of the South Florida Building Code.

The expense of such testing will be incurred by the manufacturer.

ACCEPTANCE NO.: 01-0226.04
EXPIRES: 07/09/2006

Raul Rodriguez
Chief Product Control Division

THIS IS THE COVERSHEET, SEE ADDITIONAL PAGES FOR SPECIFIC AND GENERAL CONDITIONS
BUILDING CODE & PRODUCT REVIEW COMMITTEE

This application for Product Approval has been reviewed by the BCCO and approved by the Building Code and Product Review Committee to be used in Miami-Dade County, Florida under the conditions set forth above.

Francisco J. Quintana, R.A.
Director
Miami-Dade County
Building Code Compliance Office

APPROVED: 07/05/2001

\\s0450001\pc2000\\templates\notice acceptance cover page.dot

Binnings Pan American

ACCEPTANCE No.: 01-0226.04

APPROVED : JUL 0 5 2001

EXPIRES : July 09, 2006

NOTICE OF ACCEPTANCE: SPECIFIC CONDITIONS

1. SCOPE

1.1 This **renews** the Notice of Acceptance No. 97-1027.09, which was issued on July 09, 1998. This approves an aluminum single hung window, as described in Section 2 of this Notice of Acceptance, designed to comply with the South Florida Building Code (SFBC), 1994 Edition for Miami-Dade County, for the locations where the pressure requirements, as determined by SFBC Chapter 23, do not exceed the Design Pressure Rating values indicated in the approved drawings.

2. PRODUCT DESCRIPTION

2.1 The **Series PA-14 Aluminum Single Hung Window** and its components shall be constructed in strict compliance with the following documents: Drawing No **PA-14DC**, Sheets 1 through 8 of 8, dated 10/22/97, revised on 5/31/01, 6/1/01, 6/4/01 and 6/7/01, signed and sealed by Wm. M. Meyers, P.E., bearing the Miami-Dade County Product Control approval stamp with the Notice of Acceptance number and approval date by the Miami-Dade County Product Control Division. These documents shall hereinafter be referred to as the approved drawings.

3. LIMITATIONS

3.1 This approval applies to single unit applications only, as shown in approved drawings.

4. INSTALLATION

4.1 The aluminum single hung window and its components shall be installed in strict compliance with the approved drawings.

4.2 Hurricane protection system (shutters): the installation of this unit **will require** a hurricane protection system.

5. LABELING

5.1 Each unit shall bear a permanent label with the manufacturer's name or logo, city, state and following statement: "Miami-Dade County Product Control Approved".

6. BUILDING PERMIT REQUIREMENTS

6.1 Application for building permit shall be accompanied by copies of the following:

- **6.1.1** This Notice of Acceptance
- **6.1.2** Duplicate copies of the approved drawings, as identified in Section 2 of this Notice of Acceptance, clearly marked to show the components selected for the proposed installation.
- **6.1.3** Any other documents required by the Building Official or the South Florida Building Code (SFBC) in order to properly evaluate the installation of this system.

Manuel Perez, P.E. Product Control Examiner
Product Control Division

Binnings Pan American

ACCEPTANCE No.: 01-0226.04

APPROVED : JUL 0 5 2001

EXPIRES : July 09, 2006

NOTICE OF ACCEPTANCE: STANDARD CONDITIONS

1. Renewal of this Acceptance (approval) shall be considered after a renewal application has been filed and the original submitted documentation, including test supporting data, engineering documents, are no older than eight (8) years.

2. Any and all approved products shall be permanently labeled with the manufacturer's name, city, state, and the following statement: "Miami-Dade County Product Control Approved", or as specifically stated in the specific conditions of this Acceptance.

3. Renewals of Acceptance will not be considered if:
   a) There has been a change in the South Florida Building Code affecting the evaluation of this product and the product is not in compliance with the code changes;
   b) The product is no longer the same product (identical) as the one originally approved;
   c) If the Acceptance holder has not complied with all the requirements of this acceptance, including the correct installation of the product;
   d) The engineer who originally prepared, signed and sealed the required documentation initially submitted is no longer practicing the engineering profession.

4. Any revision or change in the materials, use, and/or manufacture of the product or process shall automatically be cause for termination of this Acceptance, unless prior written approval has been requested (through the filing of a revision application with appropriate fee) and granted by this office.

5. Any of the following shall also be grounds for removal of this Acceptance:
   a) Unsatisfactory performance of this product or process.
   b) Misuse of this Acceptance as an endorsement of any product, for sales, advertising or any other purpose.

6. The Notice of Acceptance number preceded by the words Miami-Dade County, Florida, and followed by the expiration date may be displayed in advertising literature. If any portion of the Notice of Acceptance is displayed, then it shall be done in its entirety.

7. A copy of this Acceptance as well as approved drawings and other documents, where it applies, shall be provided to the user by the manufacturer or its distributors and shall be available for inspection at the job site at all time. The engineer need not reseal the copies.

8. Failure to comply with any section of this Acceptance shall be cause for termination and removal of Acceptance.

9. This Notice of Acceptance consists of pages 1, 2 and this last page 3.

END OF THIS ACCEPTANCE

Manuel Perez

Manuel Perez, P.E. Product Control Examiner
Product Control Division

Binnings Pan American

ACCEPTANCE No.: **01-0226.04**

APPROVED : JUL 0 5 2001

EXPIRES : **July 09, 2006**

NOTICE OF ACCEPTANCE: EVIDENCE SUBMITTED
(For File ONLY. Not part of NOA.)

A. DRAWINGS

1. Manufacturer's die drawings and sections.
2. Drawing No **PA-14DC**, Sheets 1 through 8 of 8, dated 10/22/97, revised on 5/31/01, 6/1/01, 6/4/01 and 6/7/01, signed and sealed by Wm. M. Meyers, P.E.

B. TESTS

1. Test reports on: 1) Air Infiltration Test, per PA 202.
   2) Uniform Static Air Pressure Test, Loading per PA 202.
   3) Water Resistance Test, per PA 202.
   4) Forced Entry Test, per PA 202 and AAMA 1302.5

   along with marked-up drawings and installation diagram of a Series PA 14 aluminum single hung window with 1/4" annealed glass, prepared by American Test Lab of South Florida, Test Report No. **ATL-0514.01-98**, dated 06/0298, signed and sealed by William R. Mehner, P.E.
2. Test reports on: 1) Uniform Static Air Pressure Test, Loading per PA 202-94 along with marked-up drawings and installation diagram of a Series PA 14 aluminum single hung window with 3/16" tempered glass, with and without reinforcement, 1 specimen each, prepared by American Test Lab. Of South Florida, Test Report No. **ATL-0401.01-97R**, dated 4/22/97, signed and sealed by Gilbert Diamond, P.E.
3. Test reports on: 1) Uniform Static Air Pressure Test, Loading per PA 202-94 along with marked-up drawings and installation diagram of a Series PA 14 aluminum single hung window with 1/8" tempered glass, 1/8" annealed glass and single strength annealed glass, prepared by Miami Testing Laboratory, Inc., Test Report No. **MTL-16610**, dated February 7, 1996, signed and sealed by David G. Ober, P.E.
4. Test reports on: 1) Air Infiltration Test, per ASTM E2283.
   2) Uniform Static Air Pressure Test, Loading per ASTM E330.
   3) Water Resistance Test, per ASTM E547/E331.
   4) Forced Entry Test, per AAMA 1302.5

   along with marked-up drawings and installation diagram of a Series PA 14 aluminum single hung window with 3/16" annealed glass, prepared by Miami Testing Laboratory, Inc., Test Report No. **MTL-16029**, dated July 19, 1994, signed and sealed by Ernest E. Mitchell, P.E.

Manuel Perez

Manuel Perez, P.E. Product Control Examiner
Product Control Division

Binnings Pan American

ACCEPTANCE No.: **01-0226.04**

APPROVED : JUL 0 5 2001

EXPIRES : **July 09, 2006**

NOTICE OF ACCEPTANCE: EVIDENCE SUBMITTED
(For File ONLY. Not part of NOA.)

C. CALCULATIONS

1. Anchor Calculations and structural analysis, dated 10/21/97 and 10/22/97, signed and sealed by William M. Meyers, P.E.

D. MATERIAL CERTIFICATIONS

Not Required

E. STATEMENTS

1. Letter issued by R. E. Fisher & Associates, Inc. stating that the product has not changed since it was originally approved, dated 06/15/01, signed and sealed by William M. Meyers, P.E.

F. OTHER

1. Notice of Acceptance No. **97-1027.09**, issued to Binnings Pan American for their PA-14 Aluminum Single Hung Window, approved on 07/09/98 and expiring on 07/09/01.

Manuel Perez, P.E. Product Control Examiner
Product Control Division

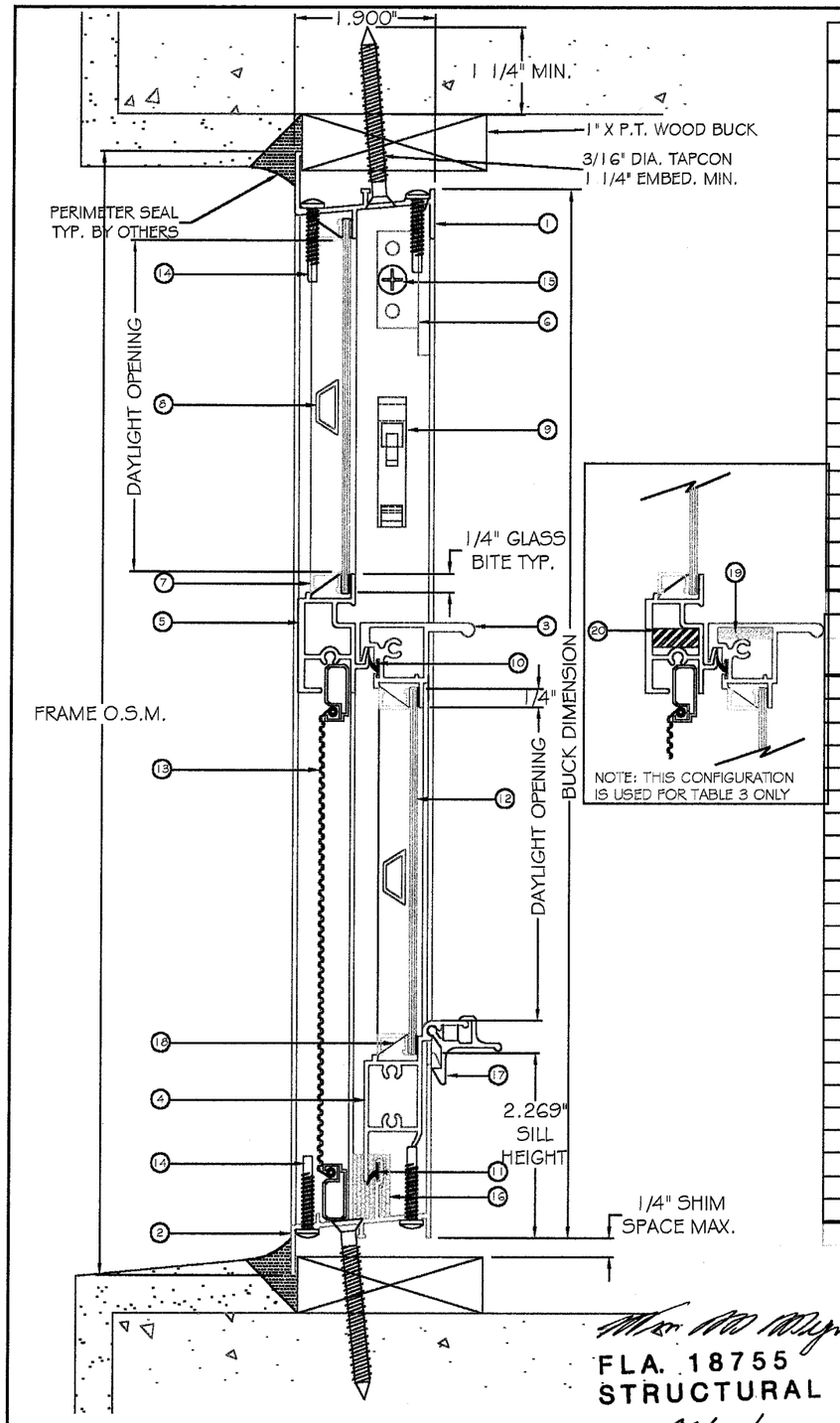

1/1 PA-14 SINGLE HUNG VERTICAL SECTION

VERTICAL SECTION BILL OF MATERIAL

PART NO.	ITEM	QUANTITY	EXTRUSION NUMBER	MACHINING NUMBER	MATERIAL	REMARKS
1	FRAME HEAD	1	14-61	14-61-1	6063 T-5	
2	FRAME SILL	1	14-90	14-90-1	6063 T-5	
3	VENT HEAD	1	14-86	14-86-1	6063 T-5	HI-RISE VENT HEAD
4	VENT SILL	1	14-82	14-82-1	6063 T-5	
5	MEETING RAIL	1	14-71	14-71-1	6063 T-5	
6	VENT STOP	2	14-70	14-70-1	6063 T-5	
7	FALSE GRID FRAME (HORIZ.)	4	14-92	14-92-1	6063 T-5	OPTIONAL (CAN BE SUBSTITUTED W/ ITEM #18)
8	FALSE MUNTIN (HORIZONTAL)	AS REQ'D	14-88	14-88-1	6063 T-5	USED IN CONJUNCTION WITH ITEM #8
9	VENT RELEASE	2			NYLON	
10	MEETING RAIL W.T.S.P.	AS REQ'D		14-2024	NYLON	
11	VENT SILL W.S.T.P.	AS REQ'D		14-2024	NYLON	
12	GLASS	2				SEE APPROPRIATE TABLES FOR THICKNESS AND PSF
13	SCREEN	1		14-3057	FIBERGLASS	
14	FRAME AND VENT SILL SCREW	12		14-8003	STEEL	#8 X 1" PPHSMS PILOT POINT
15	VENT STOP SCREW	2		14-8001	STEEL	#8 X 3/4" PTHSMS "B"
16	FOAM PAD	2		14-2007	POLYUR.	
17	SNAP LATCH	AS REQ'D	14-89	14-89-1	6063 T-5	USE (2) AFTER 37" WIDE
18	ROLL FORM GLAZING BEAD	AS REQ'D			ALUM.	OPTIONAL (CAN BE SUBSTITUTED W/ ITEMS #8 & 9)
19	1/8" X 3/4" STTEL BAR	1			STEEL	IN VENT TOP RAIL (APPLIES TO TABLE 3 ONLY)
20	1/4" X 5/8" STEEL BAR	1			STEEL	IN FRAME MEETING RAIL (APPLIES TO TABLE 3 ONLY)

BUCK	DAYLIGHT OPENING		GLASS HEIGHT		SASH	FRAME
HEIGHT	VENT	FIXED	VENT	FIXED	OPENING	O.S.M.
24	9 1/4	9 7/16	10	10	6 3/4	25
25	9 3/4	9 15/16	10 1/2	10 1/2	7 1/4	26
28	11 1/4	11 7/16	12	12	8 3/4	29
30	12 1/4	12 7/16	13	13	9 3/4	31
36	15 1/4	15 7/16	16	16	12 3/4	37
37 3/8	15 15/16	16 1/4	16 5/8	16 5/8	13 3/8	38 3/8
40	17 1/4	17 7/16	18	18	14 3/4	41
44	19 1/4	19 7/16	20	20	16 3/4	45
48	21 1/4	21 7/16	22	22	18 3/4	49
49 5/8	22 1/16	22 1/4	22 3/4	22 3/4	19 1/2	50 5/8
52	23 1/4	23 7/16	24	24	20 3/4	53
55 1/2	25	25 3/16	25 3/4	25 3/4	22 1/2	56 1/2
57	25 3/4	25 15/16	26 1/2	26 1/2	23 1/4	58
60	27 1/4	27 7/16	28	28	24 3/4	61
62	28 1/4	28 7/16	29	29	25 3/4	63
64	28 1/4	30 21/32	29	31	25 3/4	65
68	28 1/4	34 10/16	29	35	25 3/4	69
72	28 1/4	38 5/8	22 13/16	45 3/16	19 4/7	73
73 3/16	28 1/4	39 27/32	29	40 1/8	25 3/4	74 3/16
76 5/8	28 1/4	43 9/32	29	43 5/8	25 3/4	77 5/8
80	22 1/16	52 27/32	22 3/4	53 1/4	19 1/2	81
84	28 1/4	50 21/32	29	51	25 3/4	85
88	28 1/4	54 21/32	29	55	25 3/4	89
90	28 1/4	56 21/32	29	57	25 3/4	91

APPROVED AS COMPLYING WITH THE
SOUTH FLORIDA BUILDING CODE
DATE JUL 05 2001
BY Manuel Perez
PRODUCT CONTROL DIVISION
BUILDING CODE COMPLIANCE OFFICE
ACCEPTANCE NO. 01-0226.04

ROBT. E. FISHER
WM. M. MEYERS, P.E.
Consulting Engineers
9301 N.E. 6th Ave. C-300
Miami Shores, FL 33138
(305) 758-3117 557-4006 Fax 362-6282

FLA. 18755
STRUCTURAL
Date: 06/07/01

Revisions:
A-REVISED AS PER DADE COUNTY REQUEST
B-REVISED SHEETS 4-8 FOR ASTM E1300

Binnings Pan American PA
3000 N.W. 125th Street
Miami, Florida 33167
(305)681-0045

Draw Class:	Part Class:	Prod Category:	Series/Model:	Item:	Sheet:
ASSEMBLY	—	S.H.	PA-14		1 OF 8

Material: VARIES

Drawn By:	Date:
PJS	10/22/97
Revised By: R.R.	**Date:** 6/7/01

PA-14 SINGLE HUNG VERTICAL ASSEMBLY

Part Number:	Drawing Number:	Revision Level:
	PA-14DC-01B	B

HORIZONTAL SECTION BILL OF MATERIAL

PART NO.	ITEM	QUANTITY	EXTRUSION NUMBER	MACHINING NUMBER	MATERIAL	REMARKS
1	FRAME JAMB	2	14-51	14-51-1	6063 T-5	
2	VENT JAMB	2	14-49	14-49-1	6063 T-5	
4	FALSE MUNTIN (VERT.)	AS REQ'D	14-88	14-88-1	6063 T-5	USED IN CONJUNCTION WITH ITEM #3
5	VENT BOTTOM GUIDE	2	14-5018		NYLON	
6	VENT TOP GUIDE	2	14-5015		NYLON	
7	GLASS	2				
8	VENT JAMB WEATHER STRIP	2	08--2010			
9	VENT HEAD ASSEMBLY SCREW	2	14-8003		STEEL	#8 X 1" PPHSMS PILOT POINT
10	MEETING ASSEMBLY SCREW	2	14-8002		NYLON	#8 X 3/4" PTHSMS "B"
11	ROLL FORM GLAZ'G BEAD	4	MB-059-(065)		ALUM.	OPTIONAL (CAN BE SUBSTITUTED WITH ITEMS #3 & 4)
12	BLOCK & TACKLE BALANCE	2			VARIES	
13	DUST PLUG	2	14-2008		NYLON	

BUCK WIDTH	DAYLIGHT OPENING		GLASS WIDTH		SASH OPENING	FRAME O.S.M.
	VENT	FIXED	VENT	FIXED		
18 1/8	14 5/8	14 5/8	15 1/8	15 1/8	15 11/16	19 1/8
24	20 1/2	20 4/8	21	21	21 9/16	25
25 1/2	22	22	22 1/2	22 1/2	23 1/16	26 1/2
28	24 4/8	24 4/8	25	25	25 9/16	29
30	26 4/8	26 4/8	27	27	27 9/16	31
32	28 1/2	28 4/8	29	29	29 9/16	33
36	32 1/2	32 4/8	33	33	33 9/16	37
40	36 1/2	36 4/8	37	37	37 9/16	41
44	40 1/2	40 4/8	41	41	41 9/16	45
48	44 1/2	44 4/8	45	45	45 9/16	49
50	46 1/2	46 4/8	47	47	47 9/16	51
52 1/8	48 5/8	48 5/8	49 1/8	49 1/8	49 11/16	53 1/8

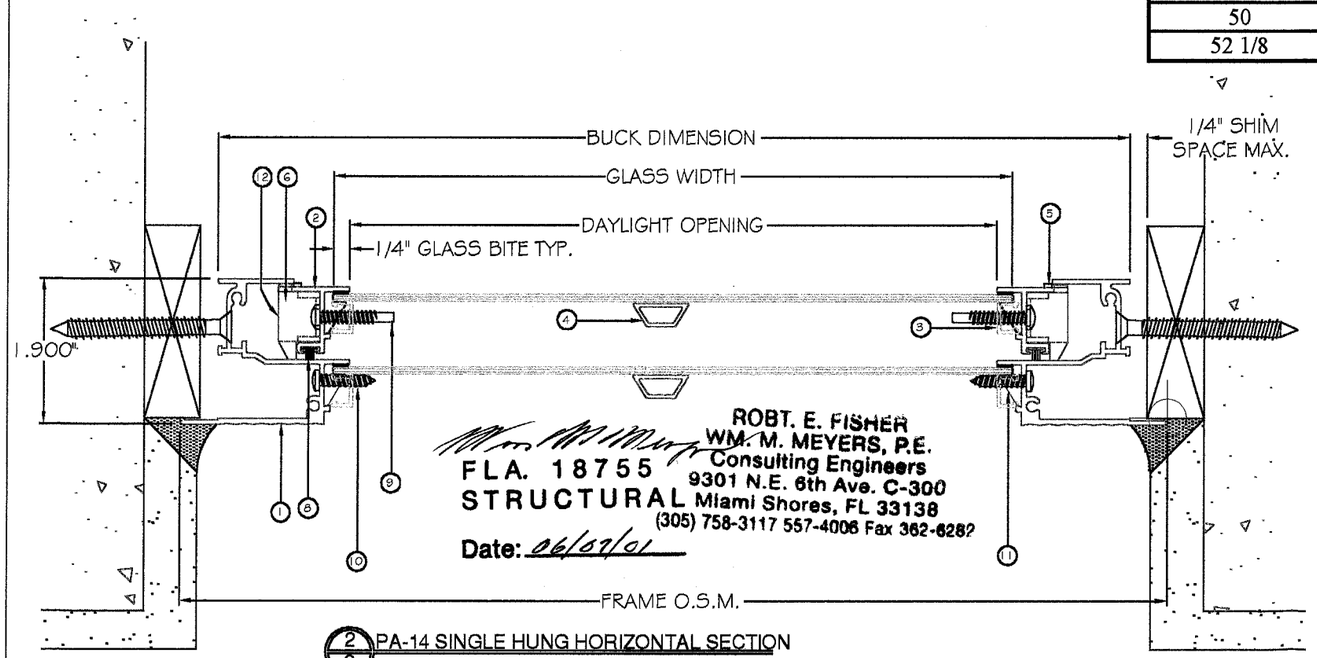

2/2 PA-14 SINGLE HUNG HORIZONTAL SECTION

APPROVED AS COMPLYING WITH THE SOUTH FLORIDA BUILDING CODE
DATE JUL 05 2001
BY Manuel Perez
PRODUCT CONTROL DIVISION
BUILDING CODE COMPLIANCE OFFICE
ACCEPTANCE NO. 01-0226.04

Revisions:
A-REVISED AS PER DADE COUNTY REQUEST
B-REVISED SHEETS 4-8 FOR ASTM E1300

Binnings Pan American PA
3000 N.W. 125th Street
Miami, Florida 33167
(305)681-0045

Draw Class:	Part Class:	Prod. Category:	Series/Model:	Item:	Sheet:
ASSEMBLY	—	S.H.	PA-14		2 OF 8

Material: VARIES

Drawn By: PJS — Date: 10/22/97

Revised By: R.R. — Date: 6/7/01

PA-14 SINGLE HUNG HORIZONTAL ASSEMBLY

Part Number: — Drawing Number: PA-14DC-02B — Revision Level: B

VENT CONSTRUCTION		
Part Name	***Material***	***Construction Details***
Vent Head	6063 T-5 Alum.	Butt Joining
Vent Sill	6064 T-5 Alum.	Butt Joining
Vent Jambs	6065 T-5 Alum.	Butt Joining
Corner	Steel	#10 x 1" phphpp

FRAME CONSTRUCTION		
Part Name	***Material***	***Construction Details***
Head	6063 T-5 Alum.	Butt Joining
Sill	6064 T-5 Alum.	Butt Joining
Jambs	6065 T-5 Alum.	Butt Joining
Corner	Steel	#10 x 1" phphpp

WEATHER - STRIPPING		
Quantity	***Desciption***	***Location***
2	Woolpile	Vent Jamb
1	Flap Vinyl	Sill
1	Flap Vinyl	Meeting Rail
2	Dust Plug	Meeting Rail

HARDWARE		
Quantity	***Desciption***	***Location***
2	Snap Latch	Vent Sill
2	Balances	Vent Jamb
2	Vent Release Clip	Frame Jamb
2	Vent Stop	Frame Jamb

GLAZING METHOD
1. Snap-in Glazing Bead
2. False Muntin Grid System

GLAZING MATERIAL	
Material	***Manufacturer***
Silicone	DOW
Glazing Bead	Binnings Pan-Am
False Muntin Frame	Binnings Pan-Am
Glass	

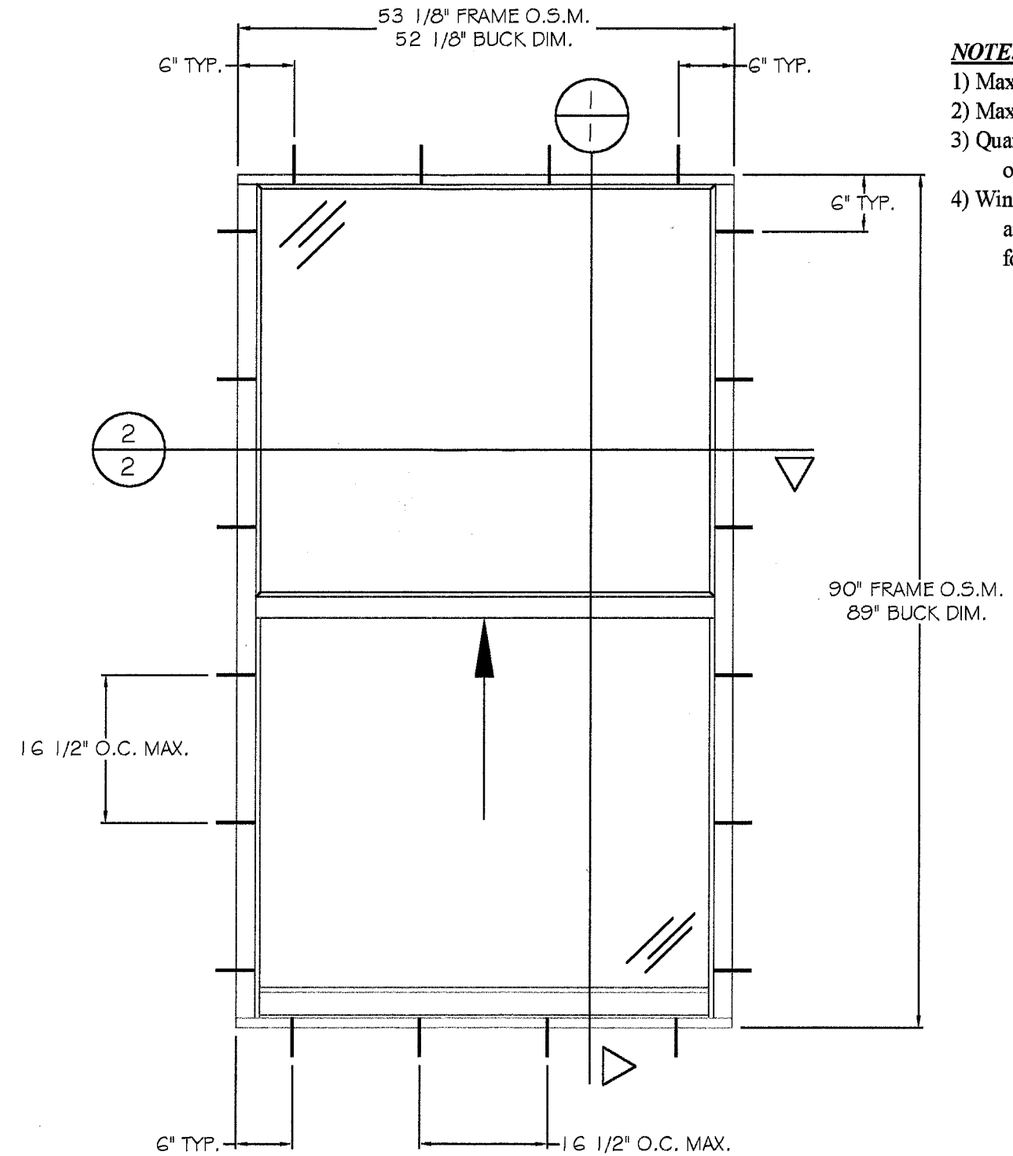

NOTE:

1) Maximum spacing for fasteners from the corners is 6"
2) Maximum spacing for fasteners O.C. is 16 1/2"
3) Quantities at above represent minimum number of fasteners. Additional fasteners is acceptable.
4) Window widths and window heights on charts above are for fastener analysis. Check with manufacturer for availabilty of product.

APPROVED AS COMPLYING WITH THE
SOUTH FLORIDA BUILDING CODE
DATE JUL 05 2001
BY Manuel Perez
PRODUCT CONTROL DIVISION
BUILDING CODE COMPLIANCE OFFICE
ACCEPTANCE NO. 01-0226.04

FLA. 18755
STRUCTURAL
Date: 06/07/01

ROBT. E. FISHER
WM. M. MEYERS, P.E.
Consulting Engineers
9301 N.E. 6th Ave. C-300
Miami Shores, FL 33138
(305) 758-3117 557-4006 Fax 362-6282

Revisions:
A-REVISED AS PER DADE COUNTY REQUEST
B-REVISED SHEETS 4-8 FOR ASTM E1300

Binnings Pan American
3000 N.W. 125th Street
Miami, Florida 33167
(305)681-0045

Draw Class:	Part Class:	Prod Category:	Series/Model:	Item:	Sheet:
ASSEMBLY	—	S.H.	PA-14		3 OF 8

Material:	
VARIES	
Drawn By: PJS	Date: 10/22/97
Revised By: R.R.	Date: 6/7/01

PA-14 SINGLE HUNG CONSTRUCTION

Part Number:	Drawing Number:	Revision Level:
	PA-14DC-03B	B

COMPARATIVE ANALYSIS (POSITIVE LOADS)

Table 1A PA-14 Single Hung Window Positive Design Loads

Based on Comparative Analysis with 3/16" Glass/ ASTM E1300

Non-structural Test Report: ATL#0514.01-98 Structural Test Report MTL #16029

WINDOW WIDTH	WINDOW HEIGHT (INCHES)																					
	24	25	28	30	32	36	37.375	40	44	48	49.625	52	55.5	57	60	62	64	68	72	73.187	76.625	80
18.125	62.00	62.00	62.00	62.00	62.00	62.00	62.00	62.00	62.00	62.00	62.00	62.00	62.00	62.00	62.00	62.00	62.00	62.00	62.00	62.00	62.00	62.00
24.000	62.00	62.00	62.00	62.00	62.00	62.00	62.00	62.00	62.00	62.00	62.00	62.00	62.00	62.00	62.00	62.00	62.00	62.00	62.00	62.00	62.00	62.00
25.500	62.00	62.00	62.00	62.00	62.00	62.00	62.00	62.00	62.00	62.00	62.00	62.00	62.00	62.00	62.00	62.00	62.00	62.00	62.00	62.00	62.00	62.00
28.000	62.00	62.00	62.00	62.00	62.00	62.00	62.00	62.00	62.00	62.00	62.00	62.00	62.00	62.00	62.00	62.00	62.00	62.00	62.00	62.00	62.00	62.00
30.000	62.00	62.00	62.00	62.00	62.00	62.00	62.00	62.00	62.00	62.00	62.00	62.00	62.00	62.00	62.00	62.00	62.00	62.00	62.00	62.00	62.00	62.00
32.000	62.00	62.00	62.00	62.00	62.00	62.00	62.00	62.00	62.00	62.00	62.00	62.00	62.00	62.00	62.00	62.00	62.00	62.00	62.00	62.00	62.00	62.00
36.000	62.00	62.00	62.00	62.00	62.00	62.00	62.00	62.00	62.00	62.00	62.00	62.00	62.00	62.00	62.00	62.00	62.00	62.00	62.00	62.00	61.00	59.00
40.000	62.00	62.00	62.00	62.00	62.00	62.00	62.00	62.00	62.00	62.00	62.00	62.00	62.00	62.00	62.00	62.00	62.00	61.00	59.00	58.00	57.00	55.00
44.000	62.00	62.00	62.00	62.00	62.00	62.00	62.00	62.00	62.00	62.00	62.00	62.00	62.00	62.00	60.00	60.00	58.00	56.00	54.00	53.00	52.00	51.00
48.000	62.00	62.00	62.00	62.00	62.00	62.00	62.00	62.00	62.00	62.00	62.00	61.00	58.00	57.00	56.00	54.00	52.00	51.00	50.00	49.00	48.00	47.00
50.000	62.00	62.00	62.00	62.00	62.00	62.00	62.00	62.00	62.00	62.00	62.00	58.00	55.00	54.00	52.00	51.00	51.00	49.00	47.00	47.00	46.00	45.00
52.125	62.00	62.00	62.00	62.00	62.00	62.00	62.00	62.00	62.00	62.00	62.00	56.00	52.00	51.00	50.00	49.00	48.00	46.00	45.00	45.00	44.00	43.00
54.625	62.00	62.00	62.00	62.00	62.00	62.00	62.00	62.00	62.00	62.00	62.00	54.00	50.00	49.00	47.00	46.00	45.00	44.00	42.00	42.00	41.00	41.00

APPROVED AS COMPLYING WITH THE
SOUTH FLORIDA BUILDING CODE
DATE JUL 0 5 2001
BY Manuel Sierra
PRODUCT CONTROL DIVISION
BUILDING CODE COMPLIANCE OFFICE
ACCEPTANCE NO. 01-0226.04

COMPARATIVE ANALYSIS (NEGATIVE LOADS)

Table 1B PA-14 Single Hung Window Negative Design Loads

Based on Comparative Analysis with 3/16" Glass/ ASTM E1300

Non-structural Test Report: ATL#0514.01-98 Structural Test Report MTL #16029

WINDOW WIDTH	WINDOW HEIGHT (INCHES)																					
	24	25	28	30	32	36	37.375	40	44	48	49.625	52	55.5	57	60	62	64	68	72	73.187	76.625	80
18.125	-62.00	-62.00	-62.00	-62.00	-62.00	-62.00	-62.00	-62.00	-62.00	-62.00	-62.00	-62.00	-62.00	-62.00	-62.00	-62.00	-62.00	-62.00	-62.00	-62.00	-62.00	-62.00
24.000	-62.00	-62.00	-62.00	-62.00	-62.00	-62.00	-62.00	-62.00	-62.00	-62.00	-62.00	-62.00	-62.00	-62.00	-62.00	-62.00	-62.00	-62.00	-62.00	-62.00	-62.00	-62.00
25.500	-62.00	-62.00	-62.00	-62.00	-62.00	-62.00	-62.00	-62.00	-62.00	-62.00	-62.00	-62.00	-62.00	-62.00	-62.00	-62.00	-62.00	-62.00	-62.00	-62.00	-62.00	-62.00
28.000	-62.00	-62.00	-62.00	-62.00	-62.00	-62.00	-62.00	-62.00	-62.00	-62.00	-62.00	-62.00	-62.00	-62.00	-62.00	-62.00	-62.00	-62.00	-62.00	-62.00	-62.00	-62.00
30.000	-62.00	-62.00	-62.00	-62.00	-62.00	-62.00	-62.00	-62.00	-62.00	-62.00	-62.00	-62.00	-62.00	-62.00	-62.00	-62.00	-62.00	-62.00	-62.00	-62.00	-62.00	-62.00
32.000	-62.00	-62.00	-62.00	-62.00	-62.00	-62.00	-62.00	-62.00	-62.00	-62.00	-62.00	-62.00	-62.00	-62.00	-62.00	-62.00	-62.00	-62.00	-62.00	-62.00	-62.00	-62.00
36.000	-62.00	-62.00	-62.00	-62.00	-62.00	-62.00	-62.00	-62.00	-62.00	-62.00	-62.00	-62.00	-62.00	-62.00	-62.00	-62.00	-62.00	-62.00	-62.00	-62.00	-61.00	-59.00
40.000	-62.00	-62.00	-62.00	-62.00	-62.00	-62.00	-62.00	-62.00	-62.00	-62.00	-62.00	-62.00	-62.00	-62.00	-62.00	-62.00	-62.00	-61.00	-59.00	58.00	-57.00	-55.00
44.000	-62.00	-62.00	-62.00	-62.00	-62.00	-62.00	-62.00	-62.00	-62.00	-62.00	-62.00	-62.00	-62.00	-62.00	-60.00	-60.00	-58.00	-56.00	-54.00	53.00	-52.00	-51.00
48.000	-62.00	-62.00	-62.00	-62.00	-62.00	-62.00	-62.00	-62.00	-62.00	-62.00	-62.00	-61.00	-58.00	-57.00	-56.00	-54.00	-52.00	-51.00	-50.00	49.00	-48.00	-47.00
50.000	-62.00	-62.00	-62.00	-62.00	-62.00	-62.00	-62.00	-62.00	-62.00	-62.00	-62.00	-58.00	-55.00	-54.00	-52.00	-51.00	-51.00	-49.00	-47.00	47.00	-46.00	-45.00
52.125	-62.00	-62.00	-62.00	-62.00	-62.00	-62.00	-62.00	-62.00	-62.00	-62.00	-62.00	-56.00	-52.00	-51.00	-50.00	-49.00	-48.00	-46.00	-45.00	45.00	-44.00	-43.00
54.625	-62.00	-62.00	-62.00	-62.00	-62.00	-62.00	-62.00	-62.00	-62.00	-62.00	-62.00	-54.00	-50.00	-49.00	-47.00	-46.00	-45.00	-44.00	-42.00	42.00	-41.00	-41.00

ROBT. E. FISHER
WM. M. MEYERS, P.E
Consulting Engineers
9301 N.E. 6th Ave. C-300
Miami Shores, FL 33138
(305) 758-3117 557-4006 Fax 362-6282

FLA. 18755
STRUCTURAL
Date: 06/07/01

TABLE No.	GLASS TYPE	REINFORCEMENT	SEE DRAWING #'s
1	3/16" ANNEALED	NONE	PA-14DC-04
2	3/16" TEMPERED	NONE	PA-14DC-05
3	3/16" TEMPERED	STEEL	PA-14DC-06
4	DSB 1/8" TEMPERED	NONE	PA-14DC-07
5	DSB 1/8" ANNEALED	NONE	PA-14DC-08
6	SSB 3/32" ANNEALED	NONE	PA-14DC-08

NOTE
Window widths and window heights on charts are for comparative analysis.
Check with manufacturer for availability of product.

Revision Notes:
A- REVISED AS PER DADE COUNTY REQUEST
B- Design pressure changed according to ASTM E1300

Perimeter: -----	Area: -----	Wgt/Ft: -----	BINNINGS IAN AMERICAN ARCHITECTURAL PRODUCTS CORP. COMPANY	3000 N.W. 125th Street Miami, Florida 33167 (305)681-0045		
Material: -----	Surface Area: -----	Ext. Class: -----	Draw Class: CHART	Part Class: ----	Prod Category: 5H	Series/Model: PA-14	Item: COMP. ANAL.	Sheet: 4 of 8
Factor: -----	CCD: -----	Scale: -----	PA-14 SINGLE HUNG COMPARATIVE ANALYSIS			
Drawn By: PJS		Date Drawn: 10/22/97				
Revised By: RR		Date Revised: 6/1/01	Part Number: ---	Drawing Number: PA-14DC-04B		Revision Level: B

COMPARATIVE ANALYSIS (POSITIVE LOADS)

Table 2A PA-14 Single Hung Window Positive Design Loads

Based on Comparative Analysis with 3/16" Tempered Glass/ ASTM E1300

Non-structural Test Report: ATL#0514.01-98 Structural Test Report ATL 0401.02-97R

WINDOW WIDTH	WINDOW HEIGHT (INCHES)																			
	24	25	28	30	32	36	37.375	40	44	48	49.625	52	55.5	57	60	62	64	68	72	73.187
18.125	69.33	69.33	69.33	69.33	69.33	69.33	69.33	69.33	69.33	69.33	69.33	69.33	69.33	69.33	69.33	69.33	69.33	69.33	69.33	69.33
24.000	69.33	69.33	69.33	69.33	69.33	69.33	69.33	69.33	69.33	69.33	69.33	69.33	69.33	69.33	69.33	69.33	69.33	69.33	69.33	69.33
25.500	69.33	69.33	69.33	69.33	69.33	69.33	69.33	69.33	69.33	69.33	69.33	69.33	69.33	69.33	69.33	69.33	69.33	69.33	69.33	69.33
28.000	69.33	69.33	69.33	69.33	69.33	69.33	69.33	69.33	69.33	69.33	69.33	69.33	69.33	69.33	69.33	69.33	69.33	69.33	69.33	69.33
30.000	69.33	69.33	69.33	69.33	69.33	69.33	69.33	69.33	69.33	69.33	69.33	69.33	69.33	69.33	69.33	69.33	69.33	69.33	69.33	69.33
32.000	69.33	69.33	69.33	69.33	69.33	69.33	69.33	69.33	69.33	69.33	69.33	69.33	69.33	69.33	69.33	69.33	69.33	69.33	69.33	69.33
36.000	69.33	69.33	69.33	69.33	69.33	69.33	69.33	69.33	69.33	69.33	69.33	69.33	69.33	69.33	69.33	69.33	69.33	69.33	69.33	69.33
40.000	69.33	69.33	69.33	69.33	69.33	69.33	69.33	69.33	69.33	69.33	69.33	69.33	69.33	69.33	69.33	69.33	69.33	69.33	69.33	69.33
44.000	69.33	69.33	69.33	69.33	69.33	69.33	69.33	69.33	69.33	69.33	69.33	69.33	69.33	69.33	69.33	69.33	69.33	69.33	69.33	69.33
48.000	69.33	69.33	69.33	69.33	69.33	69.33	69.33	69.33	69.33	69.33	69.33	69.33	69.33	69.33	69.33	69.33	69.33	69.33	68.04	67.37
50.000	69.33	69.33	69.33	69.33	69.33	69.33	69.33	69.33	69.33	69.33	69.33	69.33	69.33	69.33	69.33	69.33	68.27	66.20	64.25	63.63
52.125	69.33	69.33	69.33	69.33	69.33	69.33	69.33	69.33	69.33	69.33	69.33	69.33	67.84	66.82	65.04	64.01	63.10	61.55	60.32	60.00

COMPARATIVE ANALYSIS (NEGATIVE LOADS)

Table 2B PA-14 Single Hung Window Negative Design Loads

Based on Comparative Analysis with 3/16" Tempered Glass/ ASTM E1300

Non-structural Test Report: ATL#0514.01-98 Structural Test Report ATL 0401.02-97R

WINDOW WIDTH	WINDOW HEIGHT (INCHES)																			
	24	25	28	30	32	36	37.375	40	44	48	49.625	52	55.5	57	60	62	64	68	72	73.187
18.125	-120.00	-120.00	-120.00	-120.00	-120.00	-120.00	-120.00	-120.00	-120.00	-120.00	-120.00	-120.00	-120.00	-120.00	-120.00	-120.00	-120.00	-120.00	-120.00	-120.00
24.000	-120.00	-120.00	-120.00	-120.00	-120.00	-120.00	-120.00	-120.00	-120.00	-120.00	-120.00	-120.00	-120.00	-120.00	-120.00	-120.00	-120.00	-120.00	-120.00	-120.00
25.500	-120.00	-120.00	-120.00	-120.00	-120.00	-120.00	-120.00	-120.00	-120.00	-120.00	-120.00	-120.00	-120.00	-120.00	-120.00	-120.00	-120.00	-120.00	-120.00	-120.00
28.000	-120.00	-120.00	-120.00	-120.00	-120.00	-120.00	-120.00	-120.00	-120.00	-120.00	-120.00	-120.00	-120.00	-120.00	-120.00	-120.00	-120.00	-120.00	-120.00	-120.00
30.000	-120.00	-120.00	-120.00	-120.00	-120.00	-120.00	-120.00	-120.00	-120.00	-120.00	-120.00	-120.00	-120.00	-120.00	-120.00	-120.00	-120.00	-120.00	-120.00	-120.00
32.000	-120.00	-120.00	-120.00	-120.00	-120.00	-120.00	-120.00	-120.00	-120.00	-120.00	-120.00	-120.00	-120.00	-120.00	-120.00	-120.00	-120.00	-120.00	-120.00	-120.00
36.000	-120.00	-120.00	-120.00	-120.00	-120.00	-120.00	-120.00	-120.00	-120.00	-120.00	-120.00	-120.00	-120.00	-120.00	-120.00	-120.00	-117.94	-113.40	109.20	-108.01
40.000	-120.00	-120.00	-120.00	-120.00	-120.00	-120.00	-120.00	-120.00	-120.00	-119.74	-117.52	-114.62	-110.99	-109.43	-106.14	-104.06	-102.06	-98.28	-94.77	-93.78
44.000	-120.00	-120.00	-120.00	-120.00	-120.00	-120.00	-118.58	-114.87	-109.65	-104.77	-102.64	-99.83	-96.25	-94.90	-92.49	-91.03	-89.35	-86.16	-83.18	-82.34
48.000	-120.00	-120.00	-116.39	-113.40	-110.57	-105.30	-103.60	-100.51	-96.14	-92.14	-90.60	-88.42	-84.97	-83.65	-81.28	-79.86	-78.58	-76.25	-73.71	-72.99
50.000	-114.75	-113.22	-108.86	-106.14	-103.55	-98.74	-97.18	-94.35	-90.33	-86.65	-85.23	-83.25	-80.26	-78.97	-76.63	-75.23	-73.96	-71.71	-69.60	-68.93
52.125	-107.00	-105.61	-101.66	-99.18	-96.82	-92.43	-91.01	-88.42	-84.74	-81.10	-79.11	-76.56	-73.50	-72.39	-70.46	-69.35	-68.36	-66.68	-65.34	-65.00

APPROVED AS COMPLYING WITH THE SOUTH FLORIDA BUILDING CODE
DATE JUL 0 5 2001
BY Manuel Arez
PRODUCT CONTROL DIVISION
BUILDING CODE COMPLIANCE OFFICE
ACCEPTANCE NO. 01-0226.04

ROBT. E. FISHER
WM. M. MEYERS, P.E.
Consulting Engineers
9301 N.E. 6th Ave. C-300
Miami Shores, FL 33138
(305) 758-3117 557-4006 Fax 362-6282

FLA. 18755
STRUCTURAL

Date: 08/07/01

TABLE No.	GLASS TYPE	REINFORCEMENT	SEE DRAWING #'s
1	3/16" ANNEALED	NONE	PA-14DC-04
2	3/16" TEMPERED	NONE	PA-14DC-05
3	3/16" TEMPERED	STEEL	PA-14DC-06
4	DSB 1/8" TEMPERED	NONE	PA-14DC-07
5	DSB 1/8" ANNEALED	NONE	PA-14DC-08
6	SSB 3/32" ANNEALED	NONE	PA-14DC-08

NOTE
Window widths and window heights on charts are for comparative analysis.
Check with manufacturer for availability of product.

Revision Notes:
A- REVISED AS PER DADE COUNTY REQUEST
B- Design pressure changed according to ASTM E1300

Perimeter: -----	Area: -----	Wgt/Ft: -----
Material: -----	Surface Area: -----	Ext. Class: -----
Factor: -----	CCD: -----	Scale: -----
Drawn By: PJS		Date Drawn: 10/22/97
Revised By: RR		Date Revised: 6/1/01

BINNINGS TAN AMERICAN
ARCHITECTURAL PRODUCTS CORP. COMPANY

3000 N.W. 125th Street
Miami, Florida 33167
(305)681-0045

Draw Class:	Part Class:	Prod Category:	Series/Model:	Item:	Sheet:
CHART	---	SH	PA-14	COMP. ANAL.	5 of 8

PA-14 SINGLE HUNG COMPARATIVE ANALYSIS

Part Number:	Drawing Number:	Revision Level:
---	PA-14DC-05B	B

COMPARATIVE ANALYSIS (POSITIVE LOADS)

Table 3A PA-14 Single Hung Window Positive Design Loads

Based on Comparative Analysis with 3/16" Tempered Glass/ ASTM E1300 & Meeting Rail Reinforcement

Non-structural Test Report: ATL#0514.01-98 Structural Test Report ATL 0401.02-97R

WINDOW WIDTH	WINDOW HEIGHT (INCHES)																			
	24	25	28	30	32	36	37.375	40	44	48	49.625	52	55.5	57	60	62	64	68	72	73.187
18.125	69.33	69.33	69.33	69.33	69.33	69.33	69.33	69.33	69.33	69.33	69.33	69.33	69.33	69.33	69.33	69.33	69.33	69.33	69.33	69.33
24.000	69.33	69.33	69.33	69.33	69.33	69.33	69.33	69.33	69.33	69.33	69.33	69.33	69.33	69.33	69.33	69.33	69.33	69.33	69.33	69.33
25.500	69.33	69.33	69.33	69.33	69.33	69.33	69.33	69.33	69.33	69.33	69.33	69.33	69.33	69.33	69.33	69.33	69.33	69.33	69.33	69.33
28.000	69.33	69.33	69.33	69.33	69.33	69.33	69.33	69.33	69.33	69.33	69.33	69.33	69.33	69.33	69.33	69.33	69.33	69.33	69.33	69.33
30.000	69.33	69.33	69.33	69.33	69.33	69.33	69.33	69.33	69.33	69.33	69.33	69.33	69.33	69.33	69.33	69.33	69.33	69.33	69.33	69.33
32.000	69.33	69.33	69.33	69.33	69.33	69.33	69.33	69.33	69.33	69.33	69.33	69.33	69.33	69.33	69.33	69.33	69.33	69.33	69.33	69.33
36.000	69.33	69.33	69.33	69.33	69.33	69.33	69.33	69.33	69.33	69.33	69.33	69.33	69.33	69.33	69.33	69.33	69.33	69.33	69.33	69.33
40.000	69.33	69.33	69.33	69.33	69.33	69.33	69.33	69.33	69.33	69.33	69.33	69.33	69.33	69.33	69.33	69.33	69.33	69.33	69.33	69.33
44.000	69.33	69.33	69.33	69.33	69.33	69.33	69.33	69.33	69.33	69.33	69.33	69.33	69.33	69.33	69.33	69.33	69.33	69.33	69.33	69.33
48.000	69.33	69.33	69.33	69.33	69.33	69.33	69.33	69.33	69.33	69.33	69.33	69.33	69.33	69.33	69.33	69.33	69.33	69.33	68.04	67.37
50.000	69.33	69.33	69.33	69.33	69.33	69.33	69.33	69.33	69.33	69.33	69.33	69.33	69.33	69.33	69.33	69.33	68.27	66.20	64.25	63.63
52.125	69.33	69.33	69.33	69.33	69.33	69.33	69.33	69.33	69.33	69.33	69.33	69.33	67.84	66.82	65.04	64.01	63.10	61.55	60.32	60.00

COMPARATIVE ANALYSIS (NEGATIVE LOADS)

Table 3B PA-14 Single Hung Window Positive Design Loads

Based on Comparative Analysis with 3/16" Tempered Glass/ ASTM E1300 & Meeting Rail Reinforcement

Non-structural Test Report: ATL#0514.01-98 Structural Test Report ATL 0401.02-97R

WINDOW WIDTH	WINDOW HEIGHT (INCHES)																			
	24	25	28	30	32	36	37.375	40	44	48	49.625	52	55.5	57	60	62	64	68	72	73.187
18.125	-120.00	-120.00	-120.00	-120.00	-120.00	-120.00	-120.00	-120.00	-120.00	-120.00	-120.00	-120.00	-120.00	-120.00	-120.00	-120.00	-120.00	-120.00	-120.00	-120.00
24.000	-120.00	-120.00	-120.00	-120.00	-120.00	-120.00	-120.00	-120.00	-120.00	-120.00	-120.00	-120.00	-120.00	-120.00	-120.00	-120.00	-120.00	-120.00	-120.00	-120.00
25.500	-120.00	-120.00	-120.00	-120.00	-120.00	-120.00	-120.00	-120.00	-120.00	-120.00	-120.00	-120.00	-120.00	-120.00	-120.00	-120.00	-120.00	-120.00	-120.00	-120.00
28.000	-120.00	-120.00	-120.00	-120.00	-120.00	-120.00	-120.00	-120.00	-120.00	-120.00	-120.00	-120.00	-120.00	-120.00	-120.00	-120.00	-120.00	-120.00	-120.00	-120.00
30.000	-120.00	-120.00	-120.00	-120.00	-120.00	-120.00	-120.00	-120.00	-120.00	-120.00	-120.00	-120.00	-120.00	-120.00	-120.00	-120.00	-120.00	-120.00	-120.00	-120.00
32.000	-120.00	-120.00	-120.00	-120.00	-120.00	-120.00	-120.00	-120.00	-120.00	-120.00	-120.00	-120.00	-120.00	-120.00	-120.00	-120.00	-120.00	-120.00	-120.00	-120.00
36.000	-120.00	-120.00	-120.00	-120.00	-120.00	-120.00	-120.00	-120.00	-120.00	-120.00	-120.00	-120.00	-120.00	-120.00	-120.00	-120.00	-120.00	-120.00	-120.00	-120.00
40.000	-120.00	-120.00	-120.00	-120.00	-120.00	-120.00	-120.00	-120.00	-120.00	-120.00	-120.00	-120.00	-120.00	-120.00	-120.00	-120.00	-120.00	-120.00	-116.64	-115.42
44.000	-120.00	-120.00	-120.00	-120.00	-120.00	-120.00	-120.00	-120.00	-120.00	-120.00	-120.00	-120.00	-118.46	-116.80	-113.83	-112.04	-109.96	-106.04	-102.38	-101.34
48.000	-120.00	-120.00	-120.00	-120.00	-120.00	-120.00	-120.00	-120.00	-118.33	-113.40	-111.51	-108.83	-104.58	-102.96	-100.03	-98.29	-96.71	-93.85	-90.72	-89.83
50.000	-120.00	-120.00	-120.00	-120.00	-120.00	-120.00	-119.61	-116.12	-111.18	-106.64	-104.90	-102.46	-98.79	-97.20	-94.32	-92.60	-91.02	-88.26	-85.66	-84.84
52.125	-120.00	-120.00	-120.00	-120.00	-119.17	-113.76	-112.01	-108.82	-104.29	-99.82	-97.36	-94.22	-90.46	-89.09	-86.72	-85.35	-84.13	-82.07	-80.42	-80.00

APPROVED AS COMPLYING WITH THE SOUTH FLORIDA BUILDING CODE
DATE JUL 05 2001
BY Maurice Perez
PRODUCT CONTROL DIVISION
BUILDING CODE COMPLIANCE OFFICE
ACCEPTANCE NO. 01-0226.04

ROBT. E. FISHER
WM. M. MEYERS, P.E.
Consulting Engineers
9301 N.E. 6th Ave. C-300
Miami Shores, FL 33138
(305) 758-3117 557-4006 Fax 362-6282

FLA. 18755
STRUCTURAL

Date: 06/07/01

TABLE No.	GLASS TYPE	REINFORCEMENT	SEE DRAWING #'s
1	3/16" ANNEALED	NONE	PA-14DC-04
2	3/16" TEMPERED	NONE	PA-14DC-05
3	3/16" TEMPERED	STEEL	PA-14DC-06
4	DSB 1/8" TEMPERED	NONE	PA-14DC-07
5	DSB 1/8" ANNEALED	NONE	PA-14DC-08
6	SSB 3/32" ANNEALED	NONE	PA-14DC-08

NOTE
Window widths and window heights on charts are for comparative analysis.
Check with manufacturer for availability of product.

Revision Notes:
A- REVISED AS PER DADE COUNTY REQUEST
B- Design pressure changed according to ASTM E1300

BINNINGS FAN AMERICAN
ARCHITECTURAL PRODUCTS CORP. COMPANY

3000 N.W. 125th Street
Miami, Florida 33167
(305)681-0045

Perimeter:	Area:	Wgt/Ft:	Draw Class:	Part Class:	Prod Category:	Series/Model:	Item:	Sheet:
-----	-----	-----	CHART	----	5H	PA-14	COMP. ANAL.	6 of 8
Material: -----	**Surface Area:** -----	**Est. Class:** -----						
Factor: -----	**CCD:** -----	**Scale:** -----						
Drawn By: PJS		**Date Drawn:** 10/22/97	PA-14 SINGLE HUNG COMPARATIVE ANALYSIS					
Revised By: RR		**Date Revised:** 6/4/01	**Part Number:** ---		**Drawing Number:** PA-14DC-06B		**Revision Level:** B	

COMPARATIVE ANALYSIS (POSITIVE LOADS)

Table 4A PA-14 Single Hung Window Positive Design Loads

Based on Comparative Analysis with DSB 1/8" Tempered Glass/ ASTM E1300

Non-structural Test Report: ATL#0514.01-98 Structural Test Report MTL # 16610 UNIT A

WINDOW WIDTH	WINDOW HEIGHT (INCHES)																			
	24	25	28	30	32	36	37.375	40	44	48	49.625	52	55.5	57	60	62	64	68	72	73.187
18.125	69.33	69.33	69.33	69.33	69.33	69.33	69.33	69.33	69.33	69.33	69.33	69.33	69.33	69.33	69.33	69.33	69.33	69.33	69.33	69.33
24.000	69.33	69.33	69.33	69.33	69.33	69.33	69.33	69.33	69.33	69.33	69.33	69.33	69.33	69.33	69.33	69.33	69.33	69.33	69.33	69.33
25.500	69.33	69.33	69.33	69.33	69.33	69.33	69.33	69.33	69.33	69.33	69.33	69.33	69.33	69.33	69.33	69.33	69.33	69.33	69.33	69.33
28.000	69.33	69.33	69.33	69.33	69.33	69.33	69.33	69.33	69.33	69.33	69.33	69.33	69.33	69.33	69.33	69.33	69.33	69.33	69.33	69.33
30.000	69.33	69.33	69.33	69.33	69.33	69.33	69.33	69.33	69.33	69.33	69.33	69.33	69.33	69.33	69.33	69.33	69.33	69.33	69.33	69.33
32.000	69.33	69.33	69.33	69.33	69.33	69.33	69.33	69.33	69.33	69.33	69.33	69.33	69.33	69.33	69.33	69.33	69.33	69.33	69.33	69.33
36.000	69.33	69.33	69.33	69.33	69.33	69.33	69.33	69.33	69.33	69.33	69.33	69.33	69.33	69.33	69.33	69.33	69.33	69.33	69.33	69.33
40.000	69.33	69.33	69.33	69.33	69.33	69.33	69.33	69.33	69.33	69.33	69.33	69.33	69.33	69.33	69.33	69.33	69.33	69.33	69.33	69.33
44.000	69.33	69.33	69.33	69.33	69.33	69.33	69.33	69.33	69.33	69.33	69.33	69.33	69.33	69.33	69.33	69.33	69.33	69.33	69.33	69.33
48.000	69.33	69.33	69.33	69.33	69.33	69.33	69.33	69.33	69.33	69.33	69.33	69.33	69.33	69.33	69.33	69.33	69.33	69.33	68.04	67.37
50.000	69.33	69.33	69.33	69.33	69.33	69.33	69.33	69.33	69.33	69.33	69.33	69.33	69.33	69.33	69.33	69.33	68.27	66.20	64.25	63.63
52.125	69.33	69.33	69.33	69.33	69.33	69.33	69.33	69.33	69.33	69.33	69.33	69.33	67.84	66.82	65.04	64.01	63.10	61.55	60.32	60.00

APPROVED AS COMPLYING WITH THE
SOUTH FLORIDA BUILDING CODE
DATE JUL 05 2001
BY Manuel Perez
PRODUCT CONTROL DIVISION
BUILDING CODE COMPLIANCE OFFICE
ACCEPTANCE NO. 01-0226.04

COMPARATIVE ANALYSIS (NEGATIVE LOADS)

Table 4B PA-14 Single Hung Window Negative Design Loads

Based on Comparative Analysis with DSB 1/8" Tempered Glass/ ASTM E1300 &

Non-structural Test Report: ATL#0514.01-98 Structural Test Report MTL # 16610 UNIT A

WINDOW WIDTH	WINDOW HEIGHT (INCHES)																			
	24	25	28	30	32	36	37.375	40	44	48	49.625	52	55.5	57	60	62	64	68	72	73.187
18.125	-120.00	-120.00	-120.00	-120.00	-120.00	-120.00	-120.00	-120.00	-120.00	-120.00	-120.00	-120.00	-120.00	-120.00	-120.00	-120.00	-120.00	-120.00	-120.00	-120.00
24.000	-120.00	-120.00	-120.00	-120.00	-120.00	-120.00	-120.00	-120.00	-120.00	-120.00	-120.00	-120.00	-120.00	-120.00	-120.00	-120.00	-120.00	-120.00	-120.00	-120.00
25.500	-120.00	-120.00	-120.00	-120.00	-120.00	-120.00	-120.00	-120.00	-120.00	-120.00	-120.00	-120.00	-120.00	-120.00	-120.00	-120.00	-120.00	-120.00	-120.00	-120.00
28.000	-120.00	-120.00	-120.00	-120.00	-120.00	-120.00	-120.00	-120.00	-120.00	-120.00	-120.00	-120.00	-120.00	-120.00	-120.00	-120.00	-120.00	-120.00	-116.64	-115.27
30.000	-120.00	-120.00	-120.00	-120.00	-120.00	-120.00	-120.00	-120.00	-120.00	-120.00	-120.00	-120.00	-120.00	-120.00	-120.00	-118.33	-115.81	-111.09	-106.73	-105.50
32.000	-120.00	-120.00	-120.00	-120.00	-120.00	-120.00	-120.00	-120.00	-120.00	-120.00	-120.00	-120.00	-116.64	-114.68	-110.94	-108.58	-106.31	-102.06	-98.14	-97.03
36.000	-120.00	-120.00	-120.00	-120.00	-120.00	-120.00	-120.00	-119.03	-112.54	-107.46	-105.73	-103.09	-99.15	-97.55	-94.50	-92.57	-90.72	-87.23	-84.00	-83.09
40.000	-120.00	-120.00	-120.00	-116.64	-113.40	-107.43	-105.52	-102.06	-97.01	-92.11	-90.40	-88.17	-85.38	-84.17	-81.65	-80.05	-78.51	-75.60	-72.90	-72.14
44.000	-109.16	-107.57	-103.09	-100.31	-97.67	-92.78	-91.21	-88.36	-84.35	-80.59	-78.96	-76.79	-74.04	-73.00	-71.14	-70.02	-68.73	-66.27	-63.99	-63.34
48.000	-94.50	-93.21	-89.53	-87.23	-85.05	-81.00	-79.70	-77.32	-73.96	-70.88	-69.70	-68.02	-65.36	-64.35	-62.52	-61.43	-60.44	-58.66	-56.70	-56.15
50.000	-88.27	-87.09	-83.74	-81.65	-79.66	-75.95	-74.76	-72.58	-69.49	-66.65	-65.56	-64.04	-61.74	-60.75	-58.95	-57.87	-56.89	-55.16	-53.54	-53.02
52.125	-82.31	-81.24	-78.20	-76.29	-74.48	-71.10	-70.01	-68.01	-65.18	-62.39	-60.85	-58.89	-56.54	-55.68	-54.20	-53.35	-52.58	-51.29	-50.26	-50.00

ROBT. E. FISHER
WM. M. MEYERS, P.E.
Consulting Engineers
9301 N.E. 6th Ave. C-300
Miami Shores, FL 33138
(305) 758-3117 557-4006 Fax 362-8282

FLA. 18755
STRUCTURAL

Date: 06/07/01

TABLE No.	GLASS TYPE	REINFORCEMENT	SEE DRAWING #'s
1	3/16" ANNEALED	NONE	PA-14DC-04
2	3/16" TEMPERED	NONE	PA-14DC-05
3	3/16" TEMPERED	STEEL	PA-14DC-06
4	DSB 1/8" TEMPERED	NONE	PA-14DC-07
5	DSB 1/8" ANNEALED	NONE	PA-14DC-08
6	SSB 3/32" ANNEALED	NONE	PA-14DC-08

NOTE
Window widths and window heights on charts are for comparative analysis.
Check with manufacturer for availability of product.

Revision Notes:
A- REVISED AS PER DADE COUNTY REQUEST
B- Design pressure changed according to ASTM E1300

BINNINGS PAN AMERICAN
ARCHITECTURAL PRODUCTS CORP COMPANY
3000 N.W. 125th Street
Miami, Florida 33167
(305)681-0045

Perimeter: -----	Area: -----	Wgt/Ft: -----			
Material: -----	Surface Area: -----	Ext. Class: -----	Draw Class: CHART	Part Class: ---	Prod Category: SH
Factor: -----	CCD: -----	Scale: -----	Series/Model: PA-14	Item: COMP. ANAL.	Sheet: 7 of 8
Drawn By: PJS		Date Drawn: 10/22/97	PA-14 SINGLE HUNG COMPARATIVE ANALYSIS		
Revised By: RR		Date Revised: 6/4/01	Part Number: ---	Drawing Number: PA-14DC-07B	Revision Level: B

COMPARATIVE ANALYSIS (POSITIVE LOADS)

Table 5A PA-14 Single Hung Window Positive Design Loads

Based on Comparative Analysis with DSB 1/8" Annealed Glass/ ASTM E1300

Non-structural Test Report: ATL#0514.01-98 Structural Test Report MTL #16610 Unit B

WINDOW WIDTH	WINDOW HEIGHT (INCHES)															
	24	25	28	30	32	36	37.375	40	44	48	49.625	52	55.5	57	60	62
18.125	52.00	52.00	52.00	52.00	52.00	52.00	52.00	52.00	52.00	52.00	52.00	52.00	52.00	52.00	52.00	52.00
24.000	52.00	52.00	52.00	52.00	52.00	52.00	52.00	52.00	52.00	52.00	52.00	52.00	52.00	52.00	52.00	52.00
25.500	52.00	52.00	52.00	52.00	52.00	52.00	52.00	52.00	52.00	52.00	52.00	52.00	52.00	52.00	52.00	52.00
28.000	52.00	52.00	52.00	52.00	52.00	52.00	52.00	52.00	52.00	52.00	52.00	25.00	52.00	52.00	52.00	52.00
30.000	52.00	52.00	52.00	52.00	52.00	52.00	52.00	52.00	52.00	52.00	52.00	52.00	52.00	52.00	52.00	52.00
32.000	52.00	52.00	52.00	52.00	52.00	52.00	52.00	52.00	52.00	52.00	52.00	52.00	52.00	52.00	52.00	48.00
36.000	52.00	52.00	52.00	52.00	52.00	52.00	52.00	52.00	52.00	52.00	52.00	52.00	50.00	50.00	48.00	47.00

COMPARATIVE ANALYSIS (NEGATIVE LOADS)

Table 5B PA-14 Single Hung Window Negative Design Loads

Based on Comparative Analysis with DSB 1/8" Annealed Glass/ ASTM E1300

Non-structural Test Report: ATL#0514.01-98 Structural Test Report MTL #16610 Unit B

WINDOW WIDTH	WINDOW HEIGHT (INCHES)															
	24	25	28	30	32	36	37.375	40	44	48	49.625	52	55.5	57	60	62
18.125	-52.00	-52.00	-52.00	-52.00	-52.00	-52.00	-52.00	-52.00	-52.00	-52.00	-52.00	-52.00	-52.00	-52.00	-52.00	-52.00
24.000	-52.00	-52.00	-52.00	-52.00	-52.00	-52.00	-52.00	-52.00	-52.00	-52.00	-52.00	-52.00	-52.00	-52.00	-52.00	-52.00
25.500	-52.00	-52.00	-52.00	-52.00	-52.00	-52.00	-52.00	-52.00	-52.00	-52.00	-52.00	-52.00	-52.00	-52.00	-52.00	-52.00
28.000	-52.00	-52.00	-52.00	-52.00	-52.00	-52.00	-52.00	-52.00	-52.00	-52.00	-52.00	-52.00	-52.00	-52.00	-52.00	-52.00
30.000	-52.00	-52.00	-52.00	-52.00	-52.00	-52.00	-52.00	-52.00	-52.00	-52.00	-52.00	-52.00	-52.00	-52.00	-52.00	-52.00
32.000	-52.00	-52.00	-52.00	-52.00	-52.00	-52.00	-52.00	-52.00	-52.00	-52.00	-52.00	-52.00	-52.00	-52.00	-52.00	-48.00
36.000	-52.00	-52.00	-52.00	-52.00	-52.00	-52.00	-52.00	-52.00	-52.00	-52.00	-52.00	-52.00	-50.00	-50.00	-48.00	-47.00

COMPARATIVE ANALYSIS (POSITIVE LOADS)

Table 6A PA-14 Single Hung Window Positive Design Loads

Based on Comparative Analysis with SSB 3/32" Annealed Glass/ ASTM E1300

Non-structural Test Report: MTL# 16029

Structural Test Report MTL # 16610 Unit C

WINDOW WIDTH	WINDOW HEIGHT (INCHES)						
	24	25	28	30	32	36	37.375
18.125	52.00	52.00	52.00	52.00	52.00	52.00	52.00
24.000	52.00	52.00	52.00	52.00	52.00	52.00	52.00
25.500	52.00	52.00	52.00	52.00	52.00	52.00	52.00
28.000	52.00	52.00	52.00	52.00	52.00	52.00	52.00
30.000	52.00	52.00	52.00	52.00	52.00	51.00	51.00
32.000	52.00	52.00	50.00	49.00	48.00	47.00	40.00
36.000	52.00	51.00	45.00	42.00	40.00	40.00	39.00

COMPARATIVE ANALYSIS (NEGATIVE LOADS)

Table 6B PA-14 Single Hung Window Positive Design Loads

Based on Comparative Analysis with SSB 3/32" Annealed Glass/ ASTM E1300

Non-structural Test Report: MTL# 16029

Structural Test Report MTL # 16610 Unit C

WINDOW WIDTH	WINDOW HEIGHT (INCHES)						
	24	25	28	30	32	36	37.375
18.125	-52.00	-52.00	-52.00	-52.00	-52.00	-52.00	-52.00
24.000	-52.00	-52.00	-52.00	-52.00	-52.00	-52.00	-52.00
25.500	-52.00	-52.00	-52.00	-52.00	-52.00	-52.00	-52.00
28.000	-52.00	-52.00	-52.00	-52.00	-52.00	-52.00	-52.00
30.000	-52.00	-52.00	-52.00	-52.00	-52.00	-51.00	-51.00
32.000	-52.00	-52.00	-50.00	-49.00	-48.00	-47.00	-40.00
36.000	-52.00	-51.00	-45.00	-42.00	-40.00	-40.00	-39.00

APPROVED AS COMPLYING WITH THE
SOUTH FLORIDA BUILDING CODE
DATE JUL 05 2001
BY Manuel Perez
PRODUCT CONTROL DIVISION
BUILDING CODE COMPLIANCE OFFICE
ACCEPTANCE NO. 01-0226.04

ROBT. E. FISHER
WM. M. MEYERS, P.E.
Consulting Engineers
9301 N.E. 6th Ave. C-300
Miami Shores, FL 33138
(305) 758-3117 557-4006 Fax 362-6282

FLA. 18755
STRUCTURAL

Date: 06/07/01

TABLE No.	GLASS TYPE	REINFORCEMENT	SEE DRAWING #'s
1	3/16" ANNEALED	NONE	PA-14DC-04
2	3/16" TEMPERED	NONE	PA-14DC-05
3	3/16" TEMPERED	STEEL	PA-14DC-06
4	DSB 1/8" TEMPERED	NONE	PA-14DC-07
5	DSB 1/8" ANNEALED	NONE	PA-14DC-08
6	SSB 3/32" ANNEALED	NONE	PA-14DC-08

NOTE
Window widths and window heights on charts are for comparative analysis.
Check with manufacturer for availability of product.

Revision Notes:
A- REVISED AS PER DADE COUNTY REQUEST
B- Design pressure changed according to ASTM E1300

BINNINGS PAN AMERICAN
ODUOTS CORP COMPANY

3000 N.W. 125th Street
Miami, Florida 33167
(305)681-0045

Perimeter:	Area:	Wgt/Ft:
-----	-----	-----
Material:	**Surface Area:**	**Est. Class:**
-----	-----	-----
Faster:	**CCD:**	**Scale:**
-----	-----	-----
Drawn By: PJS		**Date Drawn:** 10/22/97
Revised By: RR		**Date Revised:** 5/31/01

Draw Class:	Part Class:	Prod Category:	Series/Model:	Item:	Sheet:
CHART	---	SH	PA-14	COMP. ANAL.	8 of 8

PA-14 SINGLE HUNG COMPARATIVE ANALYSIS

Part Number:	Drawing Number:	Revision Level:
---	PA-14DC-08B	B