MIAMI-DADE COUNTY, FLORIDA
METRO-DADE FLAGLER BUILDING

BUILDING CODE COMPLIANCE OFFICE
METRO-DADE FLAGLER BUILDING
140 WEST FLAGLER STREET, SUITE 1603
MIAMI, FLORIDA 33130-1563
(305) 375-2901 FAX (305) 375-2908

CONTRACTOR LICENSING SECTION
(305) 375-2527 FAX (305) 375-2558

CONTRACTOR ENFORCEMENT DIVISION
(305) 375-2966 FAX (305) 375-2908

PRODUCT CONTROL DIVISION
(305) 375-2902 FAX (305) 372-6339

PRODUCT CONTROL NOTICE OF ACCEPTANCE

CertainTeed Corporation (PA)
1400 Union Meeting Road P.O. Box 1100
Blue Bell ,PA 19422-0761

Your application for Notice of Acceptance (NOA) of:
Celotex Dimensional 30, Celotex Dimensional 30 AR, Celotex Dimensional 40, & Celotex Dimensional 40 AR
under Chapter 8 of the Code of Miami-Dade County governing the use of Alternate Materials and Types of Construction, and completely described herein, has been recommended for acceptance by the Miami-Dade County Building Code Compliance Office (BCCO) under the conditions specified herein.

This NOA shall not be valid after the expiration date stated below. BCCO reserves the right to secure this product or material at any time from a jobsite or manufacturer's plant for quality control testing. If this product or material fails to perform in the approved manner, BCCO may revoke, modify, or suspend the use of such product or material immediately. BCCO reserves the right to revoke this approval, if it is determined by BCCO that this product or material fails to meet the requirements of the South Florida Building Code.

The expense of such testing will be incurred by the manufacturer.

ACCEPTANCE NO.: 01-0312.03
EXPIRES: 05/03/2006

Raul Rodriguez
Chief Product Control Division

THIS IS THE COVERSHEET, SEE ADDITIONAL PAGES FOR SPECIFIC AND GENERAL CONDITIONS
BUILDING CODE & PRODUCT REVIEW COMMITTEE

This application for Product Approval has been reviewed by the BCCO and approved by the Building Code and Product Review Committee to be used in Miami-Dade County, Florida under the conditions set forth above.

Francisco J. Quintana, R.A.
Director
Miami-Dade County
Building Code Compliance Office

APPROVED: 05/03/2001

ROOFING ASSEMBLY APPROVAL

Category: Roofing
Sub-Category: 07310 Composition Shingles
Materials Dimensional
Deck Type: Wood

Approval Date: **May 3, 2001**
Expiration Date: **May 3, 2006**

1. SCOPE:

This new roofing system using **Celotex Dimensional 30, Celotex Dimensional 30AR, Celotex Dimensional 40 and Celotex Dimensional 40AR** Asphalt Shingles, manufactured by **CertainTeed Corporation**. as described in this Notice of Acceptance, designed to comply with the South Florida Building Code, 1994 Edition for Miami-Dade County. For the locations where mean roof height, as determined by applicable building code, does not exceed 33 feet.

2. PRODUCT DESCRIPTION

Product	Dimensions	Test Specifications	Product Description
Celotex Dimensional 30 & Celotex Dimensional 30AR	13¼" x 38 ¾"	PA 110	A heavy weight, 264lb/sq, dimensional asphalt shingle.
Celotex Dimensional 40 & Celotex Dimensional 40AR	13¼" x 38 ¾"	PA 110	A heavy weight, 314lb/sq, dimensional asphalt shingle.

3. LIMITATIONS

3.1 Fire classification is not part of this acceptance, refer to a current Approved Roofing Materials Directory for fire ratings of this product.

3.2 Shall not be installed on roof mean heights in excess of 33 ft.

4. INSTALLATION

4.1 Shingles shall be installed in compliance with Miami-Dade County Product Control Shingle Installation Procedure No. 115.

4.2 Flashings shall be in accordance with Section 9.3 Option "B" (Step-flashings) of Miami-Dade County Product Control Shingle Installation Procedure No. 115

4.3 The manufacturer shall provide clearly written application instructions.

4.4 Exposure and course layout shall be in compliance with Detail 'A', attached.

4.5 Nailing shall be in compliance with Detail 'B', attached.

5. LABELING

5.1 Shingles shall be labeled with the Miami-Dade Logo or the wording "Miami-Dade County- Product Control Approved".

6. BUILDING PERMIT REQUIREMENTS

6.1 Application for building permit shall be accompanied by copies of the following:

6.1.1 This Notice of Acceptance.

6.1.2 Any other documents required by the Building Official or the applicable Building Code in order to properly evaluate the installation of this system.

Frank Zuloaga, RRC
Roofing Product Control Examiner

DETAIL A

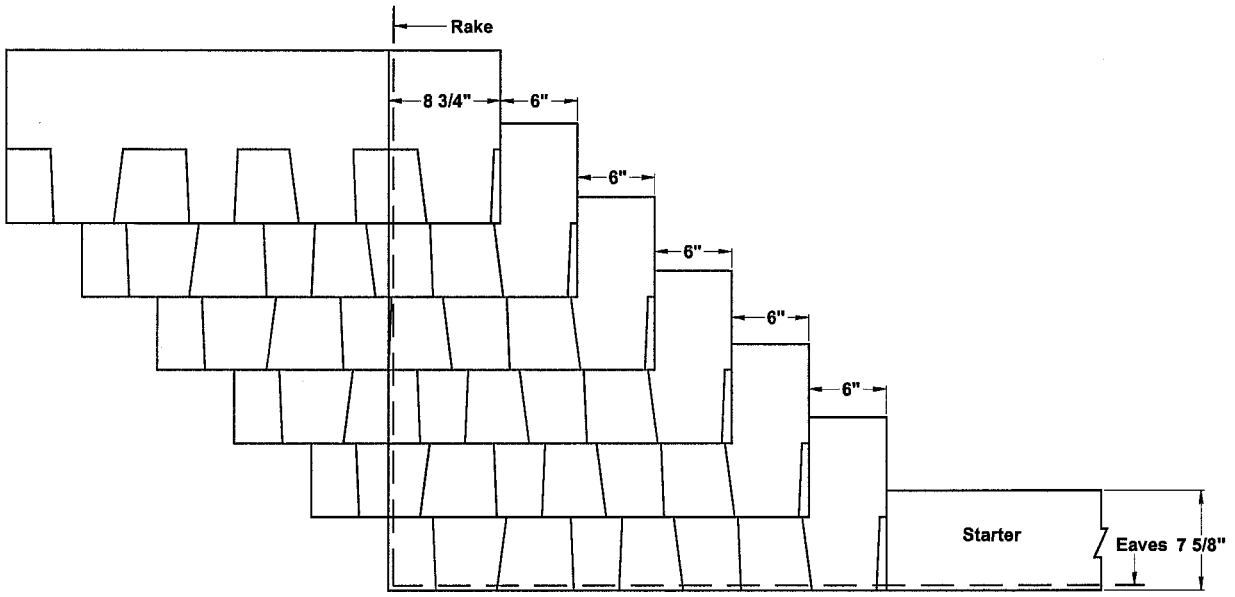

DETAIL B

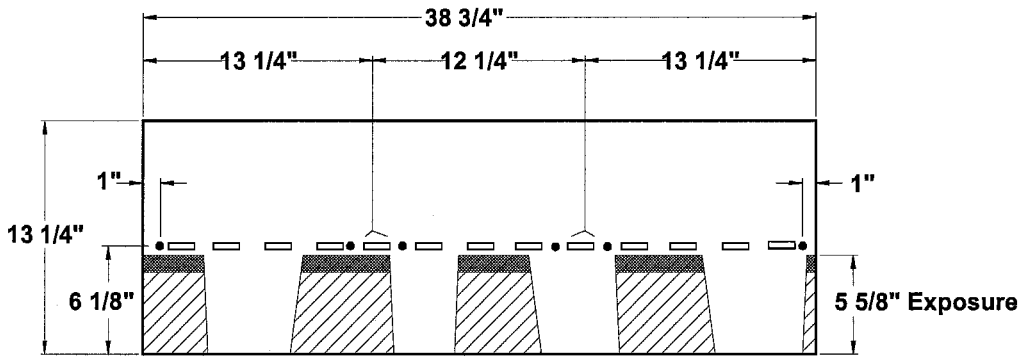

Frank Zuloaga, RRC
Roofing Product Control Examiner

NOTICE OF ACCEPTANCE STANDARD CONDITIONS

1 Renewal of this Acceptance (approval) shall be considered after a renewal application has been filed and the original submitted documentation, including test supporting data, engineering documents, are no older than eight (8) years.

2 Any and all approved products shall be permanently labeled with the manufacturer's name, city, state, and the following statement: "Miami-Dade County Product Control Approved", or as specifically stated in the specific conditions of this Acceptance.

3 Renewals of Acceptance will not be considered if:
a) There has been a change in the South Florida Building Code affecting the evaluation of this product and the product is not in compliance with the code changes;
b) The product is no longer the same product (identical) as the one originally approved;
c) If the Acceptance holder has not complied with all the requirements of this acceptance, including the correct installation of the product;
d) The engineer who originally prepared, signed and sealed the required documentation initially submitted, is no longer practicing the engineering profession.

4 Any revision or change in the materials, use, and/or manufacture of the product or process shall automatically be cause for termination of this Acceptance, unless prior written approval has been requested (through the filing of a revision application with appropriate fee) and granted by this office.

5 Any of the following shall also be grounds for removal of this Acceptance:
a) Unsatisfactory performance of this product or process;
b) Misuse of this Acceptance as an endorsement of any product, for sales, advertising or any other purposes.

6 The Notice of Acceptance number preceded by the words Miami-Dade County, Florida, and followed by the expiration date may be displayed in advertising literature. If any portion of the Notice of Acceptance is displayed, then it shall be done in its entirety.

7 A copy of this Acceptance as well as approved drawings and other documents, where it applies, shall be provided to the user by the manufacturer or its distributors and shall be available for inspection at the job site at all times. The copies need not be resealed by the engineer.

8 Failure to comply with any section of this Acceptance shall be cause for termination and removal of Acceptance.

9 This Acceptance contains pages 1 through 4.

END OF THIS ACCEPTANCE

Frank Zuloaga, RRC
Roofing Product Control Examiner

NOTICE OF ACCEPTANCE: EVIDENCE SUBMITTED
(For File ONLY. Not part of NOA.)

A. EVIDENCE SUBMITTED:

Test Agency/Identifier	Name	Report	Date
Underwriters Laboratories, Inc.	PA 107	94NK9632	11/30/00
Underwriters Laboratories, Inc.	Letter	R684	04/02/01
PRI Asphalt Technologies, Inc.	PA 100	PCTC-01-02-01	01/12/01

B. OTHER

1. Notice of Acceptance number 01-0312.03

Frank Zuloaga, RRC
Roofing Product Control Examiner