MIAMI-DADE

BUILDING CODE COMPLIANCE OFFICE (BCCO)
PRODUCT CONTROL DIVISION

MIAMI-DADE COUNTY, FLORIDA
METRO-DADE FLAGLER BUILDING
140 WEST FLAGLER STREET, SUITE 1603
MIAMI, FLORIDA 33130-1563
(305) 375-2901 FAX (305) 375-2908

NOTICE OF ACCEPTANCE (NOA)

Madden Manufacturing Co.
1889 N. W. 22nd Street
Pompano Beach, FL 33069

SCOPE:
This NOA is being issued under the applicable rules and regulations governing the use of construction materials. The documentation submitted has been reviewed by Miami-Dade County Product Control Division and accepted by the Board of Rules and Appeals (BORA) to be used in Miami Dade County and other areas where allowed by the Authority Having Jurisdiction (AHJ).

This NOA shall not be valid after the expiration date stated below. The Miami-Dade County Product Control Division (In Miami Dade County) and/or the AHJ (in areas other than Miami Dade County) reserve the right to have this product or material tested for quality assurance purposes. If this product or material fails to perform in the accepted manner, the manufacturer will incur the expense of such testing and the AHJ may immediately revoke, modify, or suspend the use of such product or material within their jurisdiction. BORA reserves the right to revoke this acceptance, if it is determined by Miami-Dade County Product Control Division that this product or material fails to meet the requirements of the applicable building code.

This product is approved as described herein, and has been designed to comply with the High Velocity Hurricane Zone of the Florida Building Code.

DESCRIPTION: 0.050" Aluminum Storm Panels Shutter

APPROVAL DOCUMENT: Drawing No. 00-380, titled "0.050" Aluminum Storm Panels", sheets 1 through 10 of 10, prepared by Knezevich & Associates, Inc., dated March 6, 2001, last revision #2 dated February 19, 2002, bearing the Miami-Dade County Product Control Approval stamp with the Notice of Acceptance number and approval date by the Miami-Dade County Product Control Division.

MISSILE IMPACT RATING: Large and Small Missile Impact

LABELING: Each unit shall bear a permanent label with the manufacturer's name or logo, city, state and following statement: "Miami-Dade County Product Control Approved", unless otherwise noted herein.

RENEWAL of this NOA shall be considered after a renewal application has been filed and there has been no change in the applicable building code negatively affecting the performance of this product.

TERMINATION of this NOA will occur after the expiration date or if there has been a revision or change in the materials, use, and/or manufacture of the product or process. Misuse of this NOA as an endorsement of any product, for sales, advertising or any other purposes shall automatically terminate this NOA. Failure to comply with any section of this NOA shall be cause for termination and removal of NOA.

ADVERTISEMENT: The NOA number preceded by the words Miami-Dade County, Florida, and followed by the expiration date may be displayed in advertising literature. If any portion of the NOA is displayed, then it shall be done in its entirety.

INSPECTION: A copy of this entire NOA shall be provided to the user by the manufacturer or its distributors and shall be available for inspection at the job site at the request of the Building Official.
This NOA **revises and renews NOA # 98-1110.03** and consists of this page 1 as well as approval document mentioned above.
The submitted documentation was reviewed by **Helmy A. Makar, P.E.**

PRODUCT CONTROL ACCEPTED

NOA No 01-0313.20
Expiration Date: 03/13/2008
Approval Date: 03/21/2002

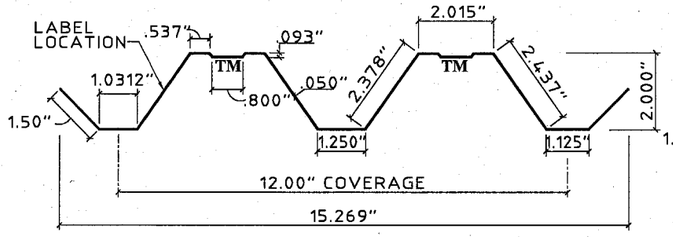

1 ALUMINUM STORM PANEL
SCALE : 1/4" = 0'-1"

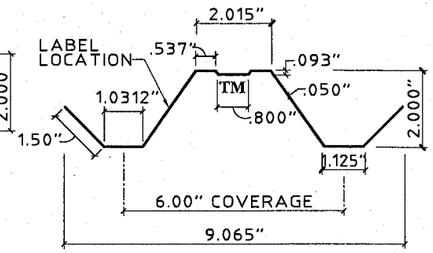

1a ALUMINUM HALF STORM PANEL
SCALE : 1/4" = 0'-1"

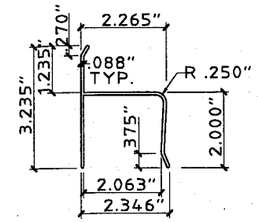

2 "h" HEADER
SCALE : 1/4" = 0'-1"

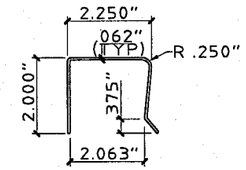

3 "U" HEADER
SCALE : 1/4" = 0'-1"

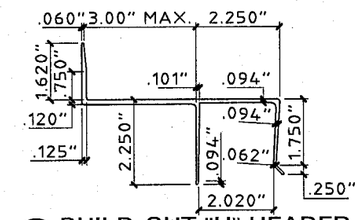

3a BUILD-OUT "U" HEADER
SCALE : 1/4" = 0'-1"

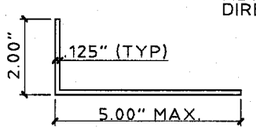

4 ANGLE
SCALE : 1/4" = 0'-1"

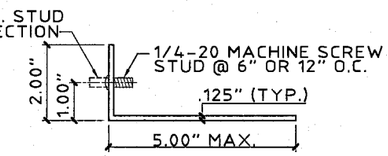

4a STUDDED ANGLE
SCALE : 1/4" = 0'-1"

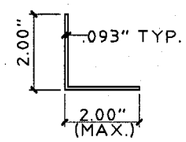

5 ANGLE
SCALE : 1/4" = 0'-1"

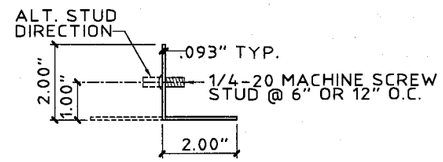

6 STUDDED ANGLE
SCALE : 1/4" = 0'-1"

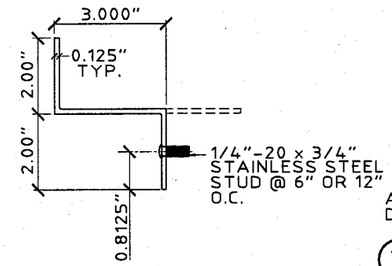

6a Z-STUD TRACK
SCALE : 3" = 1' - 0"

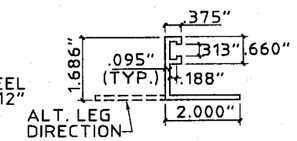

7 "E" TRACK
SCALE : 1/4" = 0'-1"

GENERAL NOTES:

1. THIS STORM PANEL SHUTTER SYSTEM IS DESIGNED AND TESTED IN ACCORDANCE WITH THE FLORIDA BUILDING CODE.
2. POSITIVE AND NEGATIVE DESIGN PRESSURE CALCULATIONS SHALL BE PERFORMED FOR SPECIFIC JOBS.
3. PRODUCT MARKINGS SHALL BE WITHIN 12" OF ONE END OF THE PANEL WITH A MINIMUM OF ONE MARKING PER PANEL AND SHALL BE LABELED AS FOLLOWS:
   MADDEN MANUFACTURING COMPANY
   POMPANO BEACH, FLORIDA
   MIAMI-DADE COUNTY PRODUCT CONTROL APPROVED
4. STORM PANELS HAVE BEEN TESTED IN ACCORDANCE WITH THE MIAMI-DADE COUNTY PROTOCOLS PA 201, PA 202, AND PA 203. DESIGN IS BASED ON CONSTRUCTION TESTING CORPORATION (C.T.C.) TEST REPORTS No. 96-014, 00-050 AND 01-027.
5. ALUMINUM STORM PANELS SHALL BE 5052-H32 OR 3004-H34 ALUMINUM ALLOY, 0.050" THICKNESS. ALL EXTRUSIONS SHALL BE 6063-T6 ALUMINUM ALLOY, U.O.N.
6. ALL FASTENERS AND BOLTS TO BE 2024-T4 ALUMINUM ALLOY, STAINLESS STEEL, OR GALVANIZED STEEL WITH A 33 K.S.I. MINIMUM YIELD STRENGTH.
7. FOR INSTALLATIONS 30 FEET OR LESS ABOVE GRADE, AN OPTIONAL 1" x 1" x 18 GAGE (t= 0.050" MIN.) STEEL BAR MAY BE USED TO CONTROL DEFLECTION OF STORM PANEL SYSTEM PROVIDED THAT THE PANEL SPANS USED ARE 104" OR LESS, AND THAT THE SEPARATION FROM THE GLASS IS 2" OR MORE BUT LESS THAN 3-3/4". STEEL BAR MAY BE USED FASTENED AT PANEL OVERLAPS, AT MIDSPAN, WITH 1/4-20 x 4" BOLTS AND DIE CAST ALUMINUM WASHERED WINGNUTS. SEE MINIMUM PANEL SEPARATION FROM GLASS SCHEDULE FOR REDUCED SEPARATIONS.
8. TOP AND BOTTOM DETAILS MAY BE INTERCHANGED AS FIELD CONDITIONS REQUIRE. PANELS MAY ALSO BE MOUNTED WITH STUD ANGLE OR DIRECT MOUNTED HORIZONTALLY.
9. THE PERMIT HOLDER SHALL VERIFY THE ADEQUACY OF THE EXISTING STRUCTURE TO SUSTAIN THE NEW SUPERIMPOSED LOADS AND TO VERIFY ALL DIMENSIONS AT THE JOB SITE BEFORE COMMENCING WITH THE WORK.
10. AT LEAST ONE WARNING NOTE PER OPENING SHALL BE PLACED IN A CONSPICUOUS LOCATION ON ANY OF THE COMPONENTS OF STORM PANEL SYSTEM ADVISING THE HOME OWNER OR TENANT THAT "STORM PANELS WILL NOT OFFER HURRICANE PROTECTION UNLESS STEEL TUBE & BOLTS ARE PROPERLY INSTALLED WHEN NEEDED".

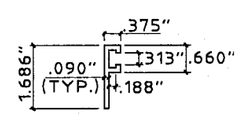

7a "F" TRACK
SCALE : 1/4" = 0'-1"

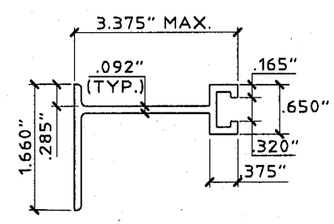

7b BUILD-OUT "F" TRACK
SCALE : HALF SIZE

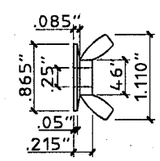

ZAMAC

8 WINGNUT
SCALE : HALF SIZE

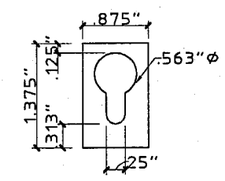

20 GA. GALV. STEEL (t= .038")
GRADE 40 OR 0.050" ALUM ALLOY (3004 H34)

10 KEYHOLE WASHER
SCALE : HALF SIZE

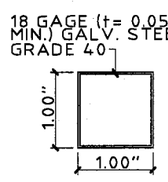

11 OPTIONAL STEEL BAR
SCALE : HALF SIZE

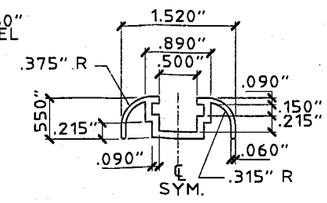

12 "C" TRACK (FINISH)
SCALE : HALF SIZE

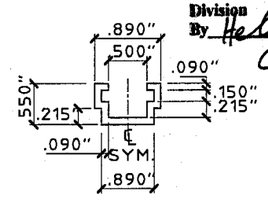

13 "C" TRACK
SCALE : HALF SIZE

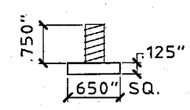

1/4-20 x 3/4"
MACHINE SCREW

14 SQUARE HEAD MACHINE SCREW
N.T.S

Approved as complying with the Florida Building Code
Date 03/21/2002
NOA# 01-0513.20
Miami Dade Product Control Division
By

KNEZEVICH & ASSOCIATES, INC.
CONSULTING ENGINEERS • PRODUCT TESTING
1260 N. UNIVERSITY DRIVE, SUITE 180 • FORT LAUDERDALE, FL 33322
TEL: (954) 382-2800 • FAX: (954) 382-2989 • FLORIDA COA #3205
WEBSITE: WWW.KNEZEVICH.COM • E-MAIL: KA@KNEZEVICH.COM

COPYRIGHT © 2001 KNEZEVICH & ASSOCIATES, INC.

0.050" ALUMINUM STORM PANELS

MADDEN Manufacturing
1881 N.W. 22nd Street
Pompano Beach, FL 33064
Phone (954) 915-2071
Fax (954) 960-0561
www.maddenmetal.com
STORM PANELS • RAINBOW PRODUCTS

revisions

no	date	by	description
0	03/06/01	VJK	PREV. DRAWING No. 96-110
1	01/17/02	WAS	ADD TESTING & BECO COMMENTS
2	02/19/02	WAS	COUNTY COMMENTS

V.J. KNEZEVICH
PROFESSIONAL ENGINEER
FL License No: PE 0010983

FEB 19 2002

date 03/06/01	
scale AS NOTED	drawn by AV
design by VJK	checked by VJK

drawing no. 00-380

sheet 1 of 10

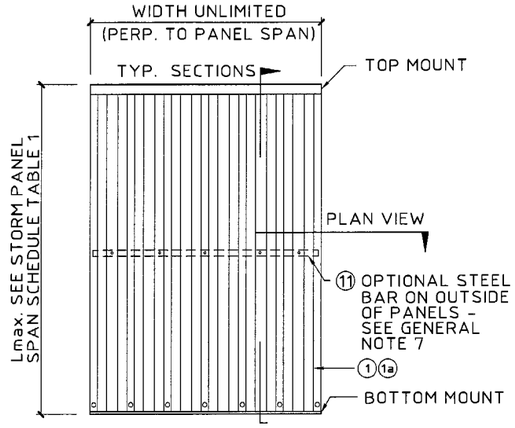

TYPICAL VERTICAL MOUNT ELEVATION

N.T.S.

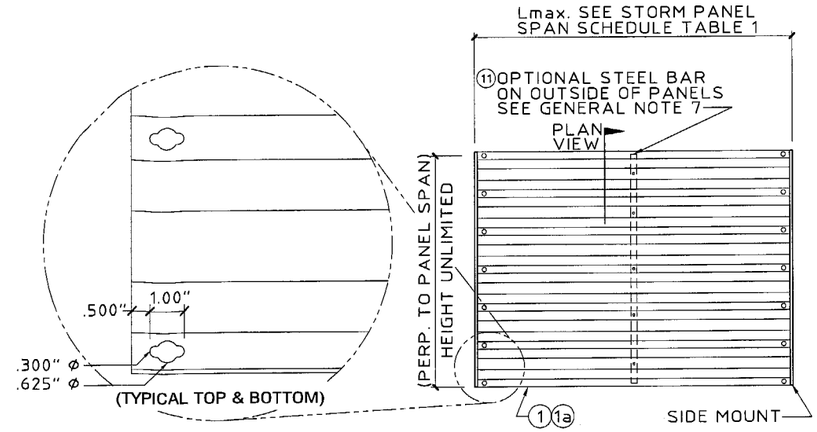

HORIZONTAL MOUNT ELEVATION

N.T.S.

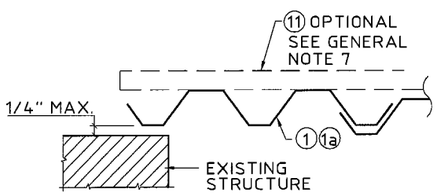

(A) WALL MOUNT

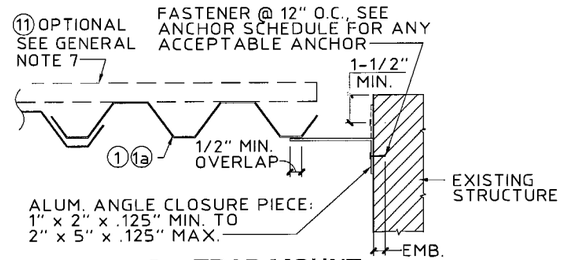

(B) TRAP MOUNT

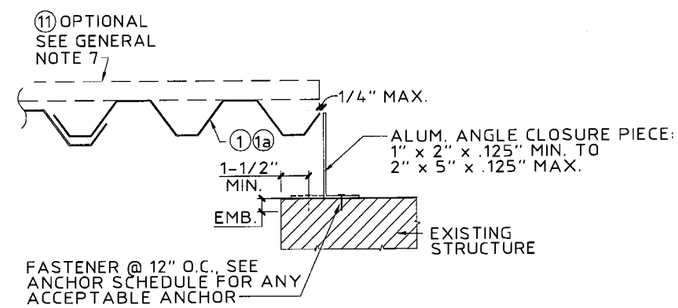

(B1) BUILD-OUT

Approved as complying with the Florida Building Code
Date 03/21/2002
NOA# 01-0313.20
Miami Dade Product Control Division
By

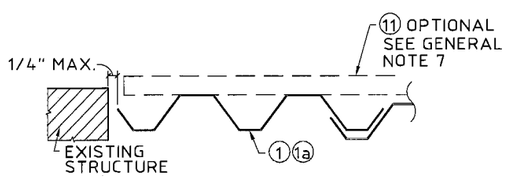

(C) TRAP MOUNT

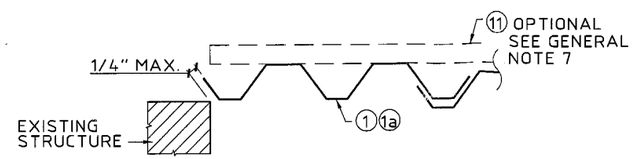

(D) FACE MOUNT

TYPICAL CLOSURE DETAILS (PLAN VIEWS)

SCALE: 1-1/2" = 1'-0"

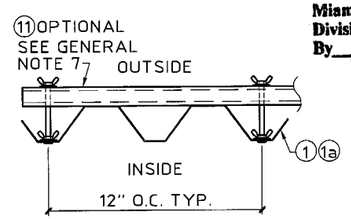

TYPICAL BAR ATTACHMENT

(USE ONLY WHEN IMPROVED DEFLECTION REQUIRED)

KNEZEVICH & ASSOCIATES, INC.
CONSULTING ENGINEERS • PRODUCT TESTING
1260 N. UNIVERSITY DRIVE, SUITE 180 • FORT LAUDERDALE, FL 33322
TEL: (954) 382-2800 • FAX: (954) 382-2989 • FLORIDA COA #3205
WEBSITE: WWW.KNEZEVICH.COM • E-MAIL: KA@KNEZEVICH.COM
COPYRIGHT © 2001 KNEZEVICH & ASSOCIATES, INC.

0.050" ALUMINUM STORM PANELS

MADDEN Manufacturing
STORM PANELS • RAINBOW PRODUCTS
1884 NW 22nd Street
Pompano Beach, FL 33064
Phone (954) 915-2011
Fax (954) 960-0561
www.maddenmetal.com

revisions

no	date	by	description
0	03/06/01	VJK	PREV. DRAWING No. 96-110
1	01/17/02	WAS	ADD TESTING & BCCO COMMENTS
2	02/19/02	WAS	COUNTY COMMENTS

V.J. KNEZEVICH
PROFESSIONAL ENGINEER
FL License No: PE 0010983

FEB 19 2002

date 03/06/01	
scale AS NOTED	drawn by AV
design by VJK	checked by VJK
drawing no. 00-380	
sheet 2 of 10	

02/12/02 09:53

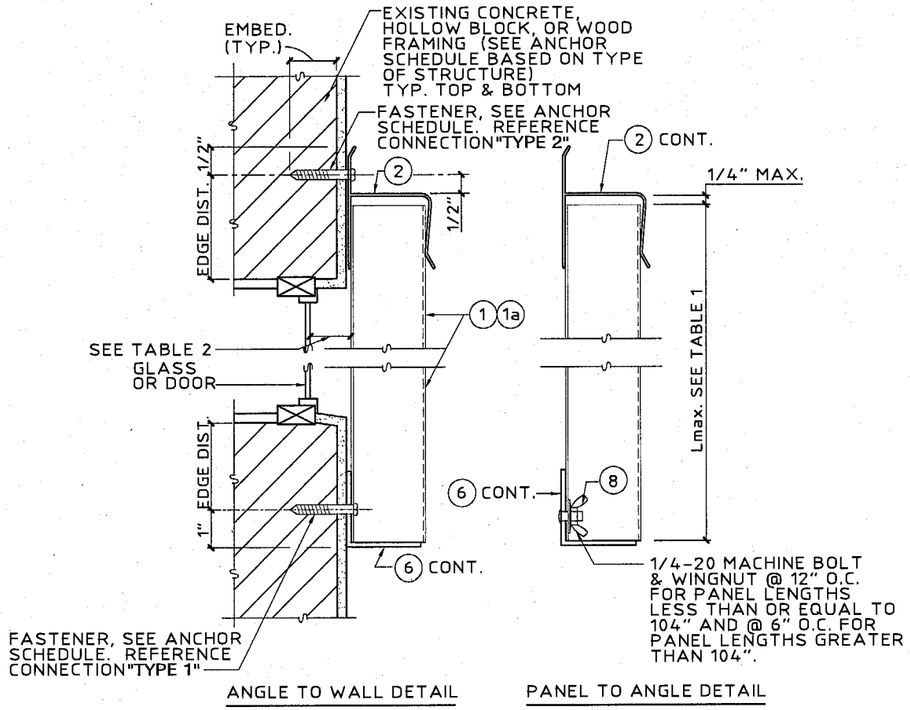

E WALL MOUNT SECTION

SCALE : 3" = 1'-0"

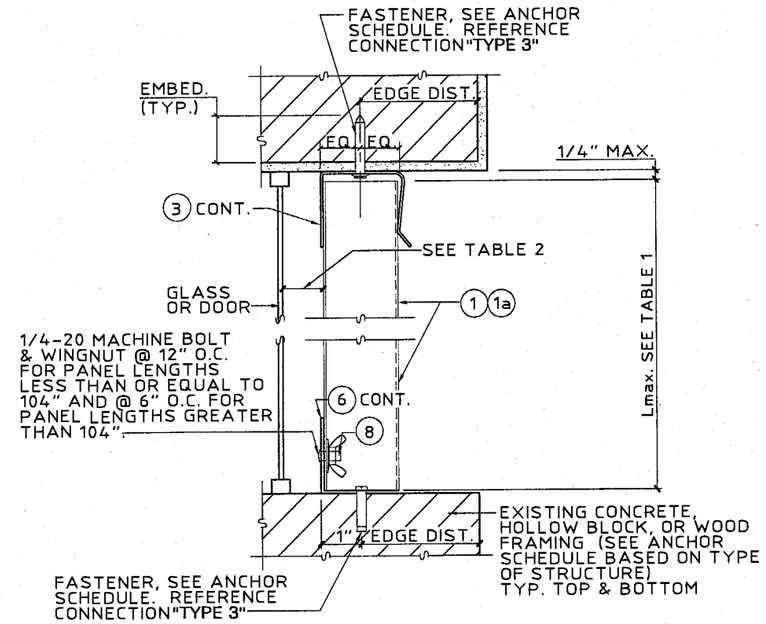

G CEILING/INSIDE MOUNT SECTION

SCALE : 3" = 1'-0"

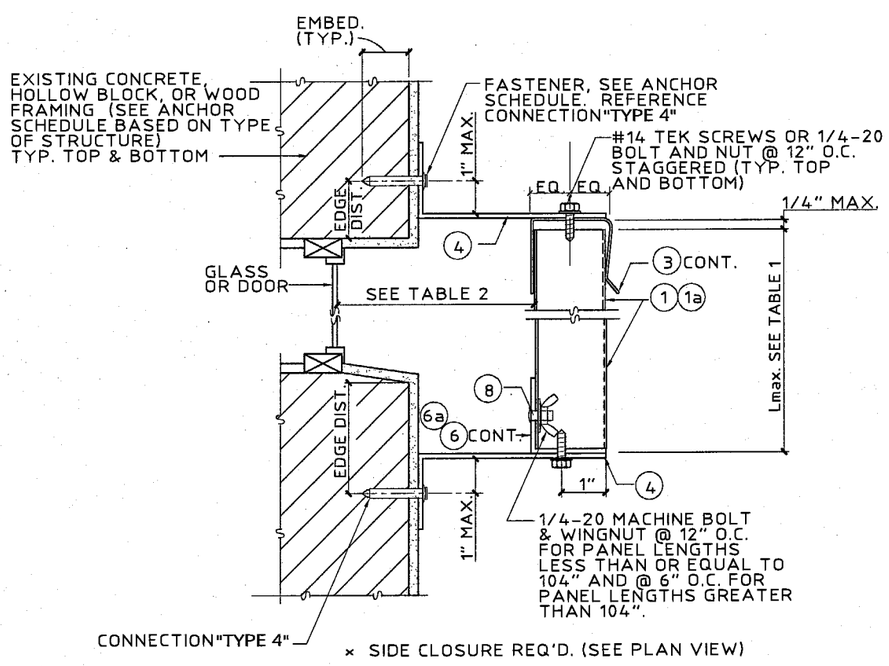

H BUILD-OUT MOUNT SECTION

SCALE : 3" = 1'-0"

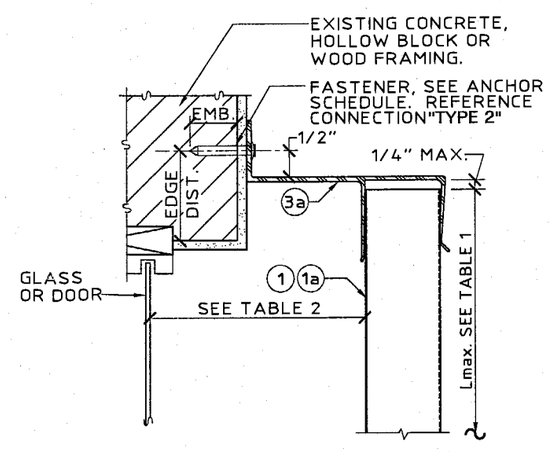

I BUILD-OUT MOUNT SECTION

SCALE: 3" = 1' - 0"

Approved as complying with the Florida Buiding Code
Date 03/21/2002
NOA# 01-0313.20
Miami Dade Product Control Division
By Helmy A. Mahr

KNEZEVICH & ASSOCIATES, INC.
CONSULTING ENGINEERS • PRODUCT TESTING
1260 N. UNIVERSITY DRIVE, SUITE 180 • FORT LAUDERDALE, FL 33322
TEL: (954) 382-2800 • FAX: (954) 382-2989 • FLORIDA COA #3205
WEBSITE: WWW.KNEZEVICH.COM • E-MAIL: KA@KNEZEVICH.COM

COPYRIGHT © 2001 KNEZEVICH & ASSOCIATES, INC.

0.050" ALUMINUM STORM PANELS

MADDEN Manufacturing
1994 N.W. 22nd Street
Pompano Beach, FL 33064
Phone (954) 415-2011
Fax (954) 960-0561
www.maddenmetal.com
STORM PANELS • RAINBOW PRODUCTS

revisions

no	date	by	description
0	03/06/01	VJK	PREV. DRAWING No. 96-110
1	01/17/02	WAS	ADD TESTING & BCCO COMMENTS
2	02/19/02	WAS	COUNTY COMMENTS

V.J. KNEZEVICH
PROFESSIONAL ENGINEER
FL License No: PE 0010983

FEB 19 2002

date 03/06/01	
scale AS NOTED	drawn by AV
design by VJK	checked by VJK
drawing no. 00-380	
sheet 3 of 10	

02/12/02 09:53

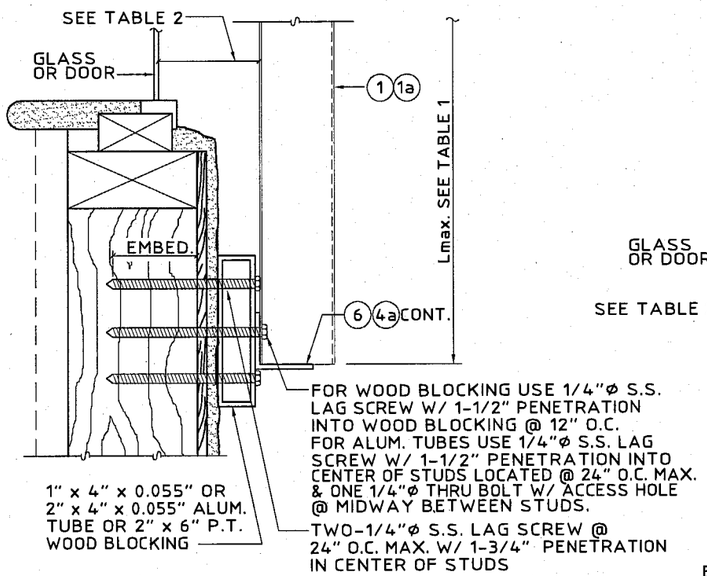

× THIS DETAIL MAY BE USED AT TOP OR BOTTOM OF PANELS.
NOTE: USE OF THIS DETAIL IS LIMITED TO ± 72 P.S.F.

(J) WALL MOUNT SECTION (BOTTOM)
SCALE : 3" = 1'-0"

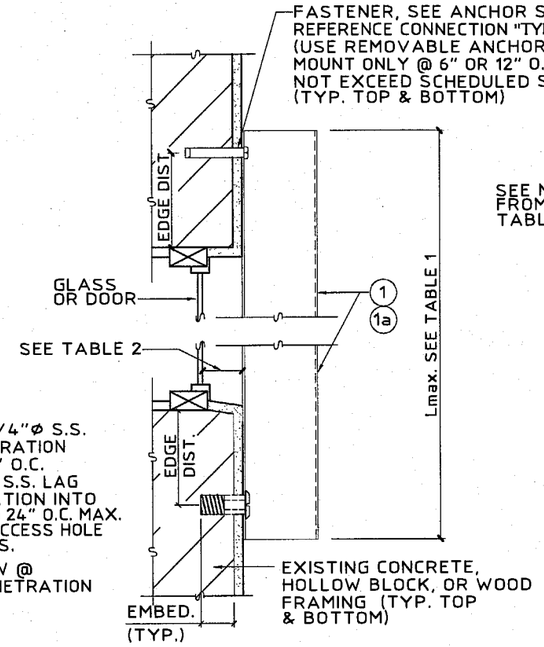

(K) WALL MOUNT SECTION (DIRECT MOUNT)
SCALE : 3" = 1'-0"

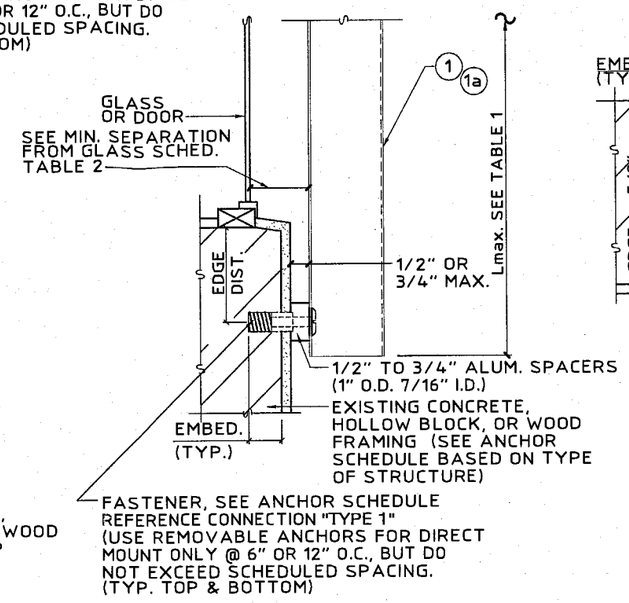

(TYP. TOP & BOTTOM)
(K1) WALL MOUNT SECTION (DIRECT MOUNT W/ SPACER)
SCALE : 3" = 1'-0"

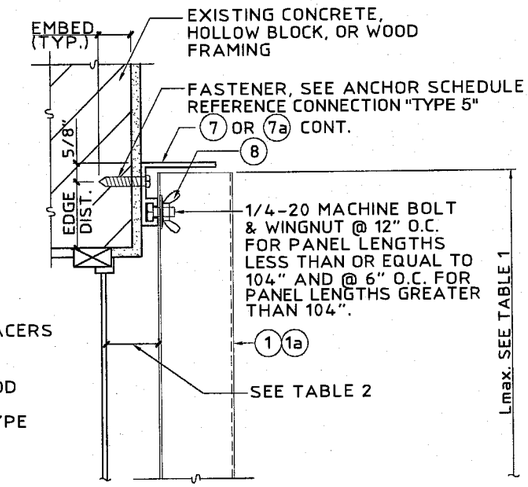

NOTE: THIS DETAIL MAY BE USED AT TOP OR BOTTOM OF PANELS.

(L) WALL MOUNT DETAIL
SCALE : 3" = 1'-0"

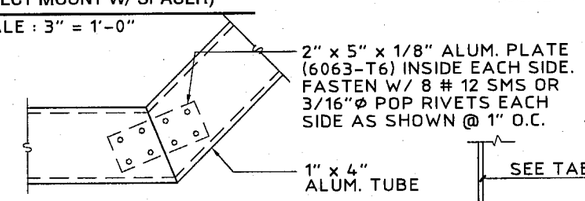

SPLICE DETAIL FOR BAY WINDOW APPLICATIONS
SCALE : 1-1/2" = 1'-0"

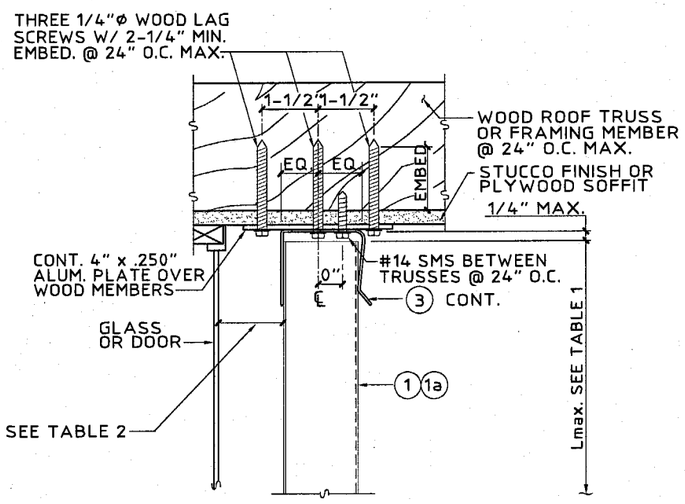

(N) SOFFIT CONNECTION DETAIL
SCALE : 3" = 1'-0"

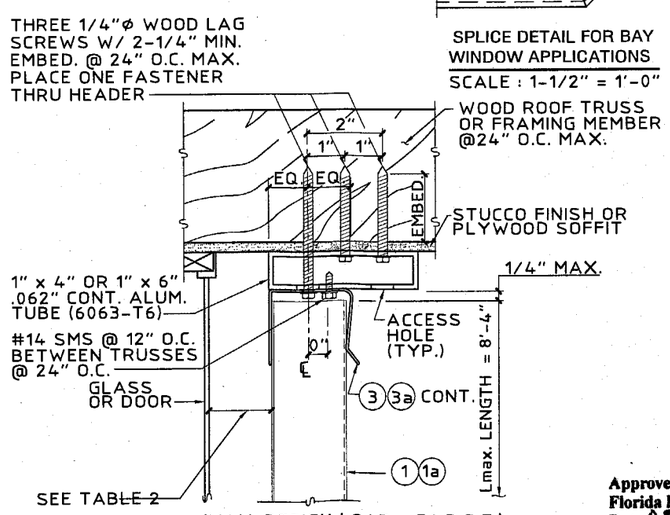

(MAX. DESIGN LOAD = 56 P.S.F.)

(O) ALT. SOFFIT CONNECTION DETAIL
SCALE : 3" = 1'-0"

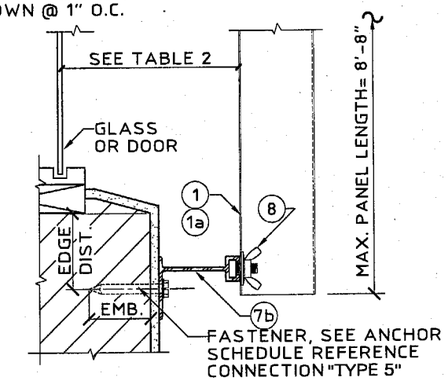

MAX. DESIGN LOAD= ±61.0 P.S.F.

(P) BUILD OUT SECTION (TYP. TOP & BOTTOM)
SCALE: 3" = 1' - 0"

Approved as complying with the Florida Buiding Code
Date 03/21/2002
NOA# 01-0313.20
Miami Dade Product Control Division
By Henry A. Mele

KNEZEVICH & ASSOCIATES, INC.
CONSULTING ENGINEERS • PRODUCT TESTING
1260 N. UNIVERSITY DRIVE, SUITE 180 • FORT LAUDERDALE, FL 33322
TEL: (954) 382-2800 • FAX: (954) 382-2989 • FLORIDA COA #3205
WEBSITE: WWW.KNEZEVICH.COM • E-MAIL: KA@KNEZEVICH.COM

COPYRIGHT © 2001 KNEZEVICH & ASSOCIATES, INC.

0.050" ALUMINUM STORM PANELS

MADDEN Manufacturing
1684 N.W. 22nd Street
Pompano Beach, FL 33064
Phone (954) 975-2011
Fax (954) 960-0561
www.maddenmetal.com
STORM PANELS • RAINBOW PRODUCTS

revisions

no	date	by	description
0	03/06/01	VJK	PREV. DRAWING No. 96-110
1	01/17/02	WAS	ADD TESTING & BCCO COMMENTS
2	02/19/02	WAS	COUNTY COMMENTS

V.J. KNEZEVICH
PROFESSIONAL ENGINEER
FL License No: PE 0010983
FEB 19 2002

date 03/06/01	
scale AS NOTED	drawn by AV
design by VJK	checked by VJK
drawing no. 00-380	
sheet 4 of 10	

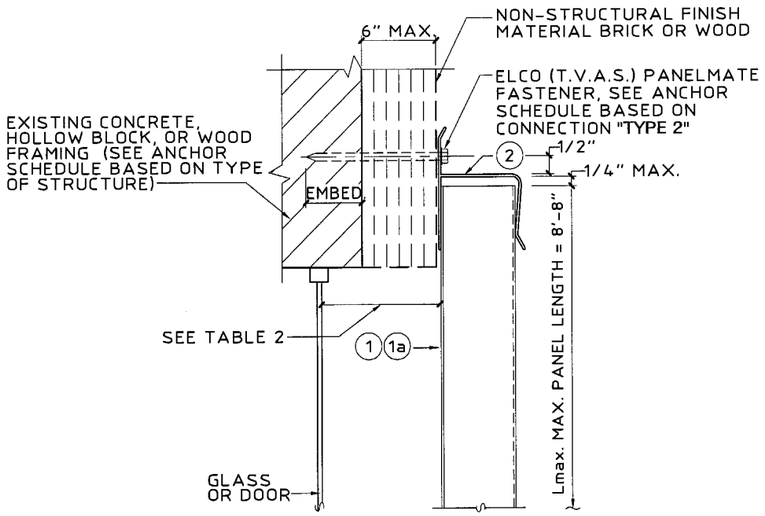

(MAX. DESIGN LOAD ± 61 P.S.F.)

Ⓡ WALL MOUNT
SCALE : 3" = 1'-0"

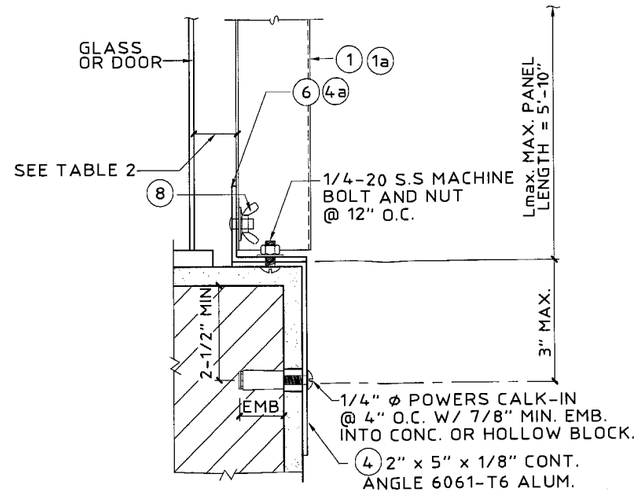

NOTES: THIS DETAIL MAY BE USED AT TOP OR BOTTOM OF PANEL.

(MAX. DESIGN LOAD ± 72 P.S.F.)

Ⓣ EDGE MOUNT DETAIL
SCALE : 3" = 1'-0"

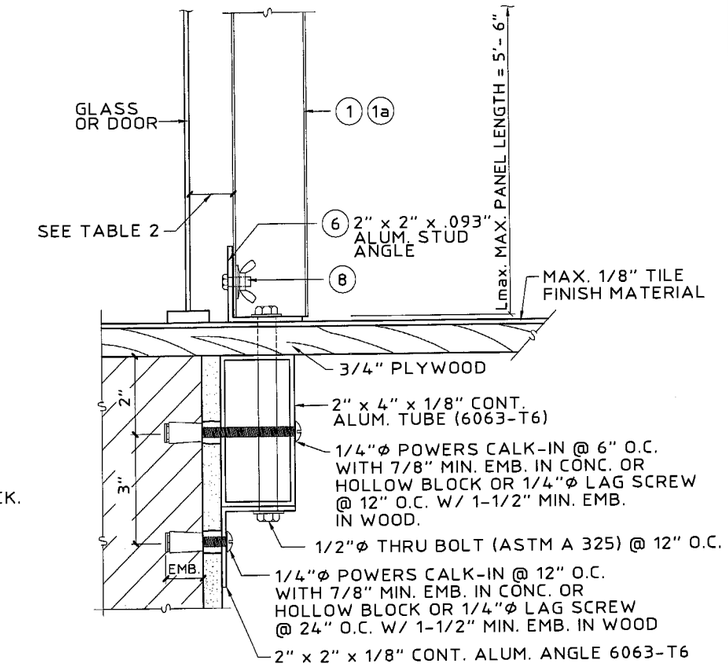

(MAX. DESIGN LOAD ± 72 P.S.F.)

Ⓤ "PASS THRU" DETAIL
SCALE : 3" = 1'-0"

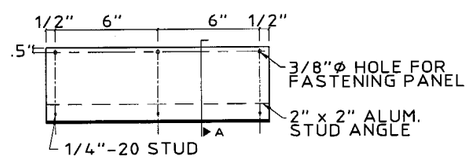

INTERIOR FASTENING ANGLE ASSEMBLY
SCALE: 1-1/2" = 1'-0"

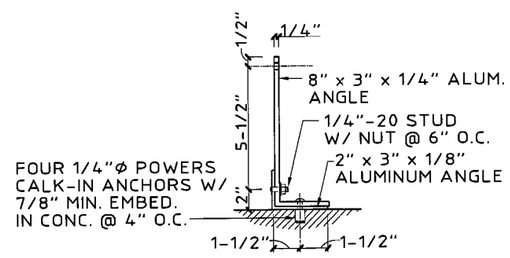

INTERIOR FASTENING ANGLE ASSEMBLY
SCALE: N.T.S.

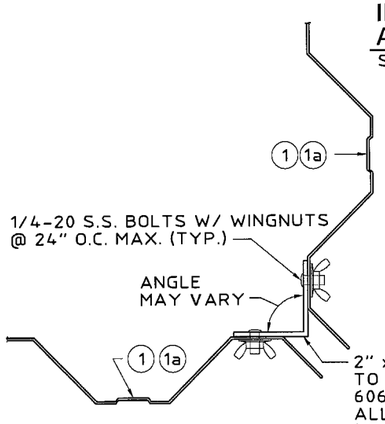

Ⓥ ALT. CORNER DETAIL
SCALE : 3" = 1'-0"

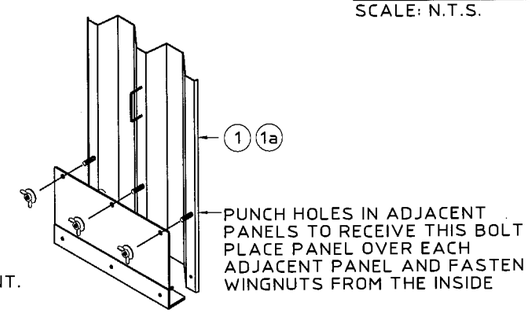

STORM PANEL INTERIOR FASTENING (ISOMETRIC)
SCALE: 3" = 1'-0"

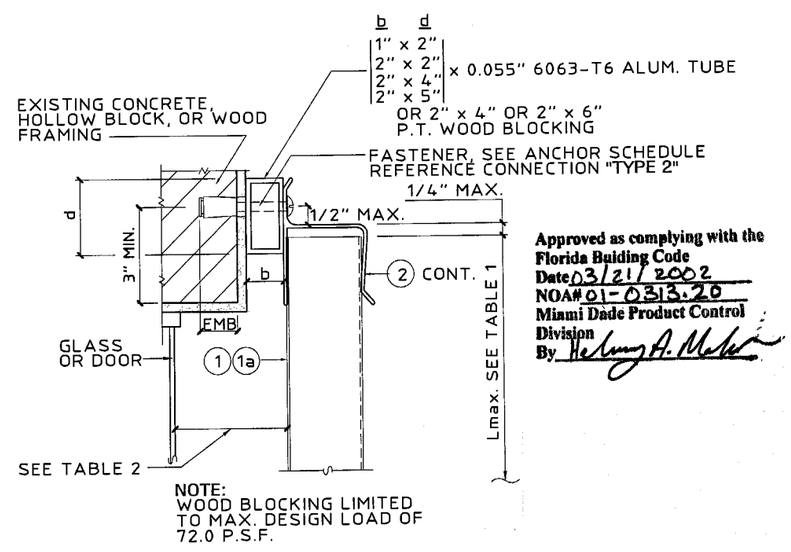

NOTE:
WOOD BLOCKING LIMITED TO MAX. DESIGN LOAD OF 72.0 P.S.F.

Ⓨ HEADER MOUNT DETAIL
SCALE : 3" = 1'-0"

Approved as complying with the Florida Buiding Code
Date 03/21/2002
NOA# 01-0313.20
Miami Dade Product Control Division
By

KNEZEVICH & ASSOCIATES, INC.
CONSULTING ENGINEERS • PRODUCT TESTING
1260 N. UNIVERSITY DRIVE, SUITE 180 • FORT LAUDERDALE, FL 33322
TEL: (954) 382-2800 • FAX: (954) 382-2989 • FLORIDA COA #3205
WEBSITE: WWW.KNEZEVICH.COM • E-MAIL: KA@KNEZEVICH.COM

COPYRIGHT © 2001 KNEZEVICH & ASSOCIATES, INC.

0.050" ALUMINUM STORM PANELS

MADDEN Manufacturing
STORM PANELS • RAINBOW PRODUCTS
1884 NW 22nd Street
Pompano Beach, FL 33064
Phone (954) 975-2071
Fax (954) 460-0561
www.maddenmetal.com

revisions

rev	date	by	description
0	03/06/01	VJK	PREV. DRAWING No. 96-110
1	01/17/02	WAS	ADD TESTING & BCCO COMMENTS
2	02/19/02	WAS	COUNTY COMMENTS

V.J. KNEZEVICH
PROFESSIONAL ENGINEER
FL License No: PE 0010983

FEB 19 2002

date 03/06/01	
scale AS NOTED	drawn by AV
design by VJK	checked by VJK
drawing no. 00-380	
sheet 5 of 10	

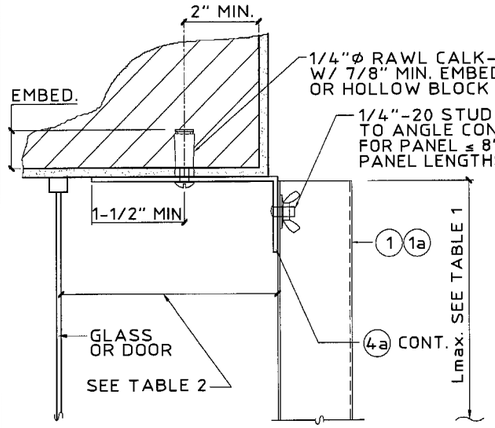

Z ALT. TRAP MOUNT DETAIL
SCALE : 3" = 1'-0"

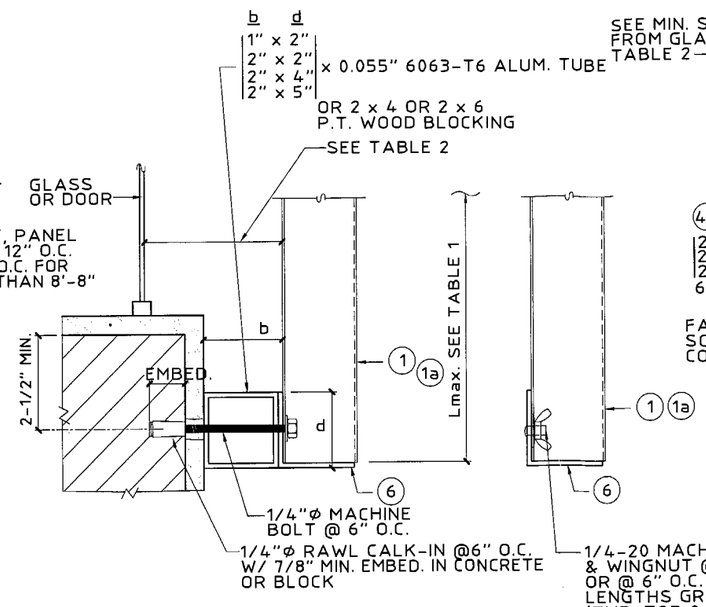

NOTE: 1. THIS DETAIL MAY BE USED AT TOP OR BOTTOM OF PANEL.
2. WOOD BLOCKING LIMITED TO MAX. DESIGN LOAD = 72.0 P.S.F.

AB ALUM. TUBE BUILD-OUT
SCALE : 3" = 1'-0"

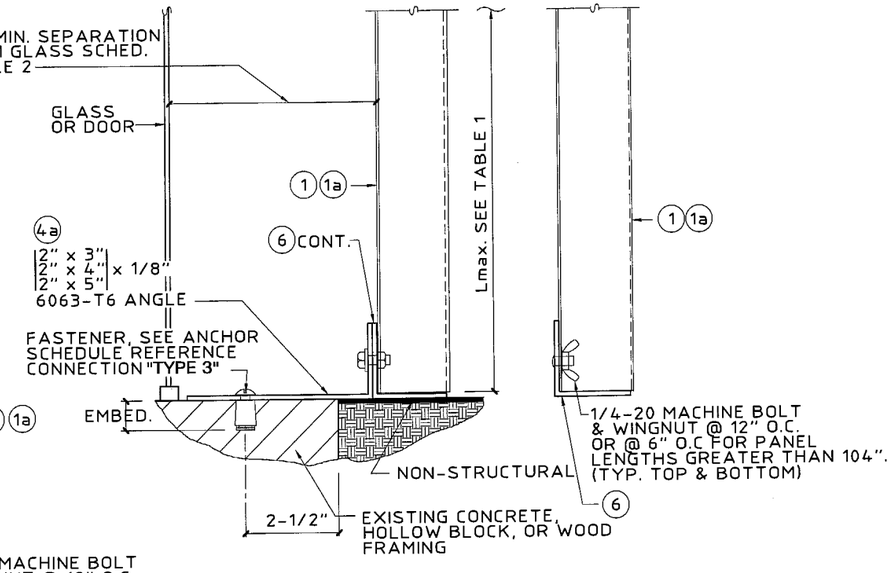

NOTE: THIS DETAIL MAY BE USED AT TOP OR BOTTOM OF PANEL.

AC STORM PANEL BUILD-OUT
SCALE : 3" = 1'-0"

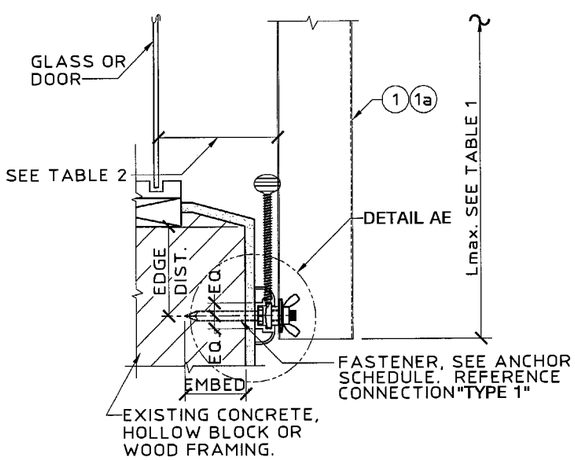

NOTE: USE OF DETAIL SHALL BE IN CONJUNCTION WITH AN " h " HEADER OR " U " HEADER TOP MOUNT

AD C-TRACK ASSEMBLY - INSIDE MOUNT
SCALE: 3" = 1' - 0"

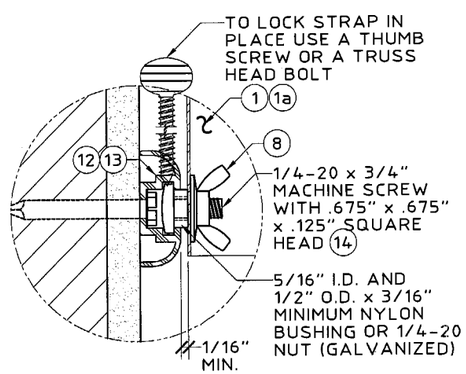

AE C-TRACK ASSEMBLY - (BLOW UP)
SCALE: HALF SIZE

Approved as complying with the Florida Buiding Code
Date 03/21/2002
NOA# 01-0313.20
Miami Dade Product Control Division
By Helmy A. Mek

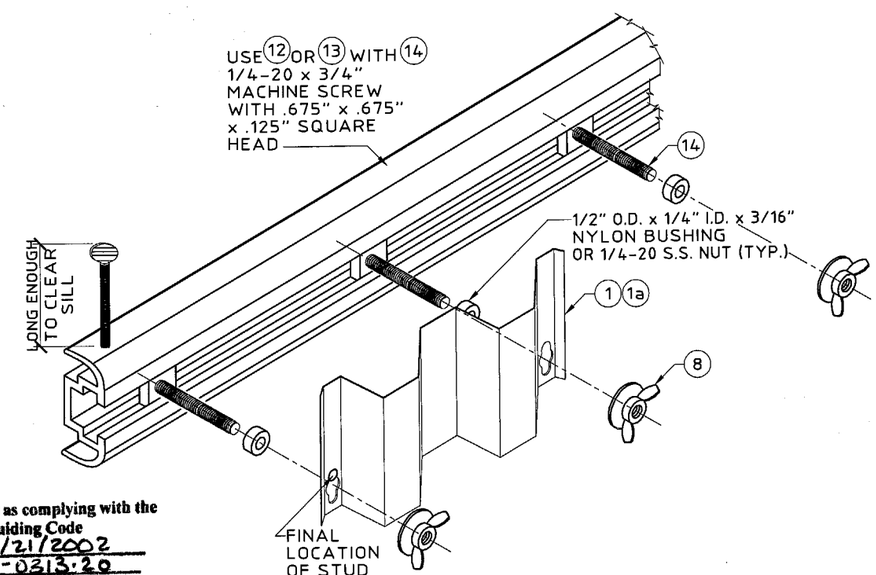

AF C-TRACK ASSEMBLY (ISOMETRIC VIEW)
N.T.S.

KNEZEVICH & ASSOCIATES, INC.
CONSULTING ENGINEERS • PRODUCT TESTING
1280 N. UNIVERSITY DRIVE, SUITE 180 • FORT LAUDERDALE, FL 33322
TEL: (954) 382-2800 • FAX: (954) 382-2989 • FLORIDA COA #3205
WEBSITE: WWW.KNEZEVICH.COM • E-MAIL: KA@KNEZEVICH.COM

COPYRIGHT © 2001 KNEZEVICH & ASSOCIATES, INC.

0.050" ALUMINUM STORM PANELS

MADDEN Manufacturing
STORM PANELS • RAINBOW PRODUCTS
1684 NW 22nd Street
Pompano Beach, FL 33064
Phone (954) 975-2071
Fax (954) 460-0567
www.maddenmetal.com

revisions

no	date	by	description
0	03/06/01	VJK	PREV. DRAWING No. 96-110
1	01/17/02	WAS	ADD TESTING & BCCO COMMENTS
2	02/19/02	WAS	COUNTY COMMENTS

V.J. KNEZEVICH
PROFESSIONAL ENGINEER
FL License No: PE 0010583

FEB 19 2002

date 03/06/01	
scale AS NOTED	drawn by AV
design by VJK	checked by VJK
drawing no. 00-380	
sheet 6 of 10	

ANCHOR SCHEDULE

FASTENER MAXIMUM SPACING (INCHES) REQUIRED FOR VARIOUS DESIGN LOADS AND SPANS

EXISTING STRUCTURE	ANCHOR TYPE	LOAD (W) PSF MAX. (SEE NOTE 1)	MIN. 2" EDGE DISTANCE														
			SPANS UP TO 5' - 6" (SEE NOTE 1)					SPANS UP TO 7' - 6" (SEE NOTE 1)					SPANS UP TO 10' - 6" (SEE NOTE 1)				
			CONNECTION TYPE					CONNECTION TYPE					CONNECTION TYPE				
			1	2	3	4	5	1	2	3	4	5	1	2	3	4	5
CONCRETE	1/4"ø ITW TAPCON OR 1/4"ø ELCO TAPCON W/ 1-3/4" MIN. EMBEDMENT (MIN. 3,000 P.S.I. CONCRETE)	48	12	12	12	12	12	12	12	12	12	11	12	9	10	12	8
		62	12	12	12	12	12	12	11	11	12	9	12	6	8	12	6
		67	12	12	12	12	11	12	9	10	12	8	12	6	8	12	6
		72	12	12	12	12	10	12	8	9	12	7	12	6	8	12	6
		92	12	9	10	12	8	12	6	8	12	6	12	6	8	12	6
		112	12	6	8	12	6	12	6	8	12	6	12	6	8	12	6
		200	12	6	8	12	6	12	6	8	12	6	12	6	8	12	6
	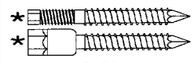 1/4"ø ELCO MALE/ FEMALE "PANELMATE" W/ 1-3/4 MIN. EMBEDMENT & 1/4-20 MACHINE SCREW WITH NUT (MIN. 3,000 P.S.I. CONCRETE)	48	12	12	11	12	7	12	11	8	12	5	12	4	6	12	4
		62	12	12	9	12	6	12	5	6	12	4	9		4	7	3
		67	12	10	8	12	5	12	4	6	12	4	9		4	7	3
		72	12	8	7	12	5	11	4	5	11	3	9		4	7	3
		92	12	4	6	12	4	9		4	7	3	9		4	7	3
		112	10	3	5	9	3	9		4	7	3	9		4	7	3
		200	9		4	7	3	9		4	7	3	9		4	7	3
	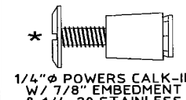 1/4"ø POWERS CALK-IN W/ 7/8" EMBEDMENT & 1/4-20 STAINLESS STEEL MACHINE SCREW (MIN. 3,000 P.S.I. CONCRETE)	48	12	12	12	12	12	12	12	12	12	12	12	10	9	12	8
		62	12	12	12	12	12	12	11	9	12	9	12	6	7	12	6
		67	12	12	12	12	11	12	10	9	12	8	12	6	7	12	6
		72	12	12	11	12	11	12	8	8	12	8	12	6	7	12	6
		92	12	9	9	12	8	12	6	7	12	6	12	6	7	12	6
		112	12	6	7	12	7	12	6	7	12	6	12	6	7	12	6
		200	12	6	7	12	6	12	6	7	12	6	12	6	7	12	6
	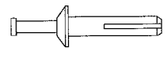 1/4"ø POWERS RAWL ZAMAC NAIL-IN W/ 1-1/8" MIN. EMBEDMENT (MIN. 3,000 P.S.I. CONCRETE)	48	12	12	12	12	8	12	12	10	12	5	12	4	7	12	4
		62	12	12	10	12	6	12	5	7	12	4	10	3	5	8	3
		67	12	11	9	12	5	12	4	7	12	4	10	3	5	8	3
		72	12	8	9	12	5	12	4	6	12	3	10	3	5	8	3
		92	12	4	7	12	4	10	3	5	8	3	10	3	5	8	3
		112	10	3	5	9	3	10	3	5	8	3	10	3	5	8	3
		200	10	3	5	8	3	10	3	5	8	3	10	3	5	8	3
	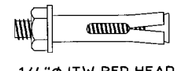 1/4"ø ITW RED HEAD DYNABOLT SLEEVE ANCHOR W/1-1/8" MIN. EMBED. (MIN. 3,000 P.S.I. CONCRETE)	48	12	12	12	12	12	12	12	11	12	9	12	7	7	12	6
		62	12	12	11	12	9	12	9	8	12	7	12	4	6	12	5
		67	12	12	10	12	9	12	7	7	12	6	12	4	6	12	5
		72	12	12	10	12	8	12	6	7	12	6	12	4	6	12	5
		92	12	7	7	12	6	12	4	6	12	5	12	4	6	12	5
		112	12	5	6	12	5	12	4	6	12	5	12	4	6	12	5
		200	12	4	6	12	5	12	4	6	12	5	12	4	6	12	5
	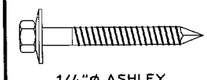 1/4"ø ASHLEY QUICK-SET SCREW WITH 1-1/4" MIN. EMBEDMENT (MIN. 3,000 P.S.I. CONCRETE)	48	12	12	12	12	7	12	11	10	12	5	12	4	7	12	4
		62	12	12	10	12	6	12	5	7	12	4	9		5	7	3
		67	12	10	9	12	5	12	4	7	12	4	9		5	7	3
		72	12	8	9	12	5	11	4	6	11	3	9		5	7	3
		92	12	4	7	12	4	9		5	7	3	9		5	7	3
		112	10	3	5	9	3	9		5	7	3	9		5	7	3
		200	9		5	7	3	9		5	7	3	9		5	7	3
	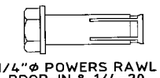 1/4"ø POWERS RAWL DROP-IN & 1/4-20 SIDEWALK BOLT (3/4"ø HEAD) W/ 1-1/4" MIN. EMBEDMENT (MIN. 3,000 P.S.I. CONCRETE)	48	12	12	12	12	12	12	12	12	12	12	12	12	9	12	11
		62	12	12	12	12	12	12	12	10	12	11	12	7	7	12	8
		67	12	12	12	12	12	12	12	10	12	11	12	7	7	12	8
		72	12	12	12	12	12	12	11	9	12	10	12	7	7	12	8
		92	12	12	9	12	10	12	7	7	12	8	12	7	7	12	8
		112	12	8	8	12	9	12	7	7	12	8	12	7	7	12	8
		200	12	7	7	12	8	12	7	7	12	8	12	7	7	12	8

ANCHOR NOTES:

1. SEE SHEET 9 OF 10 FOR COMPLETE ANCHOR NOTES.

Approved as complying with the Florida Building Code
Date 03/21/2002
NOA#01-0313.20
Miami Dade Product Control Division
By

02/20/02 10:54

V.J. KNEZEVICH
PROFESSIONAL ENGINEER
FL. License No: PE-0010983

FEB 19 2002

date	03/06/01
scale	AS NOTED
drawn by	AV
design by	VJK
checked by	VJK
drawing no.	00-380
sheet 7 of 10	

revisions

no	date	by	description
0	03/06/01	VJK	PREV. DRAWING No. 96-110
1	01/17/02	WAS	ADD TESTING & BCCO COMMENTS
2	02/19/02	WAS	COUNTY COMMENTS

0.050" ALUMINUM STORM PANELS

MADDEN Manufacturing
STORM PANELS • RAINBOW PRODUCTS
1889 NW 22nd Street
Pompano Beach, FL 33069
Phone (954) 975-2011
Fax (954) 960-0567
www.maddenmetal.com

KNEZEVICH & ASSOCIATES, INC.
CONSULTING ENGINEERS • PRODUCT TESTING
1260 N. UNIVERSITY DRIVE, SUITE 180 • FORT LAUDERDALE, FL 33322
TEL: (954) 382-2800 • FAX: (954) 382-2989 • FLORIDA COA #3205
WEBSITE: WWW.KNEZEVICH.COM • E-MAIL: KA@KNEZEVICH.COM

COPYRIGHT © 2001 KNEZEVICH & ASSOCIATES, INC.

ANCHOR SCHEDULE

FASTENER MAXIMUM SPACING (INCHES) REQUIRED FOR VARIOUS DESIGN LOADS AND SPANS

EXISTING STRUCTURE	ANCHOR TYPE	LOAD (W) PSF MAX. (SEE NOTE 1)	MIN. 2" EDGE DISTANCE														
			SPANS UP TO 5' - 6" (SEE NOTE 1)					SPANS UP TO 7' - 6" (SEE NOTE 1)					SPANS UP TO 10' - 6" (SEE NOTE 1)				
			CONNECTION TYPE					CONNECTION TYPE					CONNECTION TYPE				
			1	2	3	4	5	1	2	3	4	5	1	2	3	4	5
HOLLOW CONCRETE BLOCK	1/4"Ø ITW TAPCON OR 1/4"Ø ELCO TAPCON W/ 1-1/4" MIN. EMBEDMENT	48	12	12	9	12	5	12	8	7	12	3	8	3	5	8	
		62	12	10	7	12	4	9	3	5	9	3	6		3	5	
		67	11	7	6	11	3	8	3	5	8		6		3	5	
		72	11	5	6	11	3	8		4	8		6		3	5	
		92	8	3	5	8		6		3	5		6		3	5	
		112	7		4	6		6		3	5		6		3	5	
		200	6		3	5		6		3	5		6		3	5	
	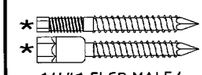 * * 1/4"Ø ELCO MALE/ FEMALE "PANELMATE" W/ 1-1/4 MIN. EMBEDMENT & 1/4-20 MACHINE SCREW WITH NUT	48	12	12	12	12	8	12	12	10	12	6	12	5	7	12	4
		62	12	12	10	12	6	12	6	7	12	4	10	3	5	8	3
		67	12	11	9	12	5	12	5	7	12	4	10	3	5	8	3
		72	12	9	9	12	5	12	4	6	12	4	10	3	5	8	3
		92	12	4	7	12	4	10	3	5	8	3	10	3	5	8	3
		112	10	3	5	10	3	10	3	5	8	3	10	3	5	8	3
		200	10	3	5	8	3	10	3	5	8	3	10	3	5	8	3
	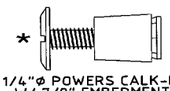 * 1/4"Ø POWERS CALK-IN W/ 7/8" EMBEDMENT & 1/4-20 STAINLESS STEEL MACHINE SCREW	48	12	12	10	12	6	12	10	7	12	5	11	4	5	11	3
		62	12	12	8	12	5	12	5	5	12	3	8		4	6	
		67	12	9	7	12	4	11	4	5	11	3	8		4	6	
		72	12	7	6	12	4	10	3	5	10	3	8		4	6	
		92	11	4	5	11	3	8		4	6		8		4	6	
		112	9		4	8		8		4	6		8		4	6	
		200	8		4	6		8		4	6		8		4	6	
	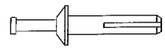 1/4"Ø POWERS RAWL ZAMAC NAIL-IN W/ 1-1/8" MIN. EMBEDMENT	48	12	12	10	12	5	11	7	7	11	3	8	3	5	8	
		62	12	9	7	12	4	9	3	5	9		6		4	5	
		67	11	7	7	11	3	8	3	5	8		6		4	5	
		72	10	5	6	10	3	7		4	7		6		4	5	
		92	8	3	5	8		6		4	5		6		4	5	
		112	6		4	6		6		4	5		6		4	5	
		200	6		4	5		6		4	5		6		4	5	
	1/4"Ø ITW RED HEAD DYNABOLT SLEEVE ANCHOR W/1-1/8" MIN. EMBED.	48	12	12	8	12	6	12	10	6	12	4	10	4	4	10	3
		62	12	12	6	12	5	11	4	4	11	3	8		3	6	
		67	12	9	6	12	4	10	4	4	10	3	8		3	6	
		72	12	7	5	12	4	9	3	4	9	3	8		3	6	
		92	10	3	4	10	3	8		3	6		8		3	6	
		112	8		3	7		8		3	6		8		3	6	
		200	8		3	6		8		3	6		8		3	6	
	1/4"Ø ASHLEY QUICK-SET SCREW WITH 1-1/4" MIN. EMBEDMENT	48	12	12	12	12	7	12	11	10	12	5	12	4	7	12	4
		62	12	12	10	12	6	12	5	7	12	4	9		5	7	3
		67	12	10	9	12	5	12	4	7	12	4	9		5	7	3
		72	12	8	9	12	5	11	4	6	11	3	9		5	7	3
		92	12	4	7	12	4	9		5	7	3	9		5	7	3
		112	10	3	5	9	3	9		5	7	3	9		5	7	3
		200	9		5	7	3	9		5	7	3	9		5	7	3

ANCHOR NOTES:

1. SEE SHEET 9 OF 10 FOR COMPLETE ANCHOR NOTES.

Approved as complying with the Florida Building Code Date 03/21/2002 NOA# 01-0315.20 Miami Dade Product Control Division By

V.J. KNEZEVICH PROFESSIONAL ENGINEER FL License No: PE 0070983

FEB 19 2002

date	03/06/01
scale	AS NOTED
drawn by	AV
design by	V.J.K.
checked by	V.J.K.
drawing no	00-380
sheet 8 of 10	

revisions

no	date	by	description
0	03/06/01	VJK	PREV. DRAWING No. 95-110
1	01/17/02	WAS	ADD TESTING & BCCO COMMENTS
2	02/19/02	WAS	COUNTY COMMENTS

0.050" ALUMINUM STORM PANELS

MADDEN Manufacturing
STORM PANELS • RAINBOW PRODUCTS
1889 N.W. 22nd Street
Pompano Beach, FL 33069
Phone (954) 975-2011
Fax (954) 960-0567
www.maddenmetal.com

KNEZEVICH & ASSOCIATES, INC.
CONSULTING ENGINEERS • PRODUCT TESTING
1260 N. UNIVERSITY DRIVE, SUITE 180 • FORT LAUDERDALE, FL 33322
TEL: (954) 382-2800 • FAX: (954) 382-2989 • FLORIDA COA #3205
WEBSITE: WWW.KNEZEVICH.COM • E-MAIL: KA@KNEZEVICH.COM

COPYRIGHT © 2001 KNEZEVICH & ASSOCIATES, INC.

02/20/02 10:56

ANCHOR SCHEDULE

FASTENER MAX. SPACING (IN.) REQ'D FOR VARIOUS DESIGN LOADS AND SPANS

EXISTING STRUCTURE	ANCHOR TYPE	LOAD (W) PSF MAX. (SEE NOTE 1)	MIN. 3/4" EDGE DISTANCE														
			SPANS UP TO 5' - 6" (SEE NOTE 1)					SPANS UP TO 7' - 6" (SEE NOTE 1)					SPANS UP TO 10' - 6" (SEE NOTE 1)				
			CONNECTION TYPE					CONNECTION TYPE					CONNECTION TYPE				
			1	2	3	4	5	1	2	3	4	5	1	2	3	4	5
WOOD	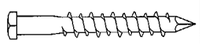 1/4"ϕ x MIN. 3" LONG LAG SCREW W/ MIN. 2" EMBEDMENT SHEAR PARALLEL OR PERPENDICULAR TO WOOD GRAIN	48	12	12	12	12	12	12	12	10	12	11	12	9	7	12	8
		62	12	12	11	12	12	12	11	8	12	9	12	6	6	12	6
		67	12	12	10	12	11	12	9	7	12	8	12	6	6	12	6
		72	12	12	9	12	10	12	8	7	12	7	12	6	6	12	6
		92	12	9	7	12	8	12	6	6	12	6	12	6	6	12	6
		112	12	6	6	12	6	12	6	6	12	6	12	6	6	12	6
		200	12	6	6	12	6	12	6	6	12	6	12	6	6	12	6
	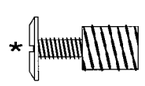 7/16"ϕ WOOD BUSHING W/ 5/8" MIN. EMBEDMENT & 1/4-20 STAINLESS STEEL MACHINE SCREW	48	12	12	11	12	12	12	12	8	12	11	12	9	6	12	8
		62	12	12	9	12	12	12	11	6	12	9	12	6	4	12	6
		67	12	12	8	12	11	12	9	6	12	8	12	6	4	12	6
		72	12	12	7	12	10	12	8	5	12	7	12	6	4	12	6
		92	12	9	6	12	8	12	6	4	12	6	12	6	4	12	6
		112	12	6	5	12	6	12	6	4	12	6	12	6	4	12	6
		200	12	6	4	12	6	12	6	4	12	6	12	6	4	12	6
	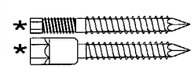 1/4"ϕ ELCO MALE/ FEMALE "PANELMATE" W/ 1-7/8" MIN. EMBEDMENT & 1/4-20 MACHINE SCREW WITH NUT	48	12	12	12	12	12	12	12	12	12	12	12	10	10	12	9
		62	12	12	12	12	12	12	12	11	12	10	12	6	8	12	7
		67	12	12	12	12	12	12	11	10	12	9	12	6	8	12	7
		72	12	12	12	12	12	12	9	10	12	8	12	6	8	12	7
		92	12	10	10	12	9	12	6	8	12	7	12	6	8	12	7
		112	12	7	8	12	7	12	6	8	12	7	12	6	8	12	7
		200	12	6	8	12	7	12	6	8	12	7	12	6	8	12	7

ANCHOR NOTES:

1. SPANS AND LOADS SHOWN HERE ARE FOR DETERMINING ANCHOR SPACING ONLY. ALLOWABLE STORM PANEL SPANS FOR SPECIFIC LOADS MUST BE LIMITED TO THOSE SHOWN IN TABLE 1.
2. ENTER ANCHOR SCHEDULE BASED ON THE EXISTING STRUCTURE MATERIAL, ANCHOR TYPE AND EDGE DISTANCE. SELECT DESIGN LOAD GREATER THAN OR EQUAL TO NEGATIVE DESIGN LOAD ON SHUTTER AND SELECT SPAN GREATER THAN OR EQUAL TO SHUTTER SPAN.
3. ANCHORS SHALL BE INSTALLED IN ACCORDANCE WITH MANUFACTURERS' RECOMMENDATIONS.
4. MINIMUM EMBEDMENT AND EDGE DISTANCE EXCLUDES WALL FINISH OR STUCCO.
5. FIELD VERIFY THAT FASTENERS ARE INTO ADEQUATE WOOD FRAMING MEMBERS, NOT PLYWOOD.
6. WHERE LAG SCREWS FASTEN TO NARROW FACE OF STUD FRAMING, FASTENER SHALL BE LOCATED IN CENTER OF NOMINAL 2" x 4" (MIN.) WOOD STUD. 3/4" EDGE DISTANCE IS ACCEPTABLE FOR WOOD FRAMING. WOOD STUD SHALL BE "SOUTHERN PINE" G=0.55 OR GREATER DENSITY. LAG SCREWS SHALL HAVE PHILLIPS PAN HEAD OR HEX HEAD.
7. MACHINE SCREWS SHALL HAVE MINIMUM OF 1/2" ENGAGEMENT OF THREADS IN BASE ANCHOR AND MAY HAVE EITHER A PAN HEAD, TRUSS HEAD, OR WAFER HEAD (SIDEWALK BOLT), U.O.N.
8. ▨ DESIGNATES ANCHOR CONDITIONS WHICH ARE NOT ACCEPTABLE USES.

★9. DESIGNATES ANCHORS WHICH ARE REMOVABLE BY REMOVING MACHINE SCREW, NUT OR WASHERED WINGNUT. REMOVABLE ANCHORS ARE REQUIRED FOR DIRECT MOUNT @ 6" O.C. OR 12" O.C. MAX. SPACING ONLY. SPACINGS SHALL NOT EXCEED VALUE SPECIFIED IN ANCHOR SCHEDULE. LOCATE FASTENER IN NARROW PORTION OF KEYHOLE SLOT OR KEYHOLE WASHER.

★10. 1/4-20 TRUSS HEAD BOLTS MAY BE USED IN LIEU OF 1/4-20 SIDEWALK BOLT IF ⑩ KEYHOLE WASHERS ARE USED.

Approved as complying with the Florida Building Code
Date 03/21/2002
NOA# 01-0313.20
Miami Dade Product Control Division
By Helmy A. Maher

KNEZEVICH & ASSOCIATES, INC.
CONSULTING ENGINEERS • PRODUCT TESTING
1260 N. UNIVERSITY DRIVE, SUITE 180 • FORT LAUDERDALE, FL 33322
TEL: (954) 382-2800 • FAX: (954) 382-2989 • FLORIDA COA #3205
WEBSITE: WWW.KNEZEVICH.COM • E-MAIL: KA@KNEZEVICH.COM

COPYRIGHT © 2001 KNEZEVICH & ASSOCIATES, INC.

0.050" ALUMINUM STORM PANELS

MADDEN Manufacturing
1864 NW 22nd Street
Pompano Beach, FL 33064
Phone (954) 975-2071
Fax (954) 960-0561
www.maddenmetal.com
STORM PANELS • RAINBOW PRODUCTS

revisions

no	date	by	description
0	03/06/01	VJK	PREV. DRAWING No. 96-110
1	01/17/02	MAS	ADD TESTING & BCCO COMMENTS
1	02/19/02	MAS	COUNTY COMMENTS
2			

V.J. KNEZEVICH
PROFESSIONAL ENGINEER
FL License No: PE 0010983

FEB 19 2002

date 03/06/01	
scale AS NOTED	drawn by AV
design by VJK	checked by VJK
drawing no. 00-380	
sheet 9 of 10	

TABLE 1

ALUMINUM STORM PANEL SPAN SCHEDULE

NEGATIVE DESIGN LOAD W (PSF)	FOR ALL MOUNTING CONDITIONS L MAX. (FT-IN)
30.0	10 - 6
35.0	10 - 4
40.0	10 - 0
45.0	9 - 8
50.0	9 - 5
55.0	9 - 2
60.0	8 - 9
62.0	8 - 7
65.0	8 - 5
67.0	8 - 2
70.0	7 - 10
72.0	7 - 7
75.0	7 - 3
80.0	6 - 10
90.0	6 - 1
100.0	5 - 6
110.0	5 - 0
112.0	4 - 10
120.0	4 - 7
130.0	4 - 2
140.0	3 - 11
150.0	3 - 8
160.0	3 - 5
170.0	3 - 2
180.0	3 - 0
190.0	2 - 10
200.0	2 - 9

TABLE 2

ALUMINUM STORM PANEL MIN. SEPARATION FROM GLASS SCHEDULE

POSITIVE DESIGN LOAD(W) (PSF)	ACTUAL SHUTTER SPAN (FT - IN)	MINIMUM SEPARATION FOR INSTALLATIONS 30' OR LESS ABOVE GRADE (INCHES)		MINIMUM SEPARATION FOR INSTALLATIONS GREATER THAN 30' ABOVE GRADE (INCHES)
		BAR	NO BAR	NO BAR
30.0	3 - 0	2	3	1-1/8
	4 - 0	2	3	1-1/4
	5 - 0	2	3	1-1/4
	7 - 0	2	3	1-1/2
	8 - 8	2-1/8	3	2-1/8
	10 - 6	3-3/4	3-3/4	3-3/8
40.0	3 - 0	2	3	1-1/8
	4 - 0	2	3	1-1/4
	5 - 0	2	3	1-3/8
	7 - 0	2	3	1-5/8
	8 - 8	2-1/2	3	2-1/2
	10 - 0	3-3/4	3-3/4	3-1/2
50.0	3 - 0	2	3	1-1/8
	4 - 0	2	3	1-1/4
	5 - 0	2	3	1-3/8
	7 - 0	2	3	1-3/4
	8 - 8	2-3/4	3	2-3/4
	9 - 5	3-3/4	3-3/4	3-5/8
60.0	3 - 0	2	3	1-1/8
	4 - 0	2	3	1-1/4
	5 - 0	2	3	1-3/8
	7 - 0	2	3	1-7/8
	8 - 8	3	3	3
	9 - 0	3-3/4	3-3/4	3-1/4
70.0	3 - 0	2	3	1-1/8
	4 - 0	2	3	1-1/4
	5 - 0	2	3	1-3/8
	6 - 0	2	3	1-7/8
	7 - 0	3	3	3
	8 - 8	3-3/4	3-3/4	3

NOTES:

1. ENTER TABLE 1 WITH NEGATIVE DESIGN LOAD TO DETERMINE STORM PANEL SPAN. (Lmax.). POSITIVE LOADS LESS THAN OR EQUAL TO THE NEGATIVE LOAD ARE ACCEPTABLE.
2. ENTER TABLE 2 WITH POSITIVE DESIGN LOAD TO DETERMINE MIN. SEPARATION FROM GLASS.
3. FOR DESIGN LOADS BETWEEN TABULATED VALUES, USE NEXT HIGHER LOAD OR LINEAR INTERPOLATION MAY BE USED TO DETERMINE ALLOWABLE SPANS.
4. ABOVE SCHEDULES 1 & 2 ARE FOR USE WITH .050" ALUMINUM STORM PANELS ONLY.

Approved as complying with the Florida Buiding Code
Date 03/21/2002
NOA# 01-0312.20
Miami Dade Product Control Division
By Helmy A. Mahfouz

KNEZEVICH & ASSOCIATES, INC.
CONSULTING ENGINEERS • PRODUCT TESTING
1260 N. UNIVERSITY DRIVE, SUITE 180 • FORT LAUDERDALE, FL 33322
TEL: (954) 382-2800 • FAX: (954) 382-2989 • FLORIDA COA #3205
WEBSITE: WWW.KNEZEVICH.COM • E-MAIL: KA@KNEZEVICH.COM
COPYRIGHT © 2001 KNEZEVICH & ASSOCIATES, INC.

0.050" ALUMINUM STORM PANELS

MADDEN Manufacturing
STORM PANELS • RAINBOW PRODUCTS
1884 NW 22nd Street
Pompano Beach, FL 33064
Phone (954) 975-2071
Fax (954) 460-0567
www.maddenmfg.com

revisions

no	date	by	description
0	03/06/01	VJK	PREV. DRAWING No. 96-110
1	01/17/02	WAS	ADD TESTING & BCCO COMMENTS
2	02/19/02	WAS	COUNTY COMMENTS

V.J. KNEZEVICH
PROFESSIONAL ENGINEER
FL License No: PE 0010983

FEB 19 2002

date 03/06/01
scale AS NOTED
drawn by AV
design by VJK
checked by VJK
drawing no. 00-380
sheet 10 of 10