MIAMI-DADE COUNTY, FLORIDA
METRO-DADE FLAGLER BUILDING

BUILDING CODE COMPLIANCE OFFICE
METRO-DADE FLAGLER BUILDING
140 WEST FLAGLER STREET, SUITE 1603
MIAMI, FLORIDA 33130-1563
(305) 375-2901 FAX (305) 375-2908

CONTRACTOR LICENSING SECTION
(305) 375-2527 FAX (305) 375-2558

CONTRACTOR ENFORCEMENT DIVISION
(305) 375-2966 FAX (305) 375-2908

PRODUCT CONTROL DIVISION
(305) 375-2902 FAX (305) 372-6339

PRODUCT CONTROL NOTICE OF ACCEPTANCE

Premdor Entry Systems
911 E. Jeferson, P.O. Box 76
Pittsburgh ,KS 66762

Your application for Notice of Acceptance (NOA) of:
Entergy 6-8 S-W/E Inswing Opaque Single w/sidelites Residential Insulated Steel Door
under Chapter 8 of the Code of Miami-Dade County governing the use of Alternate Materials and Types of Construction, and completely described herein, has been recommended for acceptance by the Miami-Dade County Building Code Compliance Office (BCCO) under the conditions specified herein.

This NOA shall not be valid after the expiration date stated below. BCCO reserves the right to secure this product or material at any time from a jobsite or manufacturer's plant for quality control testing. If this product or material fails to perform in the approved manner, BCCO may revoke, modify, or suspend the use of such product or material immediately. BCCO reserves the right to revoke this approval, if it is determined by BCCO that this product or material fails to meet the requirements of the South Florida Building Code.

The expense of such testing will be incurred by the manufacturer.

ACCEPTANCE NO.: 01-0314.16
EXPIRES: 04/02/2006

Raul Rodriguez
Chief Product Control Division

THIS IS THE COVERSHEET, SEE ADDITIONAL PAGES FOR SPECIFIC AND GENERAL CONDITIONS
BUILDING CODE & PRODUCT REVIEW COMMITTEE

This application for Product Approval has been reviewed by the BCCO and approved by the Building Code and Product Review Committee to be used in Miami-Dade County, Florida under the conditions set forth above.

Francisco J. Quintana, R.A.
Director
Miami-Dade County
Building Code Compliance Office

APPROVED: 06/05/2001

\\s0450001\pc2000\\templates\notice acceptance cover page.dot

Premdor Entry Systems

ACCEPTANCE No.: 01-0314.16

APPROVED : JUN 05 2001

EXPIRES : April 02, 2006

NOTICE OF ACCEPTANCE: SPECIFIC CONDITIONS

1. SCOPE

1.1 This **renews** the Notice of Acceptance No. 00-0321.18 which was issued on April 28, 2000. It approves a residential insulated door, as described in Section 2 of this Notice of Acceptance, designed to comply with the South Florida Building Code (SFBC), 1994 Edition for Miami-Dade County, for the locations where the pressure requirements, as determined by SFBC Chapter 23, do not exceed the Design Pressure Rating values indicated in the approved drawings.

2. PRODUCT DESCRIPTION

2.1 The **Series Entergy 6-8 S-W/E Inswing Opaque Single Residential Insulated Steel Door with Sidelites – Impact Resistant Door Slab Only** and its components shall be constructed in strict compliance with the following documents: Drawing No **31-1020-EM-I**, Sheets 1 through 6 of 6, titled "Premdor (Entergy Brand) Steel Edge Single Door with Sidelites in a Wood Frames with a Bumper Threshold (Inswing)," prepared by manufacturer, dated 7/29/97 with revision C dated 01/15/00, bearing the Miami-Dade County Product Control approval stamp with the Notice of Acceptance number and approval date by the Miami-Dade County Product Control Division. These documents shall hereinafter be referred to as the approved drawings.

3. LIMITATIONS

3.1 This approval applies to single unit applications of single door only, as shown in approved drawings.

3.2 Unit shall be installed only at locations protected by a canopy or overhang such that the angle between the edge of canopy or overhang to sill is less than 45 degrees. Unless unit is installed in non-habitable areas where the unit and the area are designed to accept water infiltration

4. INSTALLATION

4.1 The residential insulated steel door and its components shall be installed in strict compliance with the approved drawings.

4.2 Hurricane protection system (shutters):

4.2.1 Door: the installation of this unit **will not require** a hurricane protection system.

4.2.2 Sidelite: the installation of this unit **will require** a hurricane protection system.

5. LABELING

5.1 Each unit shall bear a permanent label with the manufacturer's name or logo, city, state and following statement: "Miami-Dade County Product Control Approved".

6. BUILDING PERMIT REQUIREMENTS

6.1 Application for building permit shall be accompanied by copies of the following:

6.1.1 This Notice of Acceptance

6.1.2 Duplicate copies of the approved drawings, as identified in Section 2 of this Notice of Acceptance, clearly marked to show the components selected for the proposed installation.

6.1.3 Any other documents required by the Building Official or the South Florida Building Code (SFBC) in order to properly evaluate the installation of this system.

Manuel Perez

Manuel Perez, P.E. Product Control Examiner
Product Control Division

Premdor Entry Systems

ACCEPTANCE No.: 01-0314.16

APPROVED : JUN 05 2001

EXPIRES : April 02, 2006

NOTICE OF ACCEPTANCE: STANDARD CONDITIONS

1. Renewal of this Acceptance (approval) shall be considered after a renewal application has been filed and the original submitted documentation, including test supporting data, engineering documents, are no older than eight (8) years.

2. Any and all approved products shall be permanently labeled with the manufacturer's name, city, state, and the following statement: "Miami-Dade County Product Control Approved", or as specifically stated in the specific conditions of this Acceptance.

3. Renewals of Acceptance will not be considered if:
   a. There has been a change in the South Florida Building Code affecting the evaluation of this product and the product is not in compliance with the code changes.
   b. The product is no longer the same product (identical) as the one originally approved.
   c. If the Acceptance holder has not complied with all the requirements of this acceptance, including the correct installation of the product.
   d. The engineer who originally prepared, signed and sealed the required documentation initially submitted, is no longer practicing the engineering profession.

4. Any revision or change in the materials, use, and/or manufacture of the product or process shall automatically be cause for termination of this Acceptance, unless prior written approval has been requested (through the filing of a revision application with appropriate fee) and granted by this office.

5. Any of the following shall also be grounds for removal of this Acceptance:
   a. Unsatisfactory performance of this product or process.
   b. Misuse of this Acceptance as an endorsement of any product, for sales, advertising or any other purposes.

6. The Notice of Acceptance number preceded by the words Miami-Dade County, Florida, and followed by the expiration date may be displayed in advertising literature. If any portion of the Notice of Acceptance is displayed, then it shall be done in its entirety.

7. A copy of this Acceptance as well as approved drawings and other documents, where it applies, shall be provided to the user by the manufacturer or its distributors and shall be available for inspection at the job site at all time. The engineer needs not reseal the copies.

8. Failure to comply with any section of this Acceptance shall be cause for termination and removal of Acceptance.

9. This Notice of Acceptance consists of pages 1, 2 and this last page 3.

END OF THIS ACCEPTANCE

Manuel Perez

Manuel Perez, P.E., Product Control Examiner
Product Control Division

Premdor Entry Systems

ACCEPTANCE No.: 01-0314.16

APPROVED : JUN 05 2001

EXPIRES : April 02, 2006

NOTICE OF ACCEPTANCE: EVIDENCE SUBMITTED

(For File ONLY. Not part of NOA.)

A. DRAWINGS

1. Manufacturer's die drawings and sections.
2. Drawing No. **31-1020-EM-I**, ", Sheets 1 thru 6 of 6, "Premdor (Entergy Brand) Steel Edge Single Door with Sidelites in a Wood Frames with a Bumper Threshold (Inswing),"- prepared by manufacturer, dated 07/29/97 with revision C dated 01/15/00.

B. TESTS

1. Test reports on 1) Air Infiltration Test, per SFBC PA 202-94
   2) Uniform Static Air Pressure Test, Loading per SFBC PA 202-94
   3) Water Resistance Test, per SFBC PA 202-94
   4) Large Missile Impact Test per SFBC, PA 201-94
   5) Cyclic Wind Pressure Loading per SFBC, PA 203-94
   6) Forced Entry Test, per SFBC 3603.2 (b) and PA 202-94

   along with marked-up drawings and installation diagram of steel edge single door, prepared by National Certified Testing Laboratories, Test Report No. **210-1880-4, 6 (S) (F) (I) (C)**, dated 12/01/96, tested on November 5, 1996, signed and sealed by Barry D. Portnoy, P.E.

C. CALCULATIONS

1. Anchor calculations prepared by Product & Application Engineering, Inc., Project No. 97-0409, Report No. 02, dated Oct. 16, 1996, signed and sealed by David A. Terwilleger, P.E.

D. MATERIAL CERTIFICATIONS

1. Tensile Test prepared by ATC Associates, Inc., Report No. D70229, Rev. 1, dated February 24, 1997, for steel samples, tested per ASTM A370-95 after the coatings were removed, signed and sealed by Peter G. Read, P.E.
2. Report titled "Small Scale Fire and Hose Stream Tests on 20 Min. (BASF Elastopor) Foam-Core Door" prepared by Underwriters Laboratories, Inc., File No. R18466, tested per ASTM E-152, dated July 3, 1997, signed by Dick Walther and reviewed by Howard Gruszynski.
3. Report titled "Report On The Fire Endurance And Hose Stream Testing Of A 3' 0" x 6' 8" Steel Door" prepared by Warnock Hersey International, Inc., and tested per ASTM E-152, on October 3, 1985.
4. Report No. 114884-1, titled "Flammability" per ASTM D635-97" Rating of Burning and/or Extent and Time of Burning of Self-Supporting Plastics in a Horizontal position," prepared by SGS US Testing Company Inc., dated Nov. 24, 1998, signed and sealed by Joseph G. Cappetta, P.E.

Manuel Perez, P.E. Product Control Examiner
Product Control Division

5. Report No. 114884-2, titled "Ignition properties" per ASTM D1929-96" Testing Ignition Properties of Plastics,'' prepared by SGS US Testing Company Inc., dated Nov. 24, 1998, signed and sealed by Joseph G. Cappetta, P.E.
6. Report No. 114884-3, titled "Smoke Density" per ASTM D-2843-93" Measuring the density of Smoke from the Burning or Decomposition of Plastic," prepared by SGS US Testing Company Inc., dated Nov. 24, 1998, signed and sealed by Joseph G. Cappetta, P.E.
7. Report Titled "Tensile Method for Plastics, d638,mia," specimen name: "White Fina Control," dated 5/16/99, prepared by Celotex.
8. Report Titled "Tensile Method for Plastics, d638,mia," specimen name: "White Fina Exposed," dated 5/16/99, prepared by Celotex.
9. Report Titled "Tensile Method for Plastics, d638,mia," specimen name: "Tan Fina Control," dated 5/16/99, prepared by Celotex.
10. Report Titled "Tensile Method for Plastics, d638," specimen name: "ODLI-2 Weathered 12 month Exposure," dated 12/8/99, prepared by Celotex.
11. Summary Report for ASTM D-1929-, ASTM D-2843-, ASTM D-635-, ASTM G-26/D-38-, prepared by ODL, dated August 26, 1998, signed and sealed by Steven R. Wilkening, P.E.
12. Report No. ODL-01-02-01, titled "Standard Practice for Operating Light Exposure Apparatus (Xenon-Arc Type) With and Without Water for Exposure of Non-Mertallic Materials" per ASTM G 26 and "Standard Test Method for Tensile Properties of Plastics" per ASTM D 638, dated December 14, 2000 for ODL HP Polypropylene lite frame material, issued by PRI Asphalt Technologies.

E. STATEMENTS

1. None

F. OTHERS

1. Notice of Acceptance No.00-0321.18 issued to Premdor Entry Systems for their Premdor (Entergy Brand) Steel Edge Single Door with Sidelites in a Wood Frames with a Bumper Threshold (Inswing) dated 04/28/00, expiring on 04/02/01.

Manuel Perez

Manuel Perez, P.E. Product Control Examiner
Product Control Division

Premdor Entry Systems

ACCEPTANCE No.: 01-0314.16

APPROVED : JUN 05 2001

EXPIRES : April 02, 2006

NOTICE OF ACCEPTANCE: EVIDENCE SUBMITTED

(For File ONLY. Not part of NOA.)

TESTS PERFORMED: **RESULTS:**

TEST	TEST LOADS	DESIGN LOADS
AIR INFILTRATION @ 1.57 PSF SFBC PA 202-94 (0.50 CFM/FT^2)	0.20 CFM/FT^2	----------
UNIFORM STATIC PRESSURE @ DESIGN LOAD SFBC PA 202-94 POSITIVE	+76.0 PSF	+76.0 PSF
UNIFORM STATIC PRESSURE @ DESIGN LOAD SFBC PA 202-94 NEGATIVE	-76.0 PSF	-76 PSF)
WATER RESISTANCE (PSF) SFBC PA 202-94	Not Qualified	----------
UNIFORM STATIC AIR PRESSURE @ FULL TEST LOAD SFBC PA 202-94 POSITIVE	+114.0 PSF	+76.0 PSF)
UNIFORM STATIC AIR PRESSURE @ FULL TEST LOAD SFBC PA 202-94 NEGATIVE	-114.0 PSF	-76.0 PSF
FORCED-ENTRY RESISTANCE (FER) SFBC Section 3603.02 and SFBC PA 202-94	SATISFACTORY	----------
LARGE MISSILE IMPACT TEST SFBC PA 201-94	SATISFACTORY	----------
CYCLIC WIND PRESSURE TEST SFBC PA 203-94 POSITIVE	+98.8 PSF	+76.0 PSF
CYCLIC WIND PRESSURE TEST SFBC PA 203-94 NEGATIVE	-98.9 PSF	-76.1 PSF
Design Pressure Rating (Positive)		**+76.0 PSF**
Design Pressure Rating (Negative)		**-76.0 PSF**

Manuel Perez, P.E. Product Control Examiner
Product Control Division

PREMDOR (ENTERGY BRAND) STEEL EDGE SINGLE DOOR WITH SIDELITES IN WOOD FRAME WITH BUMPER THRESHOLD (INSWING)

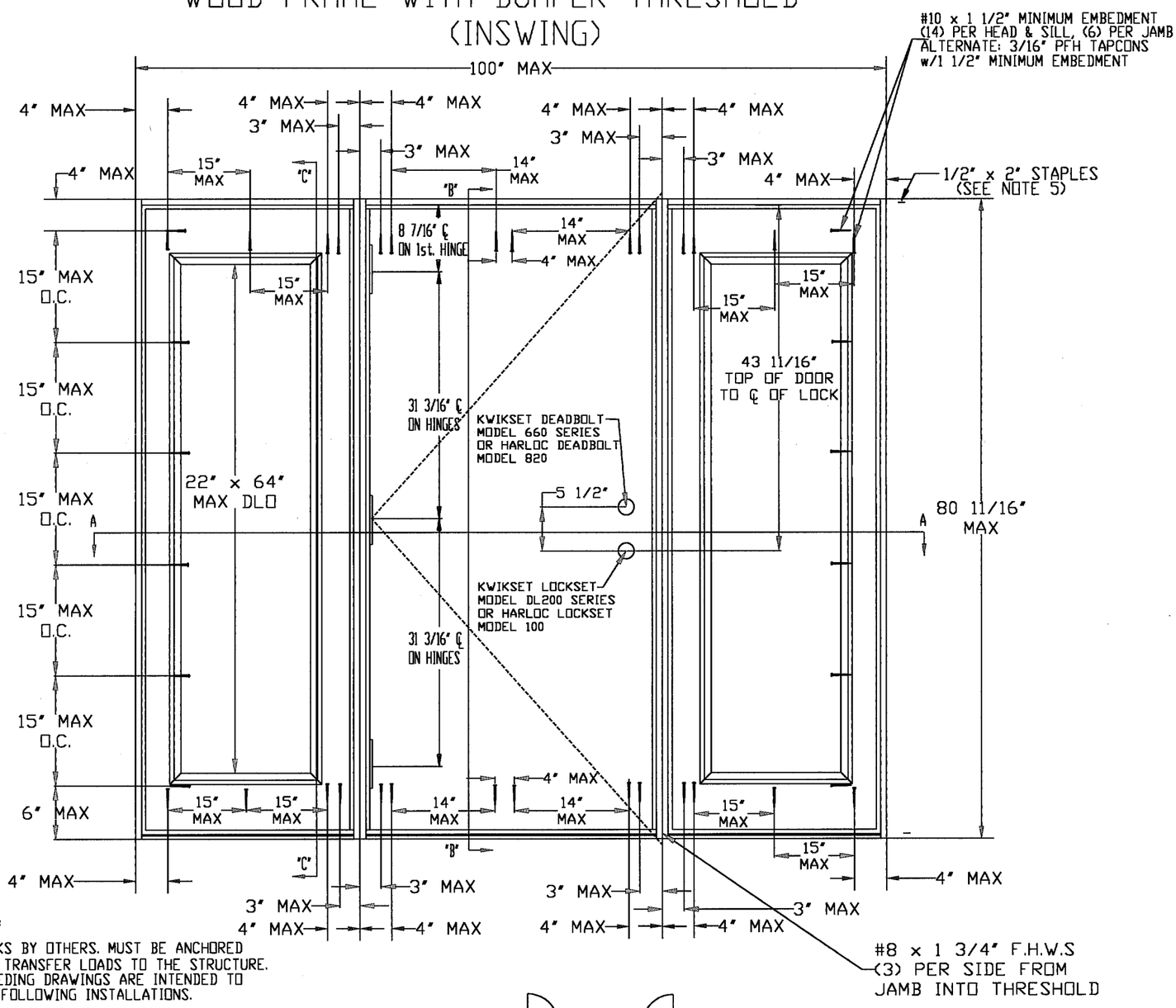

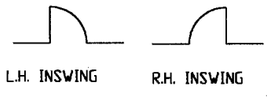

NOTES:

1.) WOOD BUCKS BY OTHERS. MUST BE ANCHORED PROPERLY TO TRANSFER LOADS TO THE STRUCTURE.
2.) THE PRECEDING DRAWINGS ARE INTENDED TO QUALIFY THE FOLLOWING INSTALLATIONS.

A. WOOD FRAME CONSTRUCTION WHERE DOOR SYSTEM IS ANCHORED TO A MINIMUM TWO BY WOOD OPENING.

B. MASONRY OR CONCRETE CONSTRUCTION WHERE DOOR SYSTEM IS ANCHORED TO A MINIMUM TWO BY STRUCTURAL WOOD BUCK.

C. MASONRY OR CONCRETE CONSTRUCTION WHERE DOOR SYSTEM IS ANCHORED DIRECTLY TO CONCRETE OR MASONRY WITH OR WITHOUT A NON-STRUCTURAL ONE BY WOOD BUCK.

3. ALL ANCHORING SCREWS TO BE #10 WITH MINIMUM 1 1/2" EMBEDMENT INTO WOOD SUBSTRATE OR 3/16" PFH TAPCONS WITH 1 1/2" MINIMUM EMBEDMENT INTO MASONRY.
4. UNIT MUST BE INSTALLED WITH "MIAMI-DADE COUNTY APPROVED" SHUTTERS
5. THREE STAPLES PER SIDE JAMB INTO HEADER ON SIDELITES AND DOOR, THREE STAPLES PER JAMB INTO BASE ON SIDELITES.
6. LATEX SEALANT TO BE APPLIED AT SIDE BY SIDE JAMBS AND SIDELITES.
7. DOOR/SIDELITE HEADER, DOOR/SIDELITE JAMBS, AND SIDELITE BASE CORNERS ARE COPED AND BUTT JOINED.
8. DOORS SHALL BE PRE-PAINTED WITH A WATER-BASED EPOXY RUST INHIBITIVE PRIMER PAINT WITH A DRY FILM THICKNESS OF 0.8 TO 1.2 MIL.
9. FRAMES SHALL BE PRE-PAINTED WITH AN ACRYLIC LATEX WATER-BASED/ WATER-REDUCIBLE WHITE PRIMER WITH A DRY FILM THICKNESS OF 0.8 TO 1.2 MIL.

DESIGN PRESSURE RATINGS		
	WHERE WATER INFILTRATION REQUIREMENT IS NEEDED *	WHERE WATER INFILTRATION REQUIREMENT IS NOT NEEDED
Positive	NOT APPROVED *	+76.0 psf
Negative	NOT APPROVED *	-76.0 psf

* UNITS SHALL BE INSTALLED ONLY AT LOCATIONS PROTECTED BY A CANOPY OR OVERHANG SUCH THAT THE ANGLE BETWEEN THE EDGE OF CANOPY OR OVERHANG TO SILL IS LESS THAN 45 DEGREES. UNLESS UNIT IS INSTALLED IN NON-HABITABLE AREAS WHERE THE UNIT AND THE AREA ARE DESIGNED TO ACCEPT WATER INFILTRATION.

APPROVED AS COMPLYING WITH THE SOUTH FLORIDA BUILDING CODE
DATE JUN 05 2001
BY Manuel Perez
PRODUCT CONTROL DIVISION
BUILDING CODE COMPLIANCE OFFICE
ACCEPTANCE NO. 01-0314.16

LTR.	REVISIONS	DATE	BY
C	DADE COUNTY MODIFICATIONS	1/23/01	JD
B	ADD RATINGS & REDRAWN	8-26-98	RS
A	ADD SCREWS FROM JAMB TO T'HOLD	11-11-97	R.S.
A	ADD NOTE 4 FOR STAPLES	11-11-97	R.S.

LIMITS: UNLESS NOTED, FRAC. : DEC. : ANG. :
EXTRUSIONS: UNLESS NOTED, STD. COMPL. TOL'S.
ENGINEER:
PART NAME: ENTERGY STEEL EDGE DOOR W/SIDELITE
MAT'L: SCALE:
DR. BY R.S. DATE 4-9-97

PREMDOR ENTRY SYSTEMS
911 E. JEFFERSON
PITTSBURG, KS. 66762

31-1020-EM-I
SHEET 1 OF 6

REVISION LETTER C

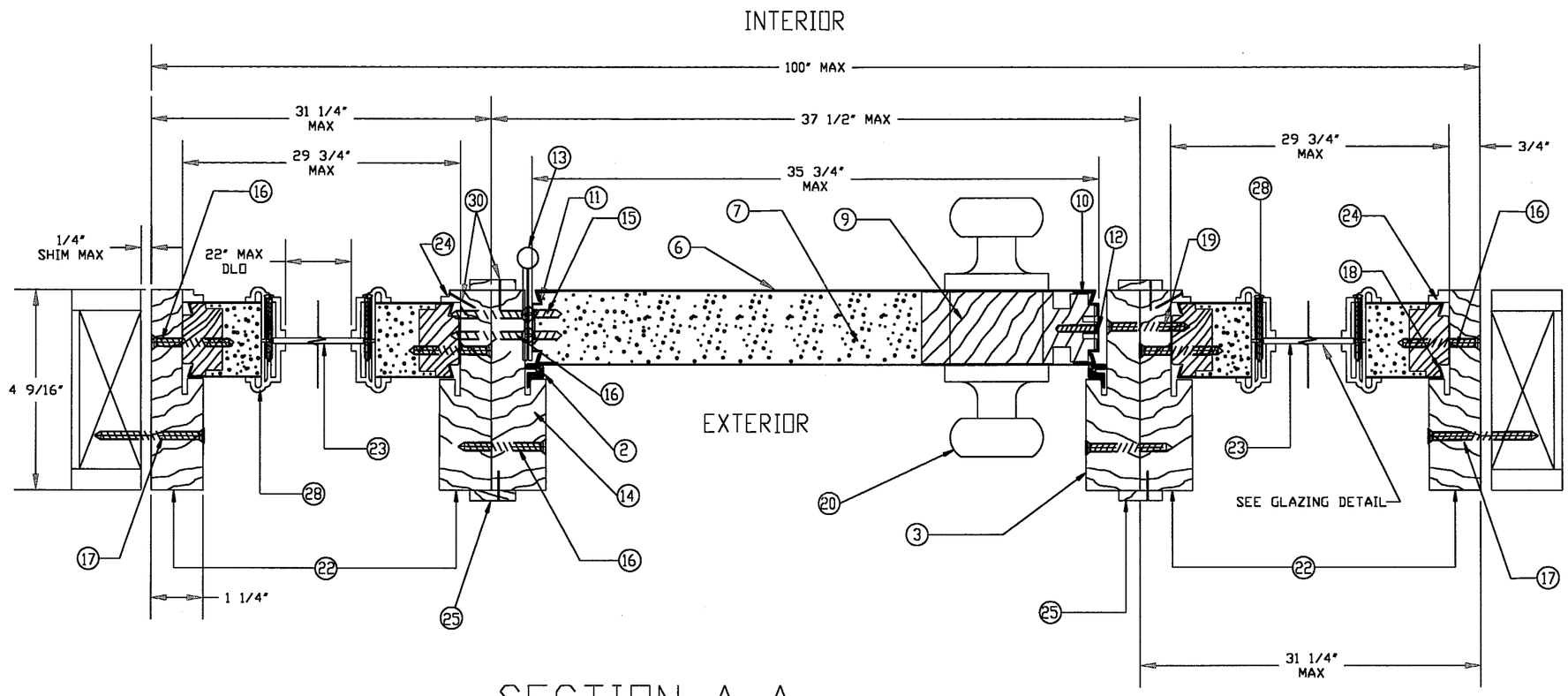

SECTION A-A
INSWING

OTHER CONFIGURATIONS

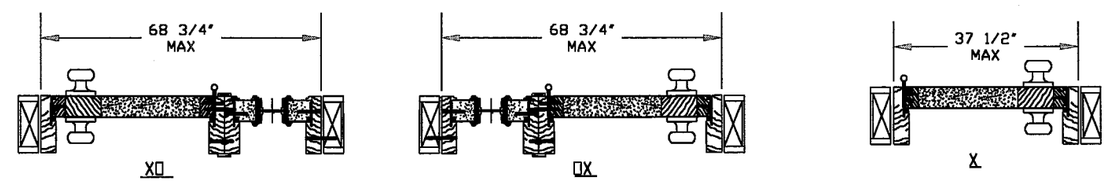

GLAZING DETAIL

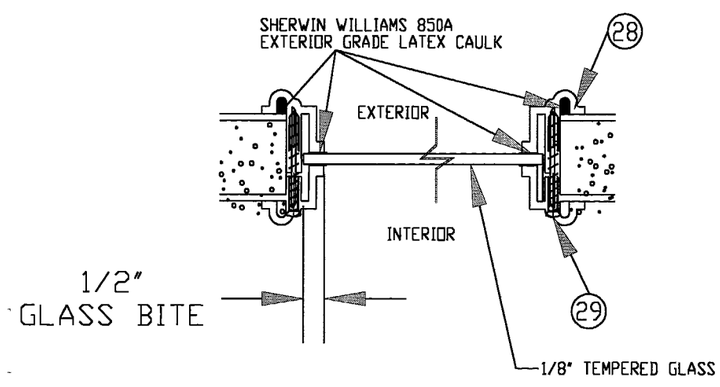

APPROVED AS COMPLYING WITH THE
SOUTH FLORIDA BUILDING CODE
DATE JUN 05 2001
BY Manuel Berg
PRODUCT CONTROL DIVISION
BUILDING CODE COMPLIANCE OFFICE
ACCEPTANCE NO 01-0314.16

LTR.	REVISIONS	DATE	BY
C	DADE COUNTY MODIFICATIONS	1/11/01	JD
B	ADDED PAGE 5 (DOOR OPTIONS)	10-1-98	RS
A	ADD SCREWS TO LITE FRAMES & ADD OTHER DOOR CONFIGURATIONS	12-18-97	R.S.

LIMITS: UNLESS NOTED, FRAC. : DEC. : ANG. :
EXTRUSIONS: UNLESS NOTED, STD. COML. TOL'S.
ENGINEER:
PART NAME: ENTERGY DOOR W/SIDELITES (A-A)
DR. BY R.S. | DATE 7-29-97 | MAT'L: | SCALE: NTS

PREMDOR ENTRY SYSTEMS
911 E. JEFFERSON
PITTSBURG, KS. 66762

31-1020-EM-I
SHEET 2 OF 6

REVISION LETTER C

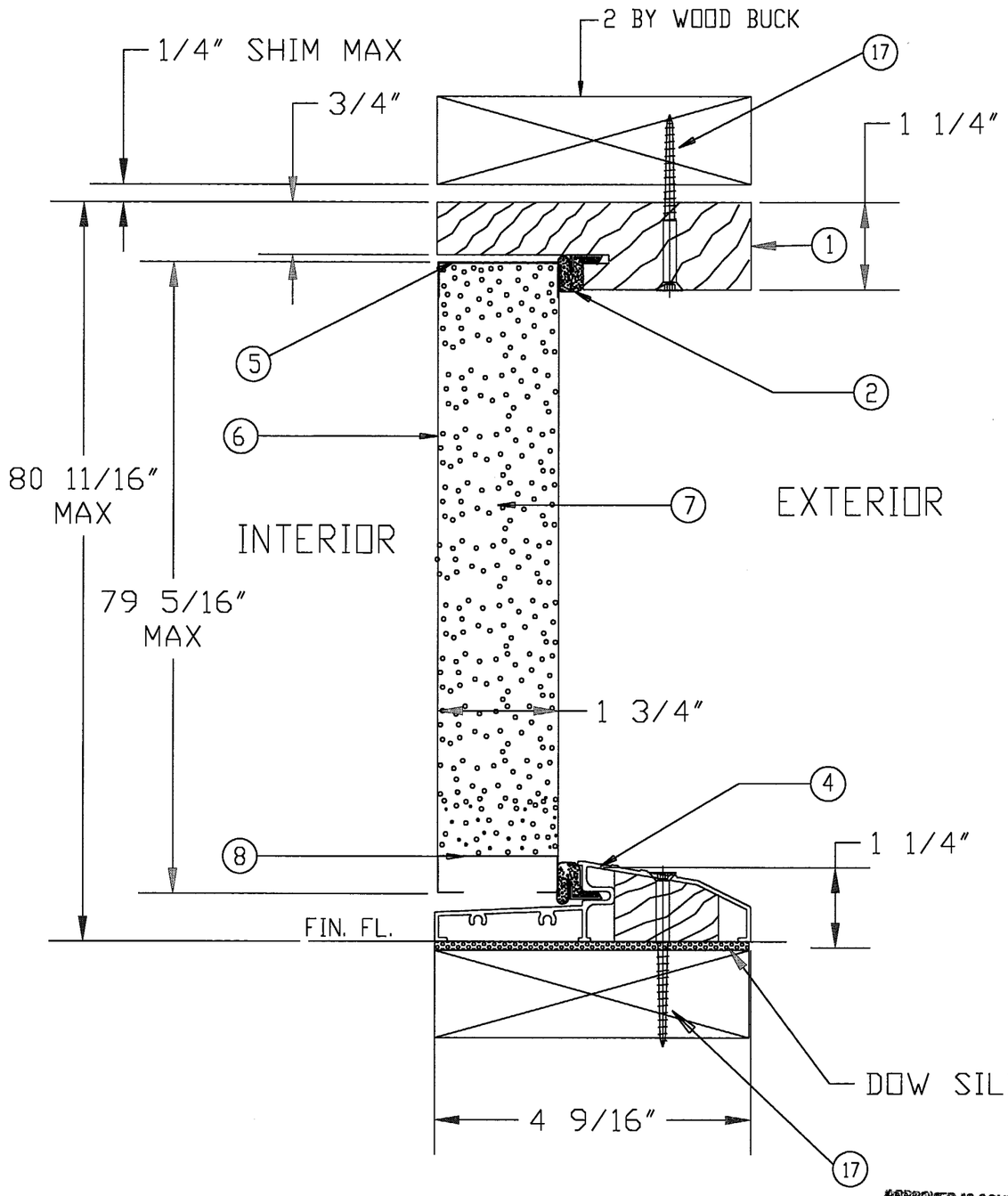

SECTION B-B

MATERIALS LIST

ITEM NO.	DESCRIPTION	PART NUMBER	COMMENTS
1	WOOD HEAD JAMB	EM-14	1 1/4" X 4 9/16" MTL. TO BE PINE OR EQUIVALENT
2	COMPRESSION WEATHERSTRIP	EM-25	LOCKSCREEN BRAND LOXSEAL 9650 (BRONZE)
3	WOOD STRIKE JAMB	EM-12	1 1/4" X 4 9/16" MTL. TO BE PINE OR EQUIVALENT
4	ALUMINUM-BUMPER THRESHOLD	EM-15	PREMDOR BRAND OR EQUIVALENT - 1 1/4" x 4 9/16"
5	TOP CHANNEL	EM-08	PREMDOR BRAND - 1 11/16" - 20 GA STEEL
6	STEEL SKIN	26 ga. (.017 +.004 -.000)	MIN. YIELD STRENGTH 31,000 PSI MIN. THICKNESS PER TENSILE TEST REPORT IS .021"
7	POLYURETHANE FOAM CORE	BASF FOAM - DENSITY 2.0 TO 2.5 lbs./ft^3	
8	BOTTOM CHANNEL	EM-07	PREMDOR BRAND - 1 11/16" - 20 GA STEEL
9	WOOD LOCK BLOCK	EM-09	4" X 9 1/2" MTL. TO BE PINE OR EQUIVALENT
10	STRIKE STILE	EM-06	PREMDOR BRAND - 1 11/16" - 20 GA STEEL
11	HINGE STILE	EM-05	PREMDOR BRAND - 1 11/16" - 20 GA STEEL
12	LOCK PREP FILLER PLATE	EM-10	PREMDOR BRAND - .050" THICK- MTL. TO BE POLYETHYLENE
13	4"x4" HINGE	EM-16	HAGER BRAND HINGE OR EQUIVALENT - .097 THICK (STEEL)
14	WOOD HINGE JAMB	EM-13	1 1/4" X 4 9/16" MTL. TO BE PINE OR EQUIVALENT
15	#10-24 x 1/2" F.H.M.S.		(4) SCREWS PER HINGE INTO DOOR
16	#10 X 2" F.H.W.S.		(5) SCREWS THROUGH HINGE JAMB INTO SIDELITE JAMB, 8" DOWN FROM TOP, MAX 18" O.C. THEREAFTER (10) SCREWS THROUGH STRIKE JAMB INTO SIDELITE JAMB, 4" DOWN FROM TOP MAX 8" O.C. THEREAFTER (4) SCREWS THROUGH EACH HINGE INTO DOOR JAMB (6) SCREWS THROUGH EACH SIDELITE JAMB INTO SIDELITE, 4" DOWN FROM TOP, MAX 15" O.C. THEREAFTER
17	#10 F.H.W.S. W/MINIMUM 1 1/2 EMBEDMENT OR 3/16" PFH TAPCONS W/MINIMUM 1 1/2" EMBEDMENT		REFER TO ELEVATION VIEW, FOR # OF SCREWS USED AND LOCATIONS
18	SIDELITE WOOD STILE	EM-28	15/16" X 1 11/16" MTL. TO BE PINE OR EQUIVALENT
19	#8 x 2" F.H.W.S.		(2) SCREWS AT EACH STRIKE PLATE
20	LOCKSET		KWIKSET BRAND 200 LOCK OR HARLOC BRAND 100 LOCK
21	NOT USED ON THIS MODEL		
22	WOOD SIDELITE JAMB	EM-19	1 1/4" X 4 9/16" MTL. TO BE PINE OR EQUIVALENT
23	22" X 64" SINGLE PANEL GLASS	EM-20	TEMPERED GLASS IN POLYPROPYLENE FRAME- DC-1643 - (ODL-2) 1/8" CLEAR TEMPERED GLASS
24	SIDELITE TRIM (WOOD)	EM-21	5/16 x 1/2" MTL. TO BE PINE OR EQUIVALENT
25	WOOD CASING	EM-22	1/8" x 1" MTL. TO BE PINE OR EQUIVALENT - ITEMS ARE MOLDINGS USED FOR "SIDE BY SIDE JAMBS" AS MULLIONS
26	WOOD SIDELITE HEAD JAMB	EM-23	1 1/4" X 4 9/16" MTL. TO BE PINE OR EQUIVALENT
27	WOOD SIDELITE BASE	EM-24	1 1/4" X 4 9/16" MTL. TO BE PINE OR EQUIVALENT
28	POLYPROPYLENE LITE FRAME	DC-1643, ODL-2	HP Polypropylene by ODL
29	#6 X 1 1/2" PAN HEAD SCREWS		18 PER FRAME SCREW SPACING TO BE 3" IN FROM EACH CORNER AND NOT TO EXCEED 14" OC THERE AFTER.
30	PIN NAIL		3/4" LONG NAIL, 4" IN FROM END, MAX 8" O.C. THERAFTER, USED ON MULLIONS AND TRIM

APPROVED AS COMPLYING WITH THE SOUTH FLORIDA BUILDING CODE
DATE JUN 05 2001
BY Samuel Perez
PRODUCT CONTROL DIVISION
BUILDING CODE COMPLIANCE OFFICE
ACCEPTANCE NO. 01-0314.16

LIMITS: UNLESS NOTED, FRAC. ± DEC. ± ANG. ± EXTRUSIONS: UNLESS NOTED, STD. COM'L. TOL'S.	B	DADE COUNTY MODIFICATIONS	1/11/01	JD
	A	ADDED PAGE 5 (DOOR OPTIONS)	10-1-98	RS
ENGINEER:	LTR.	REVISIONS	DATE	BY
	PART NAME: ENTERGY STEEL EDGE DOOR (B-B)			
DR. BY R.S. DATE 7-29-97	MAT'L:	SCALE:		

PREMDOR ENTRY SYSTEMS
911 E. JEFFERSON
PITTSBURG, KS. 66762

A

31-1020-EM-I
SHEET 3 OF 6

REVISION LETTER B

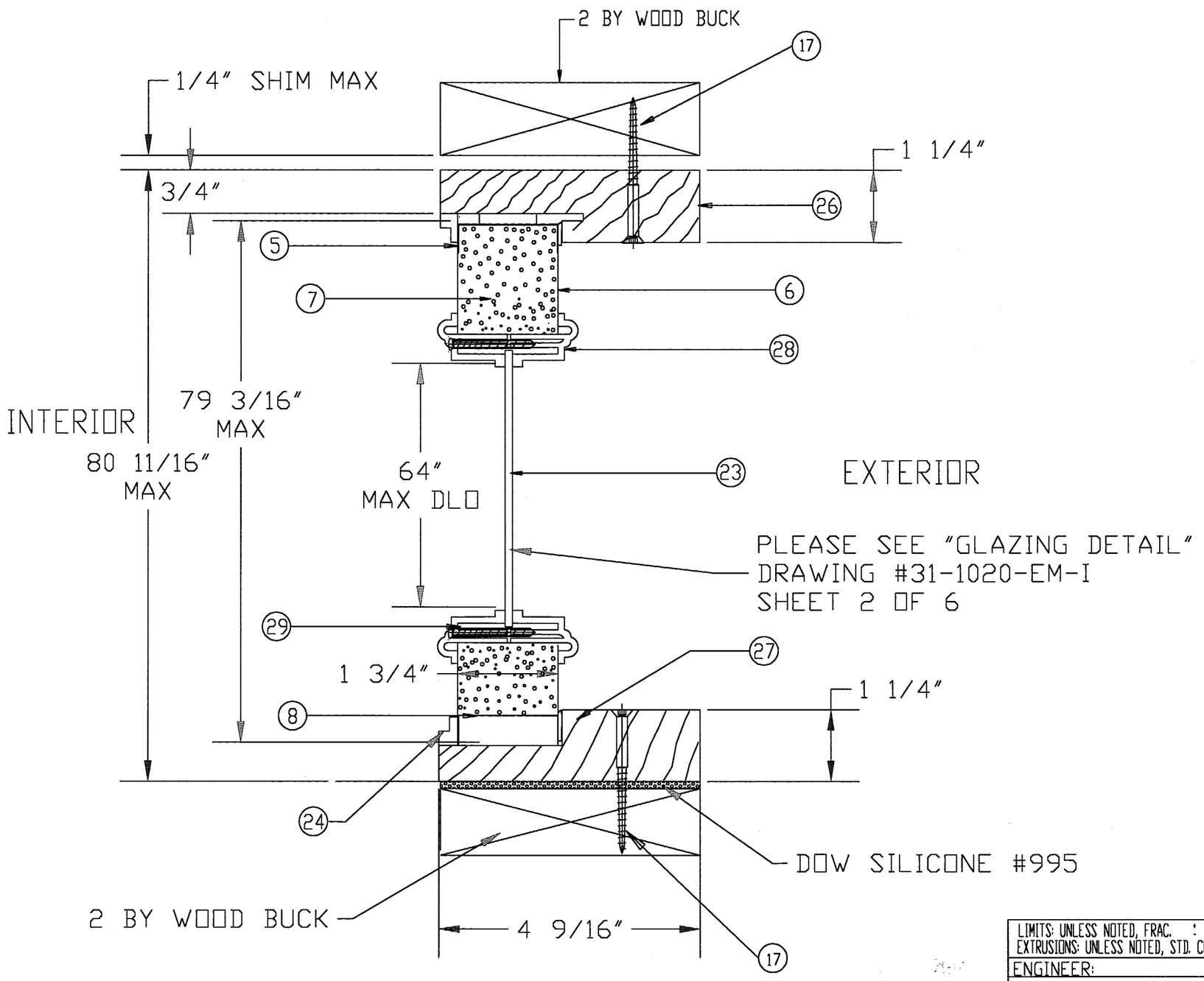

SECTION C-C

APPROVED AS COMPLYING WITH THE
SOUTH FLORIDA BUILDING CODE
DATE JUN 05 2001
BY Manuel Perez
PRODUCT CONTROL DIVISION
BUILDING CODE COMPLIANCE OFFICE
ACCEPTANCE NO 01-0314.16

LIMITS: UNLESS NOTED, FRAC. : DEC. : ANG. :
EXTRUSIONS: UNLESS NOTED, STD. COM'L. TOL'S.

ENGINEER:

DR. BY R.S. | DATE 7-29-97

LTR.	REVISIONS	DATE	BY
D	DADE COUNTY MODIFICATIONS	1/11/01	JD
C	MATERIAL WAS POLYSTYRENE	6-2-99	RS
B	ADDED PAGE 5 (DOOR OPTIONS)	10-1-98	RS
A	ADD SCREWS TO LITE FRAME & MATERIAL LIST	12-18-97	R.S.

PART NAME: ENTERGY STEEL EDGE SIDELITE (C-C)
MAT'L: | SCALE:

PREMDOR ENTRY SYSTEMS
911 E. JEFFERSON
PITTSBURG, KS. 66762

31-1020-EM-I
SHEET 4 OF 6

REVISION LETTER D

OTHER DOOR CONFIGURATIONS

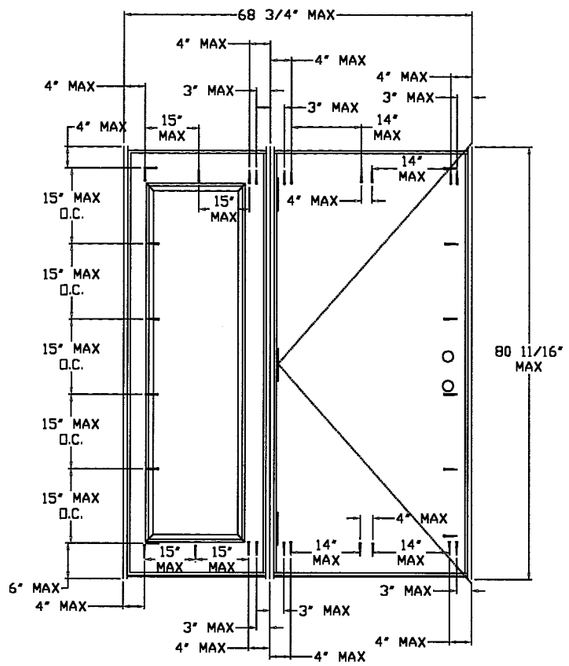

OX

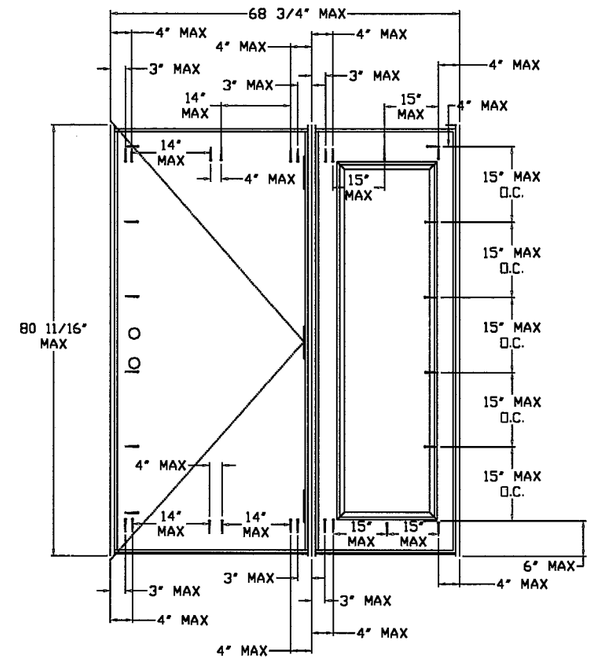

XO

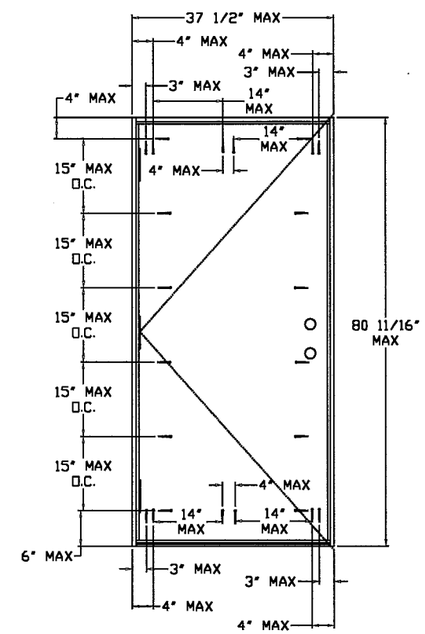

X

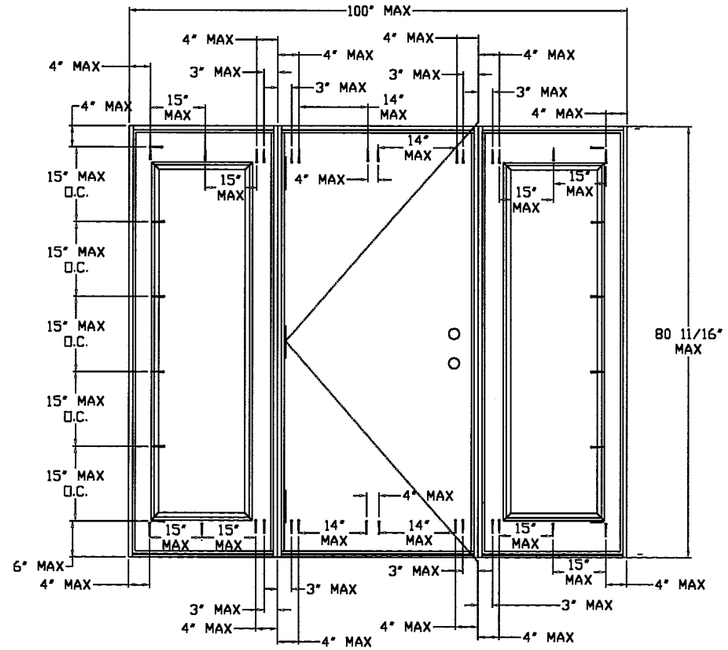

OXO

APPROVED AS COMPLYING WITH THE SOUTH FLORIDA BUILDING CODE
DATE JUN 05 2001
BY Manuel Sanz
PRODUCT CONTROL DIVISION
BUILDING CODE COMPLIANCE OFFICE
ACCEPTANCE NO. 01-0314.16

LIMITS: UNLESS NOTED, FRAC. : DEC. : ANG. : EXTRUSIONS: UNLESS NOTED, STD. COM'L. TOL'S.			
ENGINEER:	LTR.	REVISIONS	DATE / BY
	PART NAME:		
DR. BY J.D. / DATE 1-11-01	MAT'L:	SCALE:	
PREMDOR ENTRY SYSTEMS 911 E. JEFFERSON PITTSBURG, KS. 66762	31-1020-EM-I SHEET 5 OF 6		
	REVISION LETTER		

OTHER DOOR PANEL STYLES

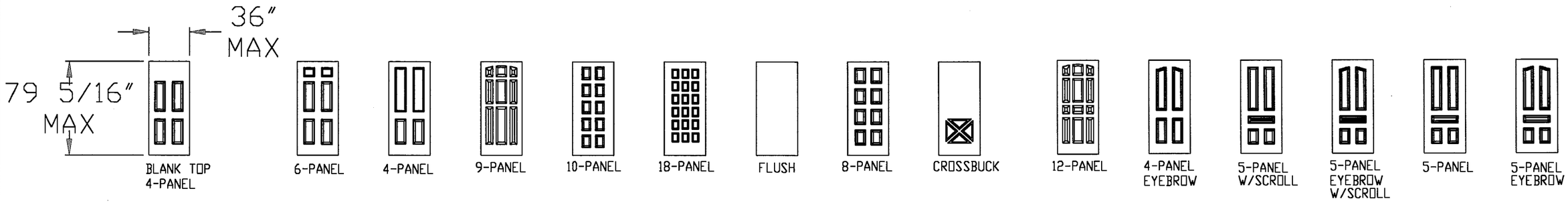

OTHER SIDELITE STYLES

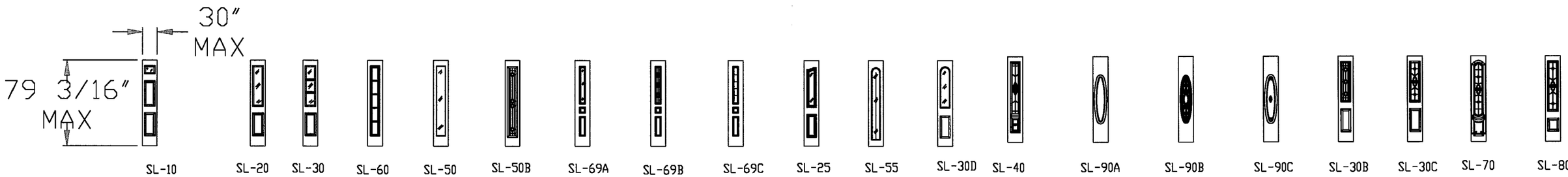

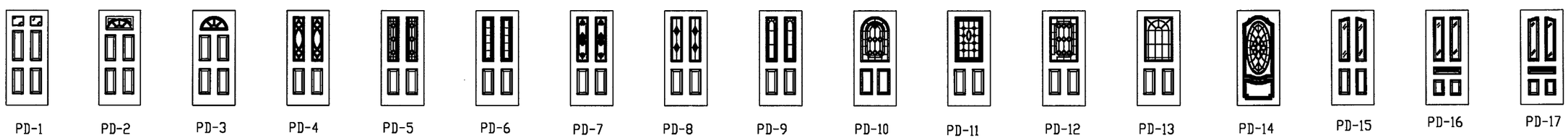

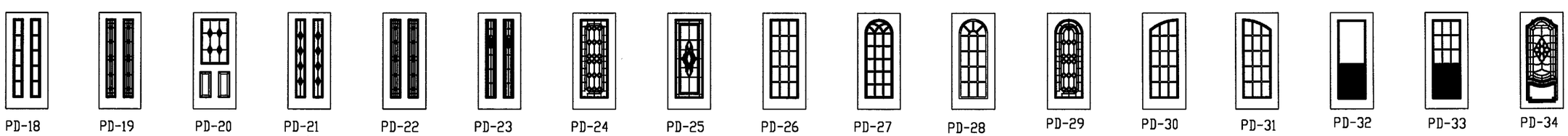

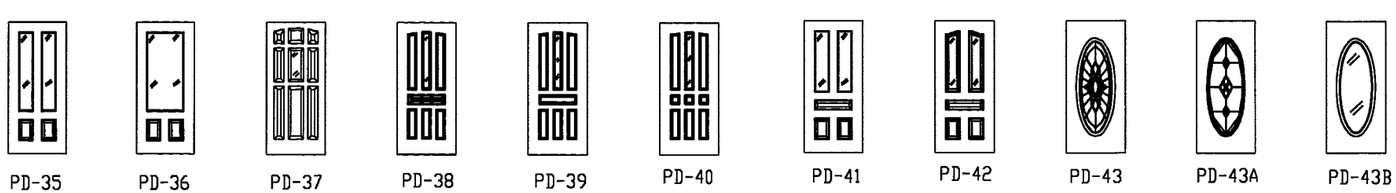

APPROVED AS COMPLYING WITH THE SOUTH FLORIDA BUILDING CODE
DATE JUN 05 2001
BY
PRODUCT CONTROL DIVISION
BUILDING CODE COMPLIANCE OFFICE
ACCEPTANCE NO. 01-0314.16

LIMITS: UNLESS NOTED, FRAC. : DEC. : ANG. :
EXTRUSIONS: UNLESS NOTED, STD. COM'L. TOL'S.

ENGINEER:

DR. BY J.D. | DATE 1/15/01

LTR.	REVISIONS	DATE	BY

PART NAME: PREMDOR DOOR OPTIONS

MAT'L: | SCALE:

PREMDOR ENTRY SYSTEMS
911 E. JEFFERSON
PITTSBURG, KS. 66762

31-1020-EM-I
SHEET 6 OF 6

REVISION LETTER