MIAMI-DADE

MIAMI-DADE COUNTY, FLORIDA
METRO-DADE FLAGLER BUILDING

BUILDING CODE COMPLIANCE OFFICE
METRO-DADE FLAGLER BUILDING
140 WEST FLAGLER STREET, SUITE 1603
MIAMI, FLORIDA 33130-1563
(305) 375-2901 FAX (305) 375-2908

CONTRACTOR LICENSING SECTION
(305) 375-2527 FAX (305) 375-2558

CONTRACTOR ENFORCEMENT DIVISION
(305) 375-2966 FAX (305) 375-2908

PRODUCT CONTROL DIVISION
(305) 375-2902 FAX (305) 372-6339

PRODUCT CONTROL NOTICE OF ACCEPTANCE

PGT Industries
1070 Technology Drive
Nokomis ,FL 34275

Your application for Notice of Acceptance (NOA) of:
2"x Heavy Wall - Aluminum Tube Clipped Mullion
under Chapter 8 of the Code of Miami-Dade County governing the use of Alternate Materials and Types of Construction, and completely described herein, has been recommended for acceptance by the Miami-Dade County Building Code Compliance Office (BCCO) under the conditions specified herein.

This NOA shall not be valid after the expiration date stated below. BCCO reserves the right to secure this product or material at any time from a jobsite or manufacturer's plant for quality control testing. If this product or material fails to perform in the approved manner, BCCO may revoke, modify, or suspend the use of such product or material immediately. BCCO reserves the right to revoke this approval, if it is determined by BCCO that this product or material fails to meet the requirements of the South Florida Building Code.

The expense of such testing will be incurred by the manufacturer.

ACCEPTANCE NO.: 01-0323.03
EXPIRES: 06/28/2006

Raul Rodriguez
Chief Product Control Division

THIS IS THE COVERSHEET, SEE ADDITIONAL PAGES FOR SPECIFIC AND GENERAL CONDITIONS
BUILDING CODE & PRODUCT REVIEW COMMITTEE

This application for Product Approval has been reviewed by the BCCO and approved by the Building Code and Product Review Committee to be used in Miami-Dade County, Florida under the conditions set forth above.

Francisco J. Quintana, R.A.
Director
Miami-Dade County
Building Code Compliance Office

APPROVED: 06/28/2001

PGT Industries

ACCEPTANCE No.: 01-0323.03

APPROVED : JUN 2 8 2001

EXPIRES : JUN 2 8 2006

NOTICE OF ACCEPTANCE: SPECIFIC CONDITIONS

1. SCOPE

1.1 This approves a clipped mullion system, as described in Section 2 of this Notice of Acceptance, designed to comply with the South Florida Building Code (SFBC), 1994 Edition for Miami-Dade County, for the locations where the pressure requirements, as determined by SFBC Chapter 23, do not exceed the Design Pressure Rating values indicated in the approved drawings.

2. PRODUCT DESCRIPTION

2.1 The **2"x Heavy Wall - Aluminum Tube Clipped Mullion** and its components shall be constructed in strict compliance with the following documents: Drawing No **6623**, Sheets 1 through 5 of 5, titled "2" Heavy Wall Mullion Arrangement Detail", prepared by manufacturer, dated 4/28/00, signed and sealed by Robert L. Clark, P.E., bearing the Miami-Dade County Product Control approval stamp; with the Notice of Acceptance number and approval date by the Miami-Dade County Product Control Division. These documents shall hereinafter be referred to as the approved drawings.

3. LIMITATIONS

3.1 This approval applies to clipped structural mullions to be installed vertically or horizontally, as shown in the approved drawings.

3.2 For Design Pressure Rating vs. Mullion Length and Opening Width, for either 2x4x.250 (6 anchors) mullion or 2x6x.250 (6/8 anchors) mullion, see corresponding table in approved drawings.

3.3 Window sizes and design pressures are to be limited only to those appearing on charts referenced above and also listed in the individual window's Notice of Acceptance.

4. INSTALLATION

4.1 The clipped mullion system and its components shall be installed in strict compliance with the approved drawings.

4.2 This mullion **can** be installed as part of an impact resistant unit.

5. LABELING

5.1 Each unit shall bear a permanent label with the manufacturer's name or logo, city, state and following statement: "Miami-Dade County Product Control Approved".

6. BUILDING PERMIT REQUIREMENTS

6.1 Application for building permit shall be accompanied by copies of the following:

- **6.1.1** This Notice of Acceptance, with mullion option indicated.
- **6.1.2** The Notice of Acceptance of each door and/or fixed lite attached to mullion.
- **6.1.3** Duplicate copies of the approved drawings, as identified in Section 2 of this Notice of Acceptance, clearly marked to show the components selected for the proposed installation.
- **6.1.4** Any other documents required by the Building Official or the South Florida Building Code (SFBC) in order to properly evaluate the installation of this system.

Manuel Perez

Manuel Perez, P.E. Product Control Examiner
Product Control Division

PGT Industries

ACCEPTANCE No.: 01-0323.03

APPROVED : JUN 28 2001

EXPIRES : JUN 28 2006

NOTICE OF ACCEPTANCE: STANDARD CONDITIONS

1. Renewal of this Acceptance (approval) shall be considered after a renewal application has been filed and the original submitted documentation, including test supporting data, engineering documents, are no older than eight (8) years.

2. Any and all approved products shall be permanently labeled with the manufacturer's name, city, state, and the following statement: "Miami-Dade County Product Control Approved", or as specifically stated in the specific conditions of this Acceptance.

3. Renewals of Acceptance will not be considered if:
   - **a.** There has been a change in the South Florida Building Code affecting the evaluation of this product and the product is not in compliance with the code changes.
   - **b.** The product is no longer the same product (identical) as the one originally approved.
   - **c.** If the Acceptance holder has not complied with all the requirements of this acceptance, including the correct installation of the product.
   - **d.** The engineer who originally prepared, signed and sealed the required documentation initially submitted, is no longer practicing the engineering profession.

4. Any revision or change in the materials, use, and/or manufacture of the product or process shall automatically be cause for termination of this Acceptance, unless prior written approval has been requested (through the filing of a revision application with appropriate fee) and granted by this office.

5. Any of the following shall also be grounds for removal of this Acceptance:
   - **a.** Unsatisfactory performance of this product or process.
   - **b.** Misuse of this Acceptance as an endorsement of any product, for sales, advertising or any other purposes.

6. The Notice of Acceptance number preceded by the words Miami-Dade County, Florida, and followed by the expiration date may be displayed in advertising literature. If any portion of the Notice of Acceptance is displayed, then it shall be done in its entirety.

7. A copy of this Acceptance as well as approved drawings and other documents, where it applies, shall be provided to the user by the manufacturer or its distributors and shall be available for inspection at the job site at all time. The engineer needs not reseal the copies.

8. Failure to comply with any section of this Acceptance shall be cause for termination and removal of Acceptance.

9. This Notice of Acceptance consists of pages 1, 2 and this last page 3.

END OF THIS ACCEPTANCE

Manuel Perez

Manuel Perez, P.E., Product Control Examiner
Product Control Division

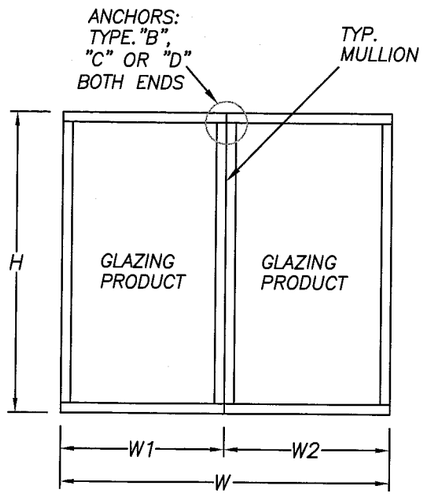

W = W1+W2

(2) WINDOWS MULLED TOGETHER

FOR DETERMINING MAX ALLOWABLE
DESIGN PRESSURE SEE TABLES
ON PAGE 5 OF 5
MAX OPENING = W OR W1+W2
MULL LENGTH = H

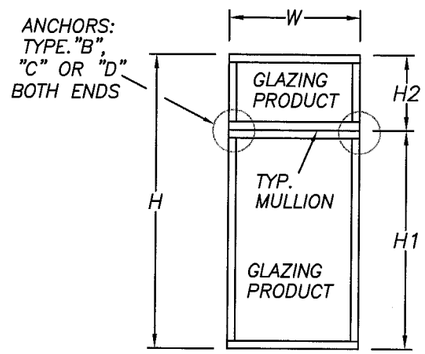

H = H1+H2

(1) WINDOW MULLED W/ONE ABOVE

FOR DETERMINING MAX ALLOWABLE
DESIGN PRESSURE SEE TABLES
ON PAGE 5 OF 5
MAX OPENING = H OR H1+H2
MULL LENGTH = W

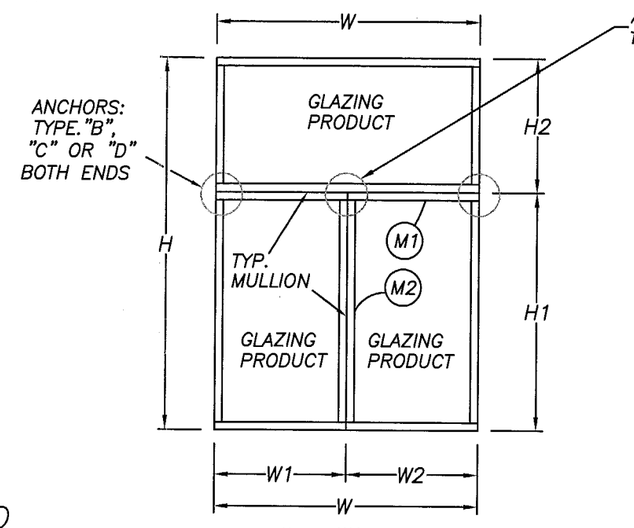

W = W1+W2
H = H1+H2

(2) WINDOWS MULLED W/ONE ABOVE

FOR DETERMINING MAX ALLOWABLE
DESIGN PRESSURE SEE TABLES
ON PAGE 5 OF 5
M1) MAX OPENING = H OR H1+H2
MULL LENGTH = W OR W1+W2
M2) MAX OPENING = W OR W1+W2
MULL LENGTH = H1

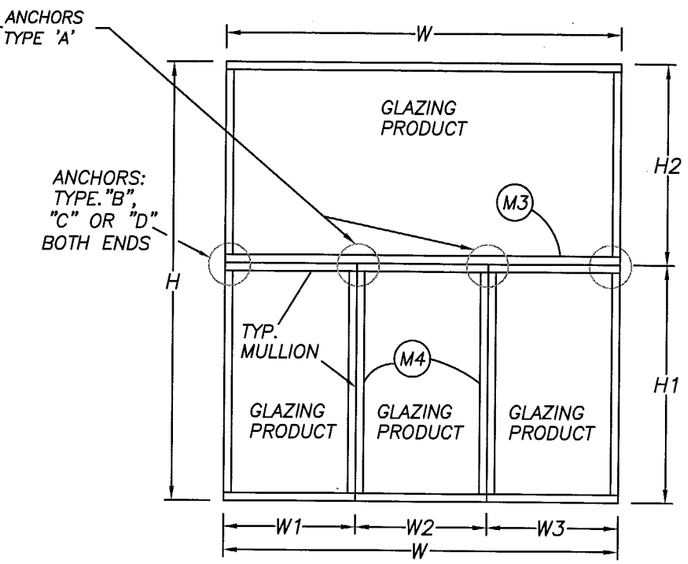

W = W1+W2+W3
H = H1+H2

MULTIPLE WINDOWS MULLED W/ONE ABOVE

FOR DETERMINING MAX ALLOWABLE
DESIGN PRESSURE SEE TABLES
ON PAGE 5 OF 5
M3) MAX OPENING = H OR H1+H2
MULL LENGTH = W OR W1+W2+W3
M4) MAX OPENING = W1+W2 OR W2+W3
MULL LENGTH = H1

NOTES:

1. FOR ANCHORAGE TYPE, QUANTITY AND LOCATION REFER TO SHEETS 2, 3 AND 5
2. WINDOWS MAY BE MULLED TOGETHER, TO A MAX. OF 5 UNITS
3. MULLIONS ARE APPROVED FOR IMPACT & NON-IMPACT
4. REFERENCE TEST REPORT FTL-2902, 2903 AND 2975

APPROVED AS COMPLYING WITH THE
SOUTH FLORIDA BUILDING CODE
DATE JUN 28 2001
BY Manuel Perez
PRODUCT CONTROL DIVISION
BUILDING CODE COMPLIANCE OFFICE
ACCEPTANCE NO. 01-0323.03

5/24/01
Robert L. Clark, P.E.
P.E. #39712
Structural

PGT INDUSTRIES

Revsd By:	Date:	Chkd By:	Date:	Revisions:	
Drawn By: P.J.P.		Date: 4/28/00			
Description: 2" HEAVY WALL MULLION ARRANGEMENT DETAIL					

1070 TECHNOLOGY DRIVE NOKOMIS, FL 34275	P.O. BOX 1529 NOKOMIS, FL 34274	Series/Model: MULLS	Scale: 1x	Sheet: 1 of 5	Drawing No. 6623	Rev:

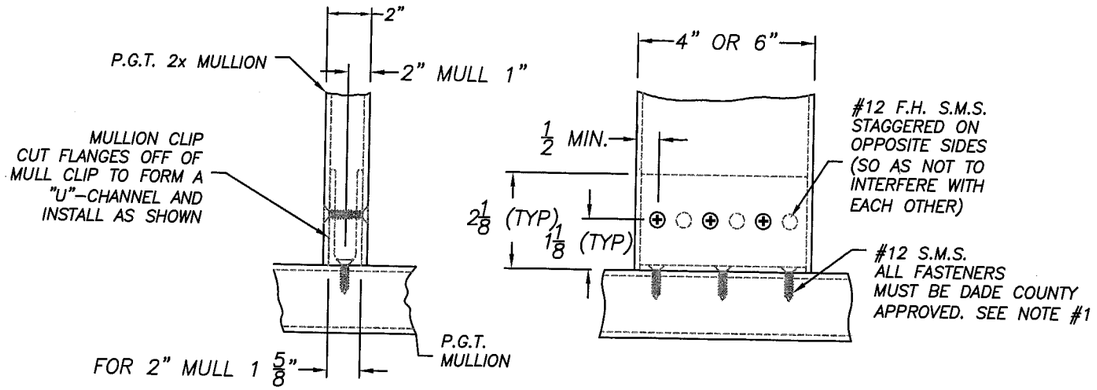

TYPICAL MULLION TO MULLION INSTALLATION TYPE "A".

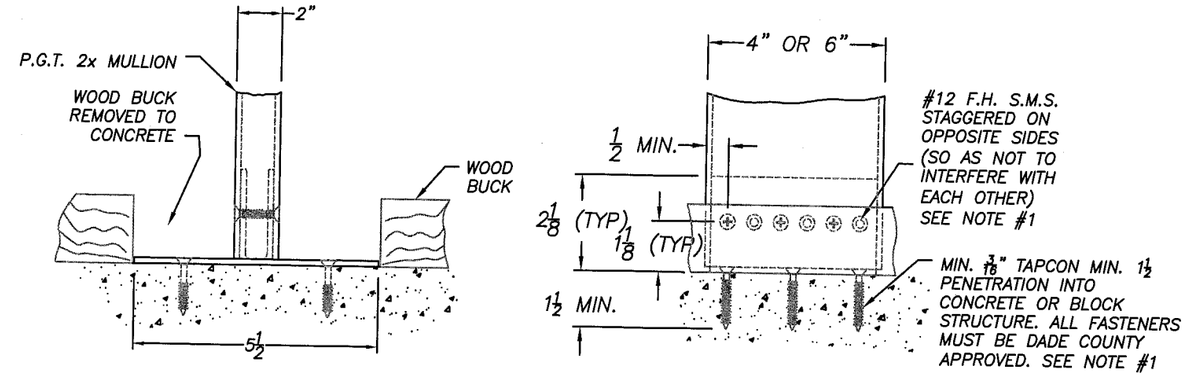

TYPICAL MULLION TO STRUCTURE WITH WOOD BUCK REMOVED FROM CONC. TYPE "C".

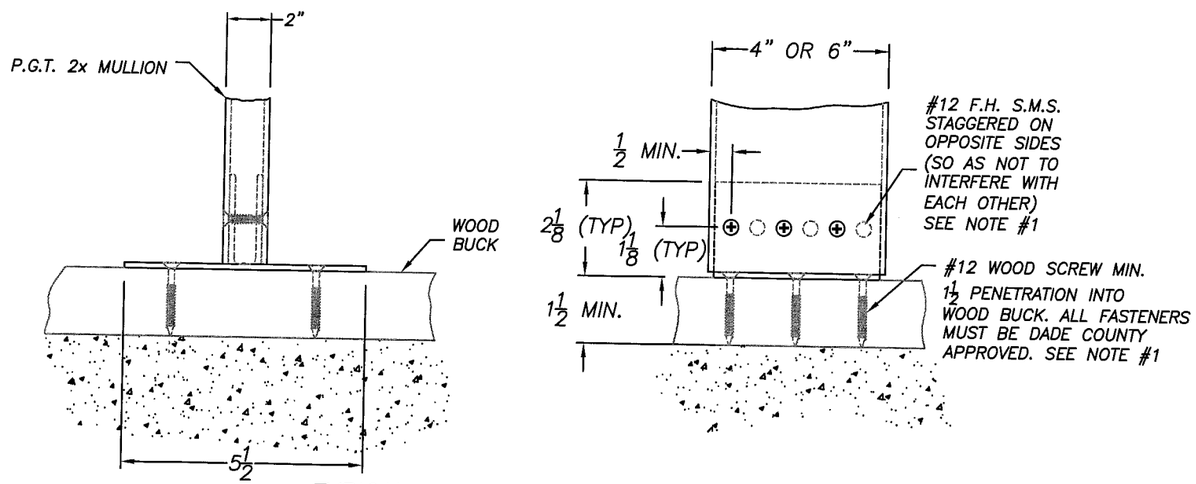

TYPICAL MULLION TO STRUCTURE WITH WOOD BUCK TYPE "B".

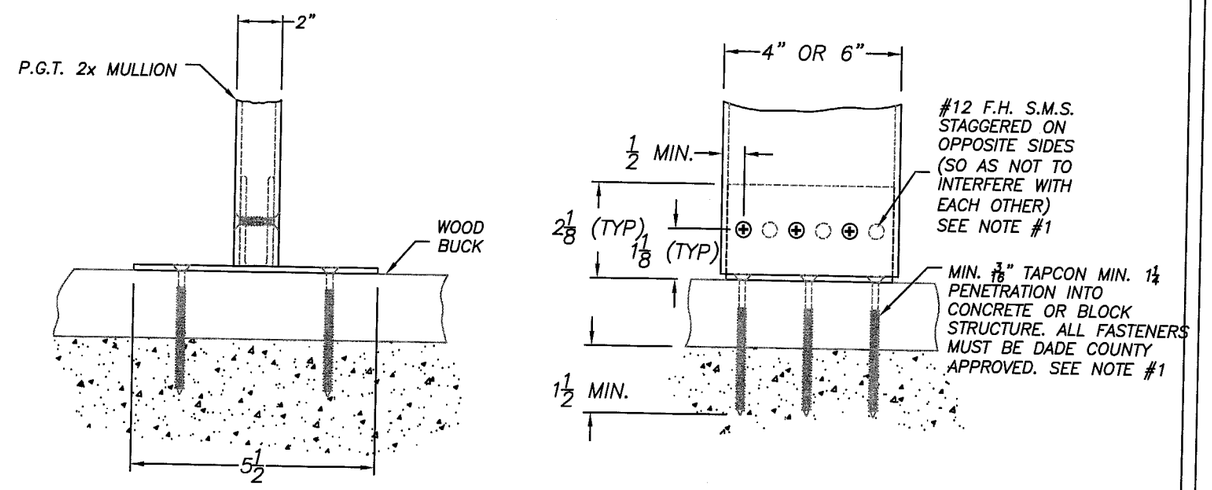

TYPICAL MULLION TO STRUCTURE WITH WOOD BUCK AND CONC. TYPE "D".

NOTE:
1. FOR MULL SIZE AND QUANTITY OF ANCHORS REQUIRED SEE SHEET 5. FOR ANCHOR LOCATIONS SEE SHEET 3. QUANTITY OF ANCHORS FOR MULL-TO-CLIP IS THE SAME AS THE QUANTITY OF ANCHORS FROM CLIP-TO-OPENING.
2. REFERENCE TEST REPORT FTL-2902, 2903 AND 2975

IMPORTANT:
QUANTITY OF ANCHORS SHOWN ARE FOR A PICTORIAL REPRESENTATION ONLY. FOR CORRECT QUANTITY OF ANCHORS PLEASE REFER TO CHARTS AND FIND THE CORRECT MULL SIZE AND PRESSURE REQ'D FOR YOUR SPECIFIC APPLICATION.

APPROVED AS COMPLYING WITH THE
SOUTH FLORIDA BUILDING CODE
DATE JUN 28 2001
BY Maurice Perez
PRODUCT CONTROL DIVISION
BUILDING CODE COMPLIANCE OFFICE
ACCEPTANCE NO. 01-0323.03

5/24/01
Robert L. Clark, P.E.
P.E. #39712
Structural

PGT INDUSTRIES

Revsd By:	Date:	Chkd By:	Date:	Revisions:	
Drawn By: P.J.P.		Date: 4/28/00			
Description: 2" HEAVY WALL MULLION & CLIP INSTALLATION DETAIL					

1070 TECHNOLOGY DRIVE NOKOMIS, FL 34275	P.O. BOX 1529 NOKOMIS, FL 34274	Series/Model: MULLS	Scale: 1x	Sheet: 2 of 5	Drawing No. 6623	Rev:

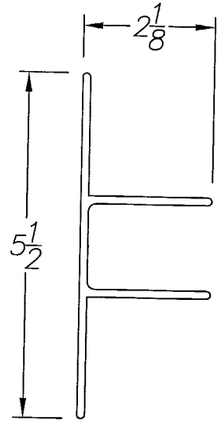

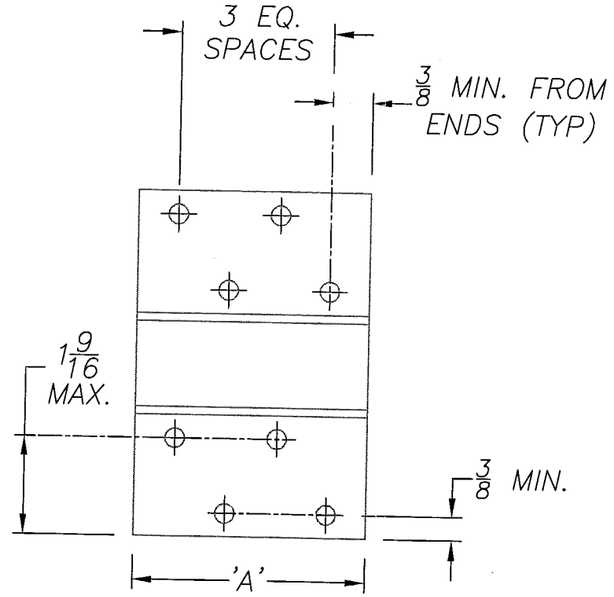

2" MULL CLIP
(8) ANCHOR LOCATIONS
EXTRUSION DWG # 513

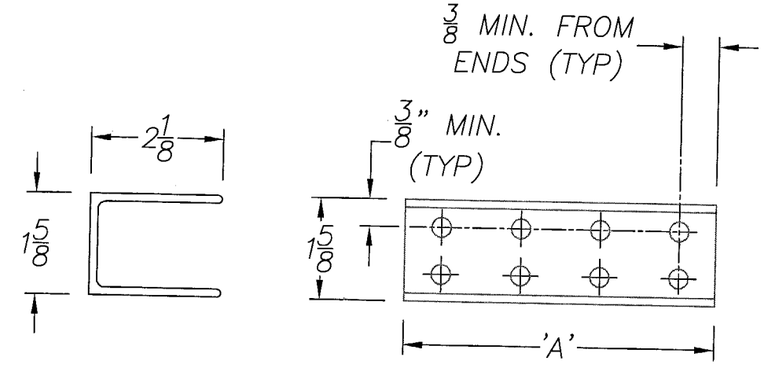

2" MULL CLIP W/TABS
REMOVED (8) ANCHOR LOCATIONS
EXTRUSION DWG # 513

IMPORTANT:
QUANTITY OF ANCHORS SHOWN ARE FOR A PICTORIAL REPRESENTATION ONLY. FOR CORRECT QUANTITY OF ANCHORS PLEASE REFER TO CHARTS AND FIND THE CORRECT MULL SIZE AND PRESSURE REQ'D FOR YOUR SPECIFIC APPLICATION.

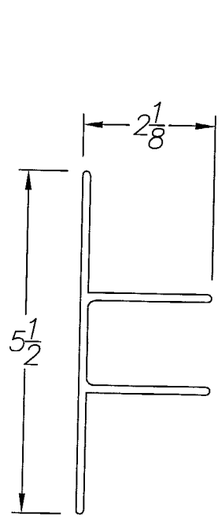

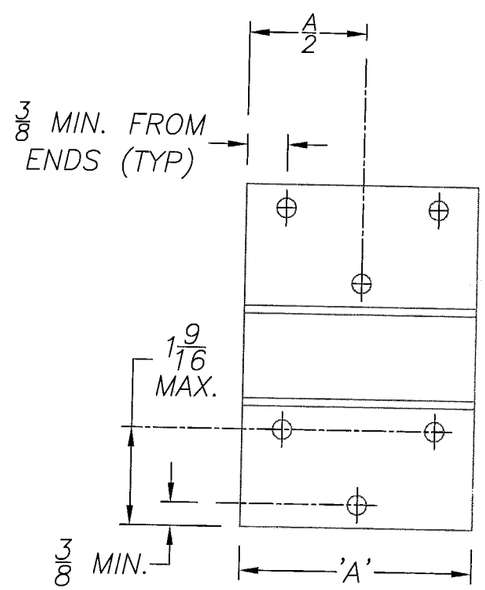

2" MULL CLIP
(6) ANCHOR LOCATIONS
EXTRUSION DWG # 513

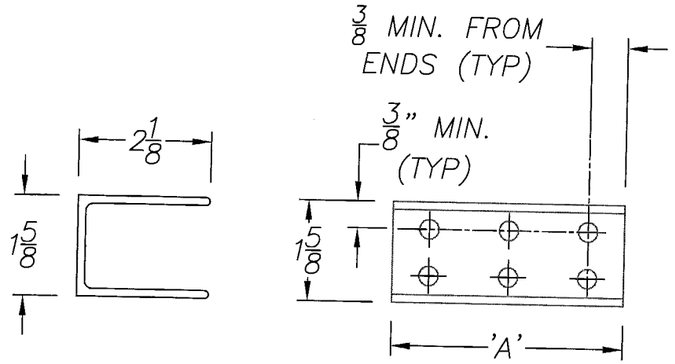

2" MULL CLIP W/TABS
REMOVED (6) ANCHOR LOCATIONS
EXTRUSION DWG # 513

CLIP LENGTH CHART FOR 2x MULL	
MULL SIZE	'A'
2 x 4 x $\frac{1}{4}$	$3\frac{7}{16}$
2 x 6 x $\frac{1}{4}$	$5\frac{7}{16}$

APPROVED AS COMPLYING WITH THE SOUTH FLORIDA BUILDING CODE
DATE JUN 28 2001
BY Manuel Perez
PRODUCT CONTROL DIVISION
BUILDING CODE COMPLIANCE OFFICE
ACCEPTANCE NO. 01-0323.03

5/24/01
RL CLARK
3972

PGT INDUSTRIES

Revsd By:	Date:	Chkd By:	Date:	Revisions:	
Drawn By: P.J.P.	Date: 4/28/01				

Description: ANCHOR LOCATIONS

Title: 2" HEAVY WALL MULLION

1070 TECHNOLOGY DRIVE NOKOMIS, FL 34275 — P.O. BOX 1529 NOKOMIS, FL 34274

Series/Model:	Scale:	Sheet:	Drawing No.	Rev:
MULLS	1x	3 of 5	6623	

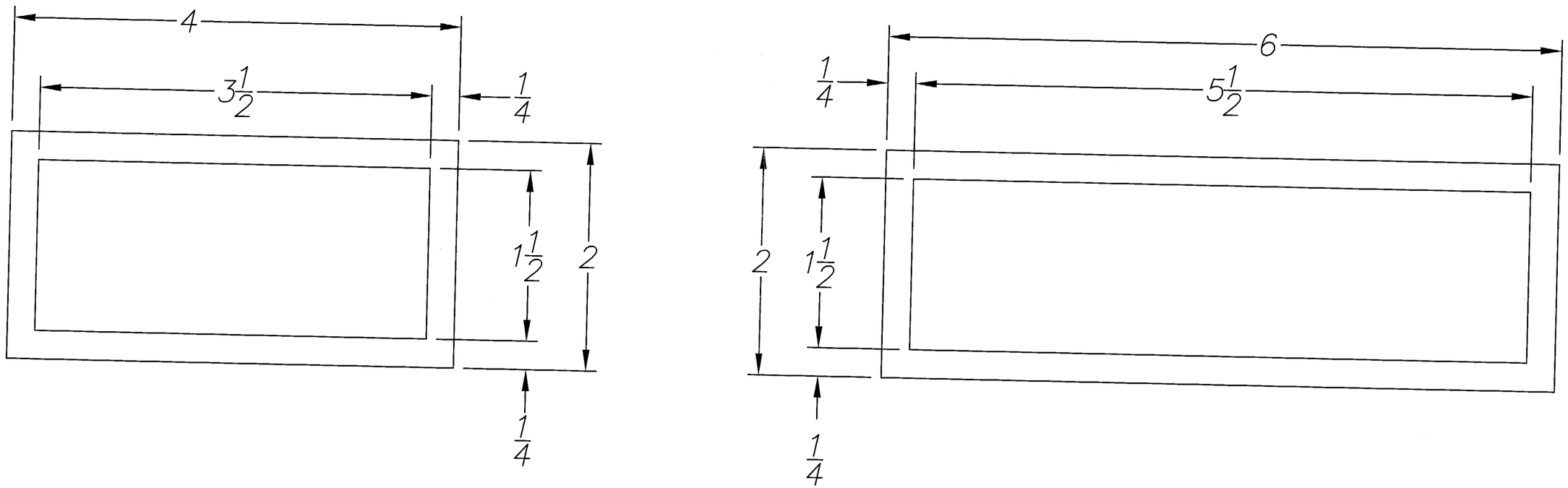

2x HEAVY WALL MULLS

MAT'L: 6063-T6

APPROVED AS COMPLYING WITH THE
SOUTH FLORIDA BUILDING CODE
DATE JUN 28 2001
BY Manuel Sevz
PRODUCT CONTROL DIVISION
BUILDING CODE COMPLIANCE OFFICE
ACCEPTANCE NO. 01-0323.03

5/24/01

Robert L. Clark, P.E.
P.E. #39712
Structural

PGT INDUSTRIES	Revsd By:	Date:	Chkd By:	Date:	Revisions:	
	Drawn By: P.J.P.		Date: 5/22/00			
	Description: 2" HEAVY WALL MULLION PROFILES					
1070 TECHNOLOGY DRIVE NOKOMIS, FL 34275	P.O. BOX 1529 NOKOMIS, FL 34274	Series/Model: MULLS	Scale: 1x	Sheet: 4 of 5	Drawing No. 6623	Rev:

2x4x1/4 6 Anchors	OPENING WIDTH IN INCHES									
MULL LENGTH IN INCHES	50	60	70	80	90	100	110	120	130	160
42	170	170	170	170	170	170	170	170	170	170
48	170	170	170	170	170	170	170	170	170	170
50.625	170	170	170	170	170	170	170	170	170	170
54	170	170	170	170	170	170	170	170	170	170
60	170	170	170	170	170	170	170	170	170	170
63	170	170	170	170	170	166	162	160	159	159
66	170	170	170	170	170	154	149	146	145	145
72	170	170	166	152	142	135	129	125	123	122
76	170	170	154	141	131	124	119	115	112	109
78	170	167	149	136	127	119	114	110	107	104
84	177	153	136	124	114	107	102	98	94	90
90	163	141	125	113	104	97	92	88	85	79
96	151	129	112	100	91	83	78	73	69	63
108	107	90	78	69	62	57	53	49	47	41
111	98	83	72	63	57	52	48	45	43	37
144	45	37	32	28	26	23	21	20	18	16

2x6x1/4 6/8 Anchors	OPENING WIDTH IN INCHES																			
MULL LENGTH IN INCHES	50		60		70		80		90		100		110		120		130		160	
42	170	170	170	170	170	170	170	170	170	170	170	170	170	170	170	170	170	170	170	170
48	170	170	170	170	170	170	170	170	170	170	170	170	170	170	170	170	170	170	170	170
50.625	170	170	170	170	170	170	170	170	170	170	170	170	170	170	170	170	170	170	170	170
54	170	170	170	170	170	170	170	170	170	170	170	170	170	170	170	170	170	170	170	170
60	170	170	170	170	170	170	170	170	170	170	170	170	170	170	170	170	170	170	170	170
63	170	170	170	170	170	170	170	170	170	170	170	170	170	170	170	170	170	170	170	170
66	170	170	170	170	170	170	170	170	170	170	168	170	162	170	159	170	158	170	158	170
72	170	170	170	170	170	170	165	170	154	170	146	170	140	170	136	170	134	170	133	170
76	170	170	170	170	168	170	154	170	143	170	135	170	129	170	125	166	122	162	119	159
78	170	170	170	170	162	170	148	170	138	170	130	170	124	165	119	159	116	155	113	151
84	170	170	166	170	148	170	134	170	124	166	117	155	111	148	106	142	103	137	98	130
90	170	170	153	170	136	170	123	164	113	151	106	141	100	133	96	127	92	123	86	116
96	165	170	142	170	125	167	113	151	104	139	97	129	91	123	87	115	83	109	77	98
108	144	170	123	163	109	141	98	125	89	112	83	102	78	95	73	88	70	83	63	73
111	140	170	119	154	105	133	94	118	86	106	80	97	75	89	71	83	67	78	61	68
144	105	108	89	90	78	78	69	69	61	61	56	56	51	51	47	47	44	44	37	37

Vertical Mull

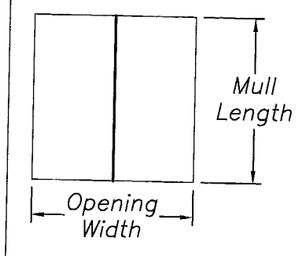

Horizontal Mull

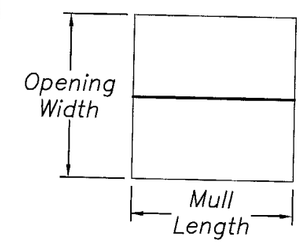

Multiple Mulled Units

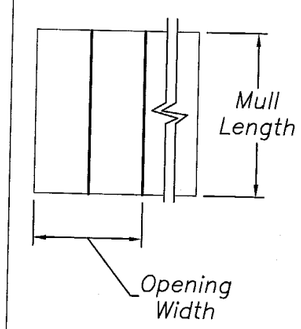

APPROVED AS COMPLYING WITH THE SOUTH FLORIDA BUILDING CODE
DATE JUN 28 2001
BY Manuel Perez
PRODUCT CONTROL DIVISION
BUILDING CODE COMPLIANCE OFFICE
ACCEPTANCE NO. 01-0323.03

NOTES:

1. MAXIMUM ALLOWABLE PRESSURE IN PSF.
2. DESIGN IS BASED ON OPENING WIDTH. FOR MULTIPLE UNITS, CONSIDER ONLY TWO ADJACENT UNITS AT A TIME. SEE SHEET 1.
3. REFERENCE TEST REPORT FTL-2902, 2903 AND 2975

R L Clark 5/4/01
RL Clark
39712
STRUCTURAL

PGT INDUSTRIES

Revsd By:	Date:	Chkd By:	Date:	Revisions:	
Drawn By: P.J.P.		Date: 4/28/00			

Description: PRESSURE CHARTS

Title: 2" HEAVY WALL MULLION PRESSURE CHARTS

1070 TECHNOLOGY DRIVE NOKOMIS, FL 34275	P.O. BOX 1529 NOKOMIS, FL 34274	Series/Model: MULLS	Scale: NTS	Sheet: 5 of 5	Drawing No. 6623	Rev: