MIAMI-DADE

BUILDING CODE COMPLIANCE OFFICE (BCCO)
PRODUCT CONTROL DIVISION

MIAMI-DADE COUNTY, FLORIDA
METRO-DADE FLAGLER BUILDING
140 WEST FLAGLER STREET, SUITE 1603
MIAMI, FLORIDA 33130-1563
(305) 375-2901 FAX (305) 375-2908

NOTICE OF ACCEPTANCE (NOA)

Ultimate Door of Palm Beach
2800 2nd Ave. North
Lake Worth, FL 33461

SCOPE:

This NOA is being issued under the applicable rules and regulations governing the use of construction materials. The documentation submitted has been reviewed by Miami-Dade County Product Control Division and accepted by the Board of Rules and Appeals (BORA) to be used in Miami Dade County and other areas where allowed by the Authority Having Jurisdiction (AHJ).

This NOA shall not be valid after the expiration date stated below. The Miami-Dade County Product Control Division (In Miami Dade County) and/or the AHJ (in areas other than Miami Dade County) reserve the right to have this product or material tested for quality assurance purposes. If this product or material fails to perform in the accepted manner, the manufacturer will incur the expense of such testing and the AHJ may immediately revoke, modify, or suspend the use of such product or material within their jurisdiction. BORA reserves the right to revoke this acceptance, if it is determined by Miami-Dade County Product Control Division that this product or material fails to meet the requirements of the applicable building code.
This product is approved as described herein, and has been designed to comply with the High Velocity Hurricane Zone of the Florida Building Code.

DESCRIPTION: Outswing French Doors

APPROVAL DOCUMENT: Drawing No 1004A, titled "Outswing French Doors," Sheets 1 through 8 of 8, prepared by W. W. Schaefer Engineering & Consulting, P.A., dated 2/24/00 with revision dated 3/19/01, signed and sealed by Warren W. Schaefer, P.E., bearing the Miami-Dade County Product Control approval stamp with the Notice of Acceptance number and approval date by the Miami-Dade County Product Control Division.

MISSILE IMPACT RATING: Large and Small Missile Impact Resistant

LABELING: Each unit shall bear a permanent label with the manufacturer's name or logo, city, state and following statement: "Miami-Dade County Product Control Approved", unless otherwise noted herein.

RENEWAL of this NOA shall be considered after a renewal application has been filed and there has been no change in the applicable building code negatively affecting the performance of this product.

TERMINATION of this NOA will occur after the expiration date or if there has been a revision or change in the materials, use, and/or manufacture of the product or process. Misuse of this NOA as an endorsement of any product, for sales, advertising or any other purposes shall automatically terminate this NOA. Failure to comply with any section of this NOA shall be cause for termination and removal of NOA.

ADVERTISEMENT: The NOA number preceded by the words Miami-Dade County, Florida, and followed by the expiration date may be displayed in advertising literature. If any portion of the NOA is displayed, then it shall be done in its entirety.

INSPECTION: A copy of this entire NOA shall be provided to the user by the manufacturer or its distributors and shall be available for inspection at the job site at the request of the Building Official.

This NOA consists of this page 1 as well as approval document mentioned above.
The submitted documentation was reviewed by Jaime Eisen.

PRODUCT CONTROL ACCEPTED

NOTICE OF ACCEPTANCE: EVIDENCE SUBMITTED

(For File ONLY. Not part of NOA)

A. DRAWINGS

1. Manufacturer's die drawings and sections.
2. Drawing No. 1004A, Sheets 1 through 8 of 8, titled "Outswing French Doors," prepared by W. W. Schaefer Engineering & Consulting, P.A., dated 2/24/00 with revision dated 3/19/01, signed and sealed by Warren W. Schaefer, P.E.

B. TESTS

1. Test reports on: 1) Air Infiltration Test, per PA 202-94
   2) Uniform Load Static Air Pressure Test, per PA 202-94
   3) Water Resistance Test, per PA 202-94

   along with installation diagram of an out-swinging wood clad aluminum French door prepared by Hurricane Test Laboratory, Inc., Test Report No. **HTL-0026-1008-94**, dated 11/14/94, signed and sealed by Timothy Marshall, P.E.
2. Test reports on 1) Large Missile Impact Test, SFBC PA 201-94
   2) Cyclic Loading Test, per SFBC PA 203-94

   along with installation diagram of an out-swinging wood clad aluminum French door, prepared by Hurricane Test Laboratory, Inc., Test Report No. **HTL-0026-1023-95**, dated 1/23/95, signed and sealed by Timothy Marshall, P.E.
3. Test reports on 1) Large Missile Impact Test, SFBC PA 201-94
   2) Cyclic Loading Test, per SFBC PA 203-94

   along with installation diagram of an out-swinging wood clad aluminum French door, prepared by Hurricane Test Laboratory, Inc., Test Report No. **HTL-0026-0508-95**, dated 5/12/95, signed and sealed by Timothy Marshall, P.E.
4. Test reports on 1) Large Missile Impact Test, SFBC PA 201-94

   along with installation diagram of an out-swinging wood clad aluminum French door, prepared by Hurricane Test Laboratory, Inc., Test Report No. **HTL-0026-0508-95**, dated 5/12/95, signed and sealed by Timothy Marshall, P.E.
5. Test reports on: 1) Air Infiltration Test, per PA 202-94
   2) Uniform Load Static Air Pressure Test, per PA 202-94
   3) Water Resistance Test, per PA 202-94
   4) Forced Entry Test, per SFBC 3603.2 (b) and PA 202-94

   along with installation diagram of an out-swinging wood clad aluminum French door prepared by Hurricane Test Laboratory, Inc., Test Report No. **HTL-0026-1017-99**, dated 10/22/99, signed and sealed by Timothy Marshall, P.E.

NOTICE OF ACCEPTANCE: EVIDENCE SUBMITTED

(For File ONLY. Not part of NOA.)

6. Test reports on 1) Large Missile Impact Test, SFBC PA 201-94
along with installation diagram of an out-swinging wood clad aluminum French door, prepared by Hurricane Test Laboratory, Inc., Test Report No. **HTL-0026-0123-95**, dated 1/23/95, signed and sealed by Timothy Marshall, P.E.
7. Test reports on 1) Forced Entry Test, per SFBC 3603.2 (b) and PA 202-94
along with installation diagram of an out-swinging wood clad aluminum French door, prepared by Hurricane Test Laboratory, Inc., Test Report No. **HTL-0026-1104-95**, dated 11/13/95, signed and sealed by Timothy Marshall, P.E.
8. Test reports on 1) Uniform Load Static Air Pressure Test, per PA 202-94
along with installation diagram of an out-swinging wood clad aluminum French door, prepared by Hurricane Test Laboratory, Inc., Test Report No. **HTL-0026-1105-95**, dated 11/13/95, signed and sealed by Timothy Marshall, P.E.

Tests performed under Approval No. 00-0912.03

9. Test reports on 1) Large Missile Impact Test, SFBC PA 201-94
2) Cyclic Loading Test, per SFBC PA 203-94
along with installation diagram of an out-swinging wood clad aluminum French door, prepared by Hurricane Test Laboratory, Inc., Test Report No. **HTL-0026-1212-99**, dated 12/08/99, signed and sealed by Vinu J. Abraham, P.E.
10. Test reports on: 1) Air Infiltration Test, per PA 202-94
2) Uniform Load Static Air Pressure Test, per PA 202-94
3) Water Resistance Test, per PA 202-94
along with installation diagram of an out-swinging wood clad aluminum French door, prepared by Hurricane Test Laboratory, Inc., Test Report No. **HTL-0026-1212-99**, dated 12/08/99, signed and sealed by Vinu J. Abraham, P.E.

Tests performed under Approval No. 97-0921.01

11. Test reports on 1) Large Missile Impact Test, SFBC PA 201-94
2) Cyclic Loading Test, per SFBC PA 203-94
along with installation diagram of an out-swinging wood clad aluminum French door, prepared by Hurricane Test Laboratory, Inc., Test Report No. **HTL-0026-0913-96**, dated 06/26/97 and 09/23/96, signed and sealed by Timothy Marshall, P.E. and Fredrick D. Shaffer, P.E.
12. Test reports on 1) Forced-Entry Resistance Test, per SFBC 3603.2 (b) and PA 202-94.
along with installation diagram of an out-swinging wood clad aluminum French door, prepared by Hurricane Test Laboratory, Inc., Test Report No. **HTL-0026-0501-96**, dated 05/10/96, signed and sealed by Timothy Marshall, P.E.

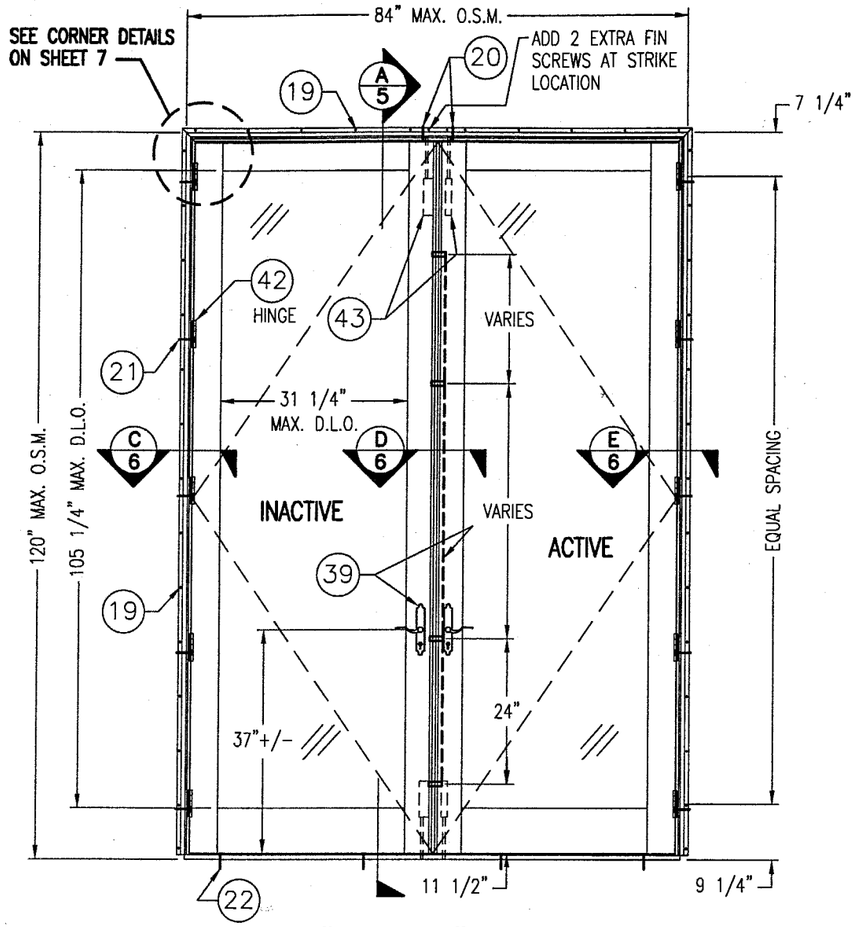

84" X 120" DOUBLE RECTANGULAR FRENCH DOOR

SCALE:1/2"=1'-0"

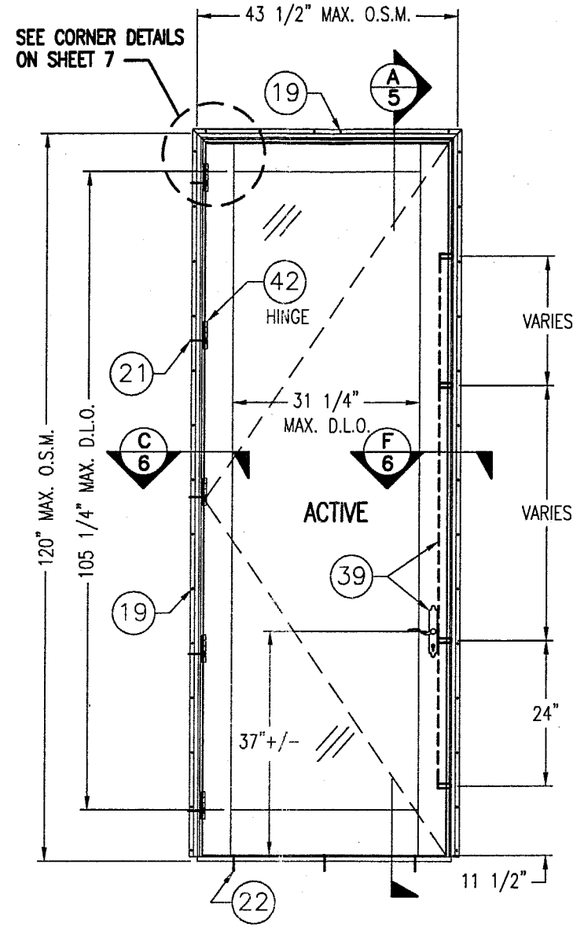

43 1/2" X 120" SINGLE RECTANGULAR FRENCH DOOR

SCALE:1/2"=1'-0"

ALL ELEVATIONS VIEWED FROM EXTERIOR

ALLOWABLE DESIGN PRESSURE

DOOR SIZE	DESIGN PRESSURE		FOOT NOTE
	P1	P2	
84" X 120"	58 PSF	65 PSF	1, 4
43 1/2" X 120"	58 PSF	65 PSF	1,4
75 1/8" X 96"	70 PSF	70 PSF	2, 3, 4
39" X 96"	70 PSF	70 PSF	2, 3, 4

P1 = PRESSURE WHEN USING 3/8" LAMINATED ANNEALED GLASS.
P2 = PRESSURE WHEN USING 1/2" LAMINATED TEMPERED GLASS.

LOAD TABLE FOOT NOTES:

1. P1 MAY BE INCREASED TO 65 PSF IF THE DAYLIGHT OPENING IS EQUAL TO OR SMALLER THAN 20 SF.
2. 70 PSF PRESSURE IS ONLY APPLICABLE WHEN PARTS 5, 48, 49 & 50 ARE USED WITH THE DOORS. OTHERWISE, THE ALLOWABLE PRESSURE MUST BE REDUCED TO 65 PSF.
3. ALLOWABLE PRESSURE FOR FIXED PANELS MAY NOT EXCEED 65 PSF.
4. LISTED PRESSURE IS FOR BOTH POSITIVE & NEGATIVE DIRECTIONS.

HINGE TABLE

DOOR HEIGHT	NO. HINGES REQUIRED
120"	5 PER PANEL
96" & SMALLER	4 PER PANEL

NOTE: ONLY 4 HINGES REQUIRED PER PANEL AT ALL RADIUS TOP DOORS

O.S.M. = OUTSIDE MEASUREMENT

GENERAL NOTES

1. THESE DOOR SYSTEMS HAVE BEEN TESTED, ANALYZED AND APPROVED FOR DESIGN PRESSURES SHOWN ON THESE DRAWINGS.
2. BUCKING, OPENINGS & BUCKING FASTENERS MUST BE DESIGNED & INSTALLED TO WITHSTAND WIND LOADS AS DETERMINED FOR EA. APPLICATION
3. BUCKING FASTENERS MAY NOT EXCEED 16" O.C. SPACING AROUND OPENINGS REGARDLESS OF CIRCUMSTANCE.
4. ALL HARDWARE & FASTENERS SHALL BE IN ACCORDANCE WITH THESE DRAWINGS & MAY NOT VARY UNLESS SPECIFICALLY MENTIONED ON THE DRAWINGS.
5. THE DETAILS & SPECIFICATIONS SHOWN HEREIN REPRESENT THE PRODUCTS PROPOSED FOR WATER, AIR, IMPACT, CYCLIC & UNIFORM STATIC AIR PRESSURE TESTING IN CONFORMANCE WITH DADE COUNTY PROTOCOLS PA 201, 202 & 203 FOR IMPACT DOORS.
6. ALL JAMB TO BUCKING SHEAR FASTENERS MUST PENETRATE BUCK A MINIMUM OF 1 1/4". IF PENETRATION IS LESS THAN 1 1/4" THEN SCREW LENGTH SHALL INCREASE AS REQUIRED.
7. THESE DOOR SYSTEMS HAVE BEEN DESIGNED IN ACCORDANCE WITH THE SOUTH FLORIDA BUILDING CODE, 1994 EDITION.
8. THIS PRODUCT HAS BEEN TESTED IN ACCORDANCE WITH DADE COUNTY PROTOCOLS PA-201, PA-202 & PA--203 FOR LARGE MISSILE IMPACT, STRUCTURAL & CYCLIC TESTING.

APPROVED AS COMPLYING WITH THE SOUTH FLORIDA BUILDING CODE
DATE 3/07/2002
BY
PRODUCT CONTROL DIVISION
BUILDING CODE COMPLIANCE OFFICE
ACCEPTANCE NO. 01-0327.01

DRAWN BY: W.W.S.	DATE: 02/24/00
CHECKED BY: W.W.S.	DATE: 02/24/00

PLOT: 1=24

NO.	REVISION DESCRIPTION	BY	DATE
A1	CHANGED SHEET #	WWS	3/19/01

(DADE)

DRAWING TITLE: OUTSWING FRENCH DOORS

MANUFACTURER: ULTIMATE DOOR OF PALM BEACH, INC.
2800 2ND AVE. NORTH
LAKE WORTH, FL 33461
561-642-2828

CONSULTANTS: W. W. SCHAEFER ENGINEERING & CONSULTING, P.A.
600 SANDTREE DRIVE: SUITE 203B
PALM BEACH GARDENS, FL 33403
PHONE: 561-775-4902 FAX: 561-775-4903

CERTIFICATION
MAR 20 2001
WARREN W. SCHAEFER, P.E.
P.E. NO. 44135

DRAWING NO. 1004A
REV.
SHEET NO. 1 OF 8

01-0327-01

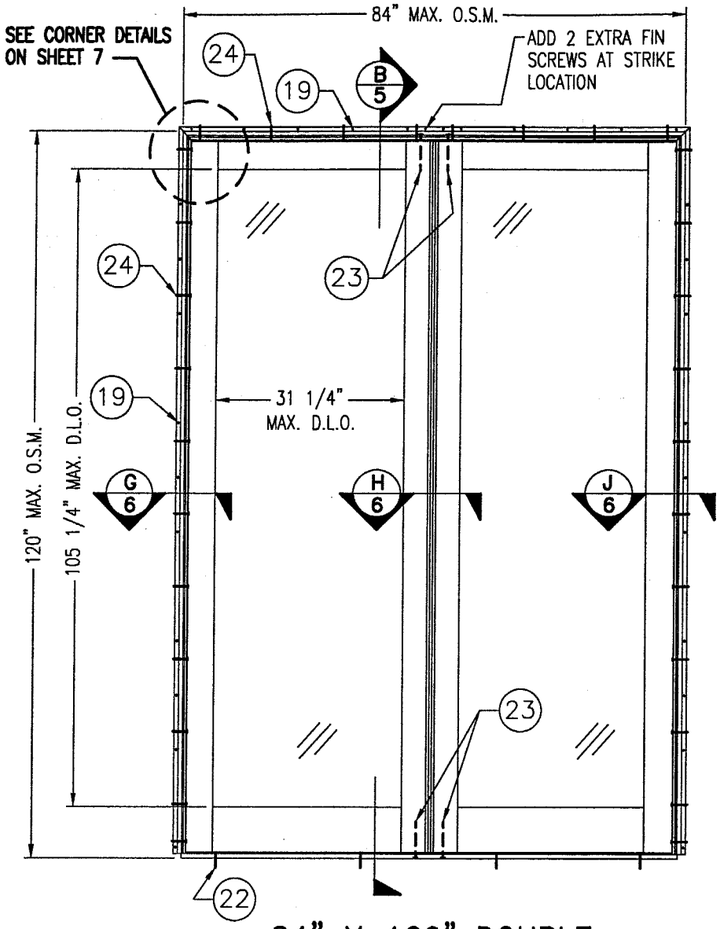

84" X 120" DOUBLE RECTANGULAR FIXED PANELS

SCALE:1/2"=1'-0"

NOTE: FIXED PANELS MAY BE RADIUS TOP BUT LIMITED TO 72" WIDE

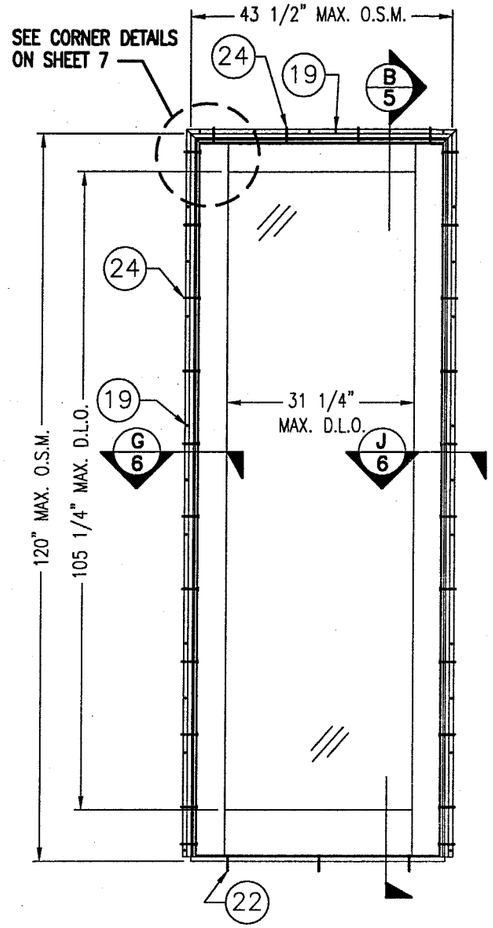

43 1/2" X 120" SINGLE RECTANGULAR FIXED PANEL

SCALE:1/2"=1'-0"

NOTE: FIXED PANELS MAY BE RADIUS TOP

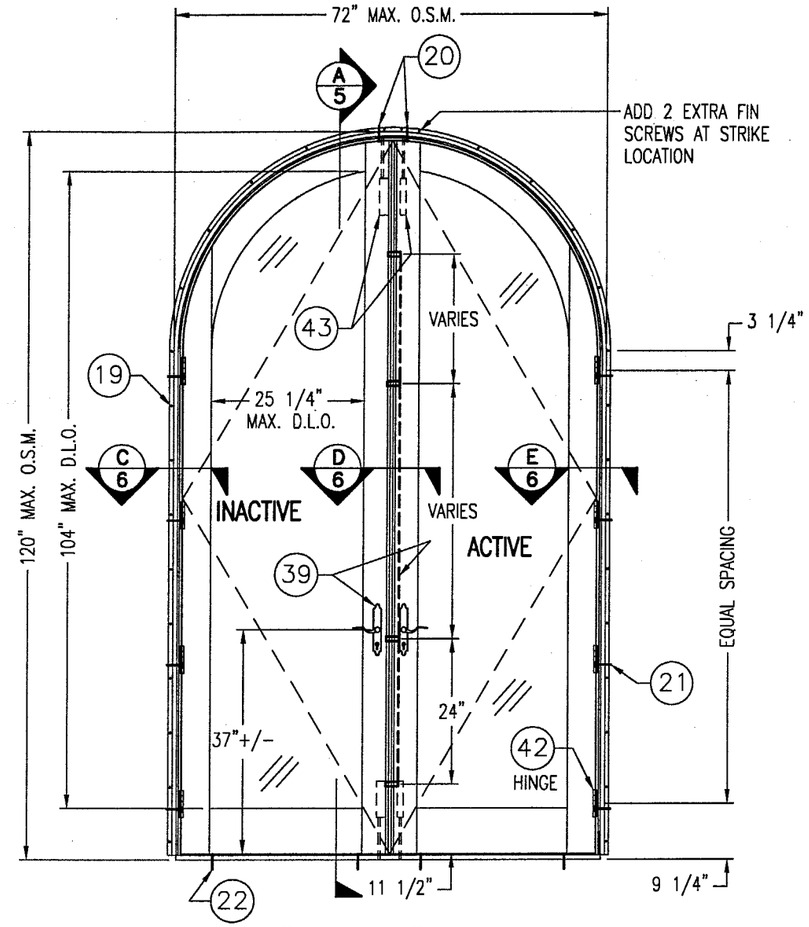

72" X 120" DOUBLE QUARTER-ROUND FRENCH DOOR

SCALE:1/2"=1'-0"

NOTE: HALF ROUND & PARTIAL SEGMENTAL TOP DOORS ARE ALSO ACCEPTABLE.

72" IS MAX. ALLOWABLE WIDTH FOR SHAPED TOP DOUBLE DOORS.

ALL ELEVATIONS VIEWED FROM EXTERIOR

O.S.M. = OUTSIDE MEASUREMENT

FOR DESIGN LOADS & HINGE REQUIREMENTS, SEE SHEET 1

APPROVED AS COMPLYING WITH THE SOUTH FLORIDA BUILDING CODE
DATE 03/07/2002
BY
PRODUCT CONTROL DIVISION
BUILDING CODE COMPLIANCE OFFICE
ACCEPTANCE NO. 01-0327.01

DRAWN BY: W.W.S.	DATE: 02/24/00
CHECKED BY: W.W.S.	DATE: 02/24/00

PLOT: 1=24

NO.	REVISION DESCRIPTION	BY	DATE
A1	CHANGED SHEET #	WWS	3/19/01

DRAWING TITLE: OUTSWING FRENCH DOORS (DADE)

MANUFACTURER: ULTIMATE DOOR OF PALM BEACH, INC.
2800 2ND AVE. NORTH
LAKE WORTH, FL 33461
561-642-2828

CONSULTANTS: W. W. SCHAEFER ENGINEERING & CONSULTING, P.A.
600 SANDTREE DRIVE; SUITE 203B
PALM BEACH GARDENS, FL 33403
PHONE: 561-775-4902 FAX: 561-775-4903

CERTIFICATION: MAR 20 2001
WARREN W. SCHAEFER, P.E.
P.E. NO. 44135

DRAWING NO. 1004A REV.

SHEET NO. 2 OF 8

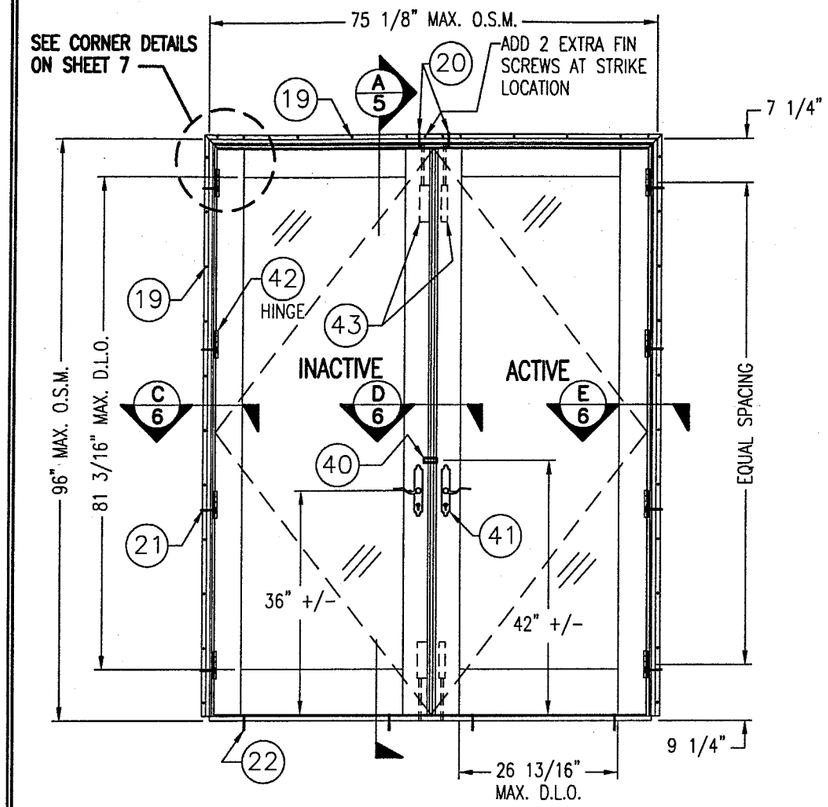

75 1/8" X 96" DOUBLE RECTANGULAR FRENCH DOOR

SCALE:1/2"=1'-0"

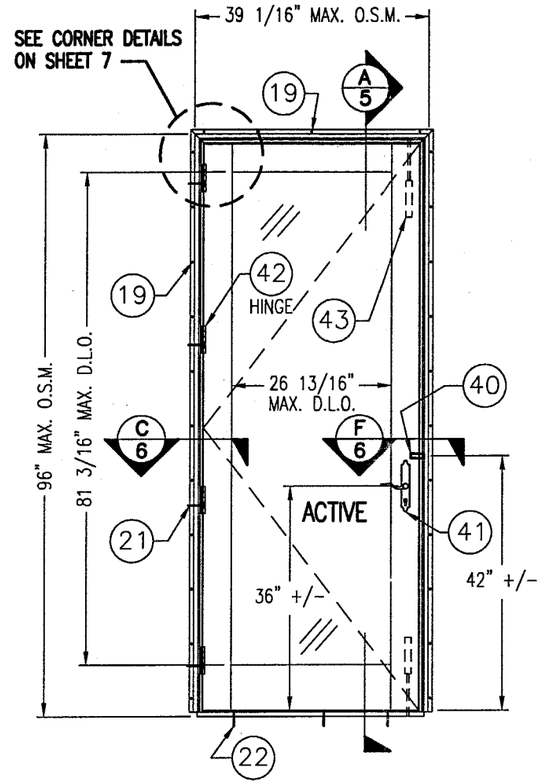

39 1/16" X 96" SINGLE RECTANGULAR FRENCH DOOR

SCALE:1/2"=1'-0"

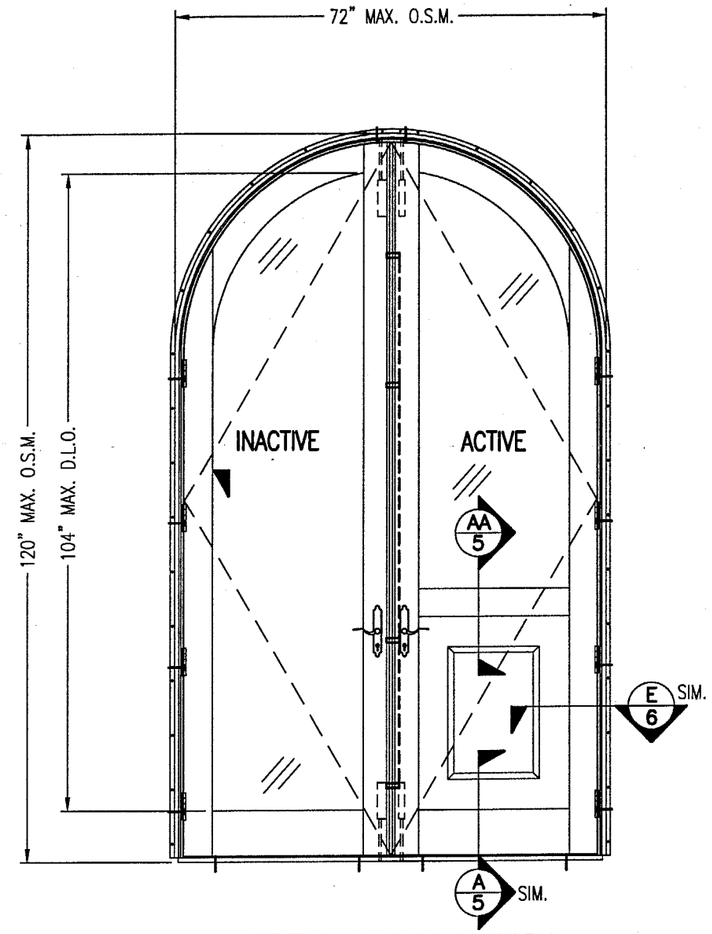

FRENCH DOOR WITH RAISED PANEL

SCALE:1/2"=1'-0"

ALLOWABLE WITH ALL DOORS

ALL ELEVATIONS VIEWED FROM EXTERIOR

O.S.M. = OUTSIDE MEASUREMENT

FOR DESIGN LOADS & HINGE REQUIREMENTS, SEE SHEET 1

APPROVED AS COMPLYING WITH THE SOUTH FLORIDA BUILDING CODE
DATE 03/07/2002
BY
PRODUCT CONTROL DIVISION
BUILDING CODE COMPLIANCE OFFICE
ACCEPTANCE NO. 01-0327.01

DRAWN BY: W.W.S.	DATE: 02/24/00
CHECKED BY: W.W.S.	DATE: 02/24/00

PLOT: 1=24

NO.	REVISION DESCRIPTION	BY	DATE
A1	CHANGED SHEET #	WWS	3/19/01

DRAWING TITLE: OUTSWING FRENCH DOORS (DADE)

MANUFACTURER: ULTIMATE DOOR OF PALM BEACH, INC.
2800 2ND AVE. NORTH
LAKE WORTH, FL 33461
561-642-2828

CONSULTANTS: W. W. SCHAEFER ENGINEERING & CONSULTING, P.A.
600 SANDTREE DRIVE; SUITE 203B
PALM BEACH GARDENS, FL 33403
PHONE: 561-775-4902 FAX: 561-775-4903

CERTIFICATION
MAR 20 2001
WARREN W. SCHAEFER, P.E.
P.E. NO. 44135

DRAWING NO. 1004A
REV.
SHEET NO. 3 OF 8

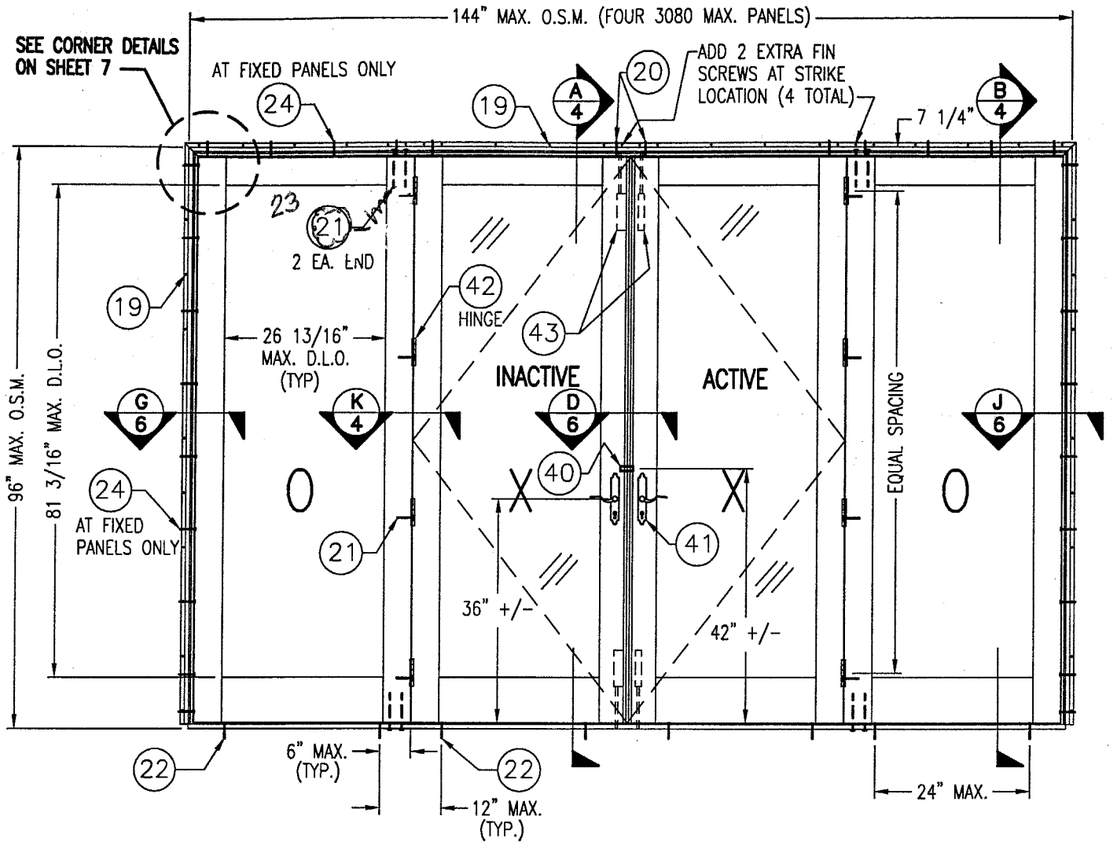

QUAD DOOR/FIXED PANEL UNIT WITH MAX. 3080 PANELS

SCALE:1/2"=1'-0"

ALLOWABLE DESIGN LOADS = +48/-59 PSF FOR THIS UNIT

ALL ELEVATIONS VIEWED FROM EXTERIOR

O.S.M. = OUTSIDE MEASUREMENT

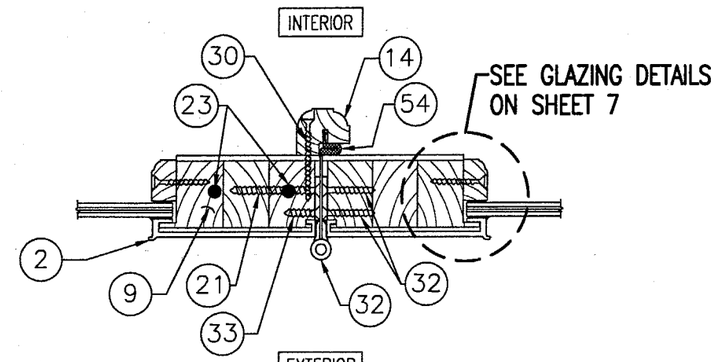

SECTION K/4

SCALE: 3"=1'-0"

APPROVED AS COMPLYING WITH THE SOUTH FLORIDA BUILDING CODE
DATE 03/07/2002
BY
PRODUCT CONTROL DIVISION
BUILDING CODE COMPLIANCE OFFICE
ACCEPTANCE NO. 01-0327-01

DRAWN BY: W.W.S.	DATE: 02/24/00
CHECKED BY: W.W.S.	DATE: 02/24/00

PLOT: 1=24

NO.	REVISION DESCRIPTION	BY	DATE
A2	ADDED THIS SHEET	WWS	3/19/01

DRAWING TITLE: OUTSWING FRENCH DOORS (DADE)

MANUFACTURER: ULTIMATE DOOR OF PALM BEACH, INC.
2800 2ND AVE. NORTH
LAKE WORTH, FL 33461
561-642-2828

CONSULTANTS
W. W. SCHAEFER ENGINEERING & CONSULTING, P.A.
600 SANDTREE DRIVE; SUITE 203B
PALM BEACH GARDENS, FL 33403
PHONE: 561-775-4902 FAX: 561-775-4903

CERTIFICATION
MAR 20 2001
WARREN W. SCHAEFER, P.E.
P.E. NO. 44135

DRAWING NO. 1004A | REV.

SHEET NO. 4 OF 8

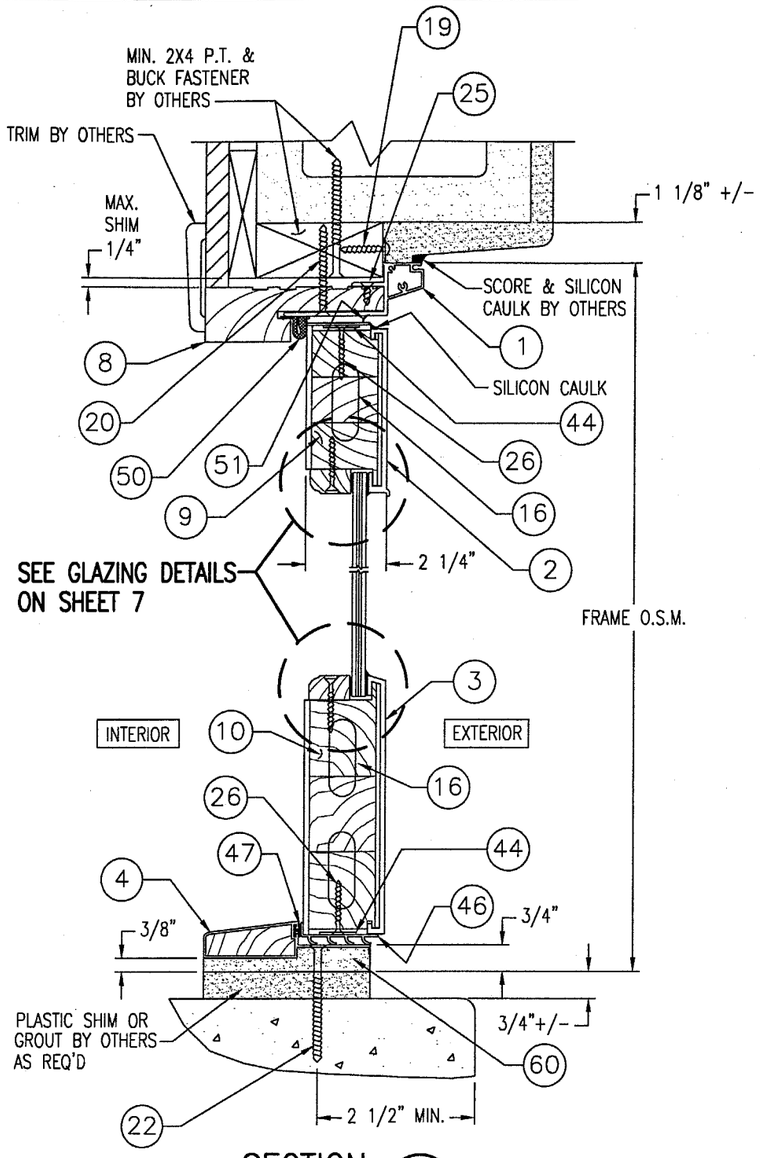

SECTION A/5 OPERABLE DOORS
SCALE: 3"=1'-0"

SEE "OPTIONAL THRESHOLD DETAIL" ON THIS SHEET FOR 2ND TYPE OF THRESHOLD & SEALS.

SEE "GLAZING DETAIL 2" ON SHEET 7 FOR 2ND TYPE OF GLAZING STOP

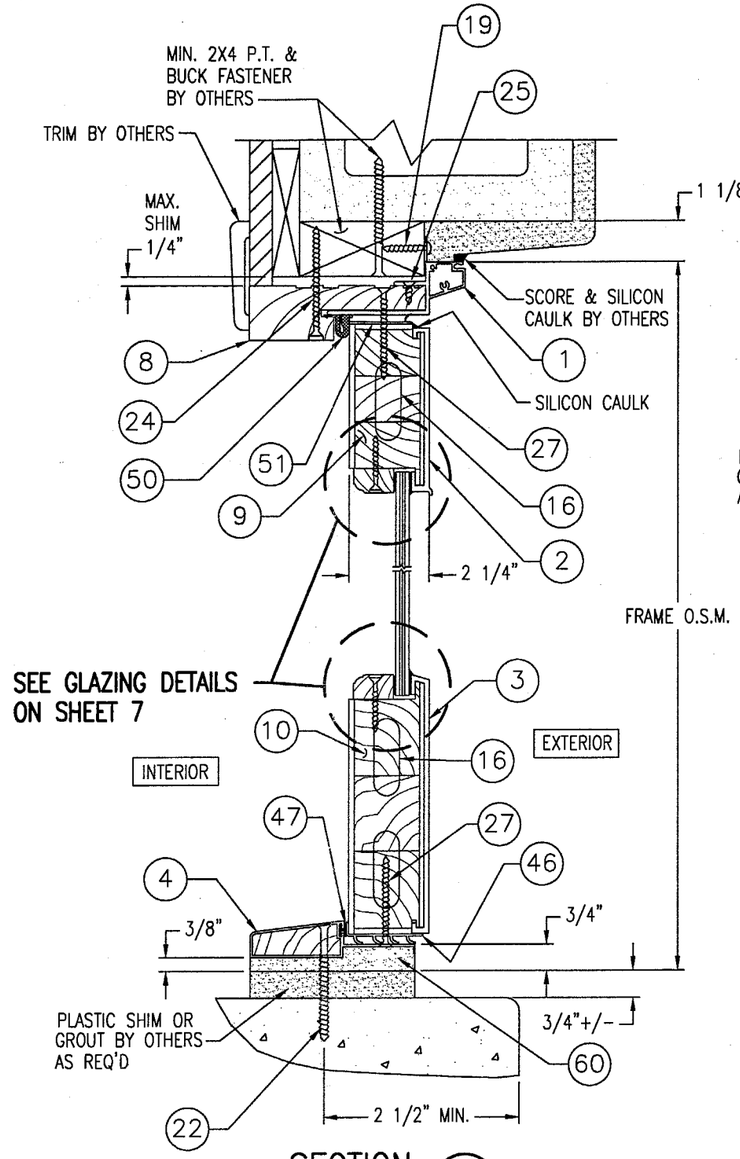

SECTION B/5 FIXED DOORS
SCALE: 3"=1'-0"

SEE "OPTIONAL THRESHOLD DETAIL" ON THIS SHEET FOR 2ND TYPE OF THRESHOLD & SEALS.

SEE "GLAZING DETAIL 2" ON SHEET 7 FOR 2ND TYPE OF GLAZING STOP

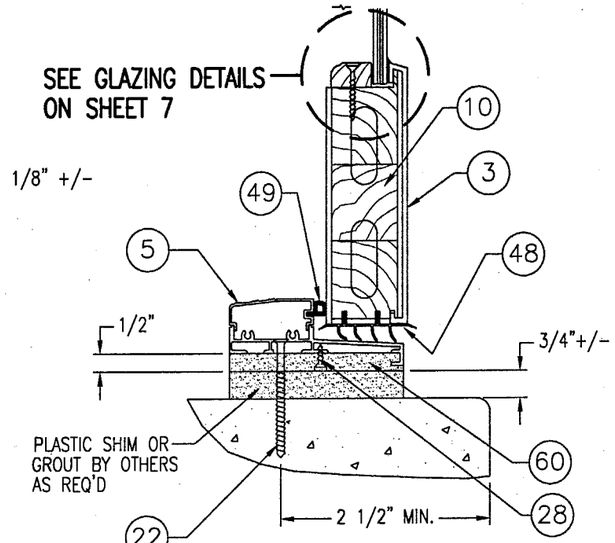

OPTIONAL THRESHOLD DETAIL

NOTE: SUB-THRESHOLD IS SILICONED TO ALUMINUM THRESHOLD

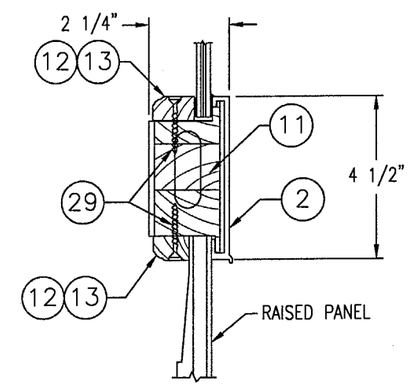

SECTION AA/5
SCALE: 3"=1'-0"

APPROVED AS COMPLYING WITH THE SOUTH FLORIDA BUILDING CODE
DATE 03/07/2002
BY
PRODUCT CONTROL DIVISION
BUILDING CODE COMPLIANCE OFFICE
ACCEPTANCE NO. 01-0327.01

DRAWN BY: W.W.S.	DATE: 02/24/00
CHECKED BY: W.W.S.	DATE: 02/24/00

PLOT: 1=4

NO.	REVISION DESCRIPTION	BY	DATE
A1	CHANGED SHEET #	WWS	3/19/01

DRAWING TITLE: OUTSWING FRENCH DOORS (DADE)

MANUFACTURER: ULTIMATE DOOR OF PALM BEACH, INC.
2800 2ND AVE. NORTH
LAKE WORTH, FL 33461
561-642-2828

CONSULTANTS: W. W. SCHAEFER ENGINEERING & CONSULTING, P.A.
600 SANDTREE DRIVE; SUITE 203B
PALM BEACH GARDENS, FL 33403
PHONE: 561-775-4902 FAX: 561-775-4903

CERTIFICATION
MAR 20 2001
WARREN W. SCHAEFER, P.E.
P.E. NO. 44135

DRAWING NO. 1004A
REV.
SHEET NO. 5 OF 8

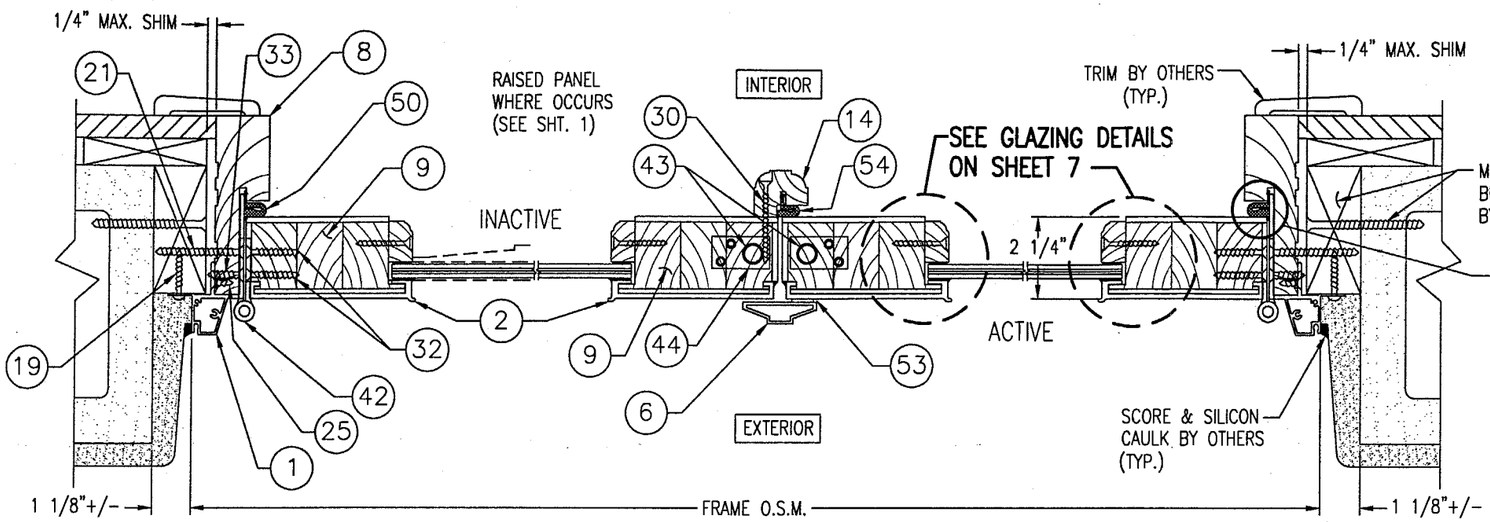

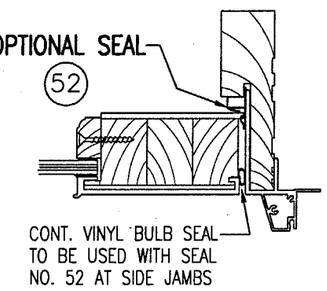

SECTION C/6
SCALE: 3"=1'-0"

SEE "OPTIONAL STILE/GLAZING DETAIL" ON SHEET 7 FOR 2ND TYPE OF STILE &. GLAZING STOP

SECTION D/6
SCALE: 3"=1'-0"

OPERABLE DOORS

SECTION E/6
SCALE: 3"=1'-0"

SEE "OPTIONAL STILE/GLAZING DETAIL" ON SHEET 7 FOR 2ND TYPE OF STILE &. GLAZING STOP

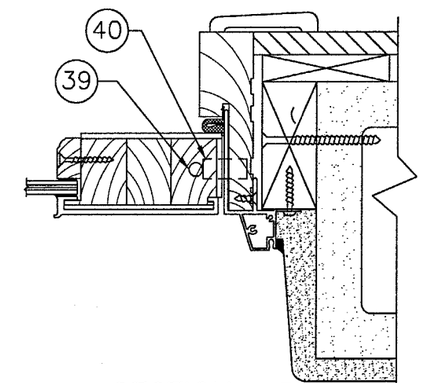

SECTION F/6
SCALE: 3"=1'-0"

SEE SECTION E/5 ON THIS SHEET FOR DETAIL NOT SHOWN.

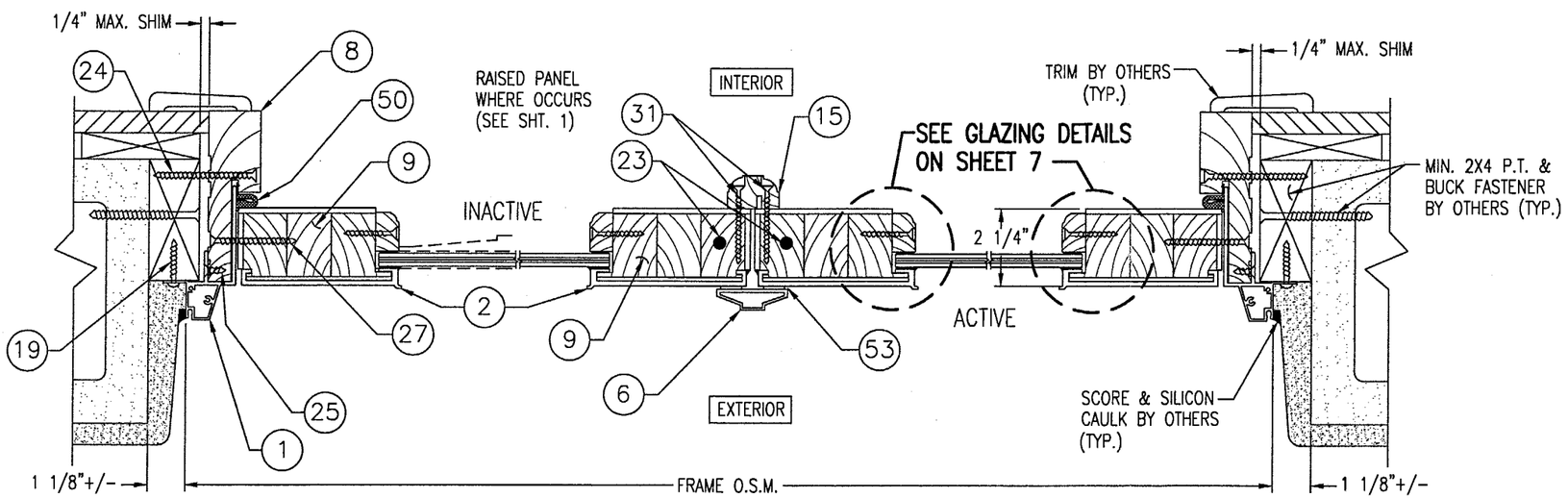

SECTION G/6
SCALE: 3"=1'-0"

SEE "OPTIONAL STILE/GLAZING DETAIL" ON SHEET 7 FOR 2ND TYPE OF STILE &. GLAZING STOP

SECTION H/6
SCALE: 3"=1'-0"

FIXED DOORS

SECTION J/6
SCALE: 3"=1'-0"

SEE "OPTIONAL STILE/GLAZING DETAIL" ON SHEET 7 FOR 2ND TYPE OF STILE &. GLAZING STOP

APPROVED AS COMPLYING WITH THE
SOUTH FLORIDA BUILDING CODE
DATE 3/07/2002
BY
PRODUCT CONTROL DIVISION
BUILDING CODE COMPLIANCE OFFICE
ACCEPTANCE NO. 01-0327.01

DRAWN BY: W.W.S.	DATE: 02/24/00
CHECKED BY: W.W.S.	DATE: 02/24/00

PLOT: 1=4

NO.	REVISION DESCRIPTION	BY	DATE
A1	CHANGED SHEET #	WWS	3/19/01

(DADE)

DRAWING TITLE
OUTSWING FRENCH DOORS

MANUFACTURER
ULTIMATE DOOR OF PALM BEACH, INC.
2800 2ND AVE. NORTH
LAKE WORTH, FL 33461
561-642-2828

CONSULTANTS
W. W. SCHAEFER ENGINEERING & CONSULTING, P.A.
600 SANDTREE DRIVE, SUITE 203B
PALM BEACH GARDENS, FL 33403
PHONE: 561-775-4902 FAX: 561-775-4903

CERTIFICATION
MAR 20 2001
WARREN W. SCHAEFER, P.E.
P.E. NO. 44135

DRAWING NO. 1004A
REV.

SHEET NO. 6 OF 8

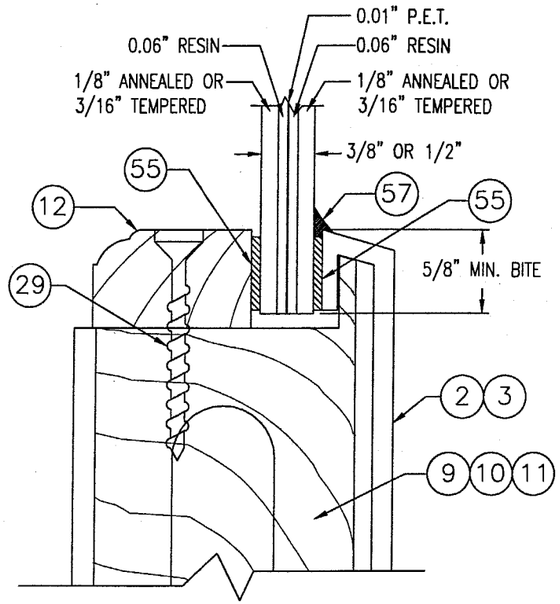

GLAZING DETAIL 1

NEBULA SAFETY-PLUS LAMINATED GLASS
(THIS DETAIL MAY BE USED WITH ALL DOOR SIZES)
SCALE: FULL SIZE

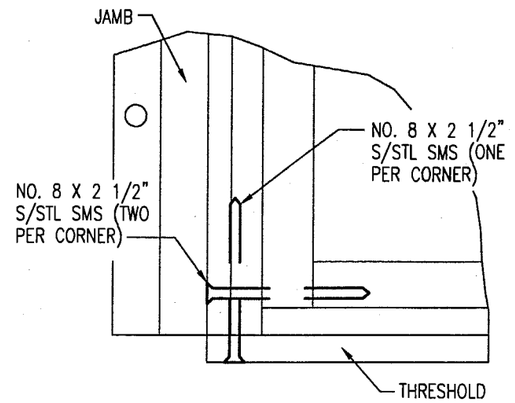

JAMB TO THRESHOLD CORNER

SCALE: N.T.S.
CORNER IS ALSO GLUED

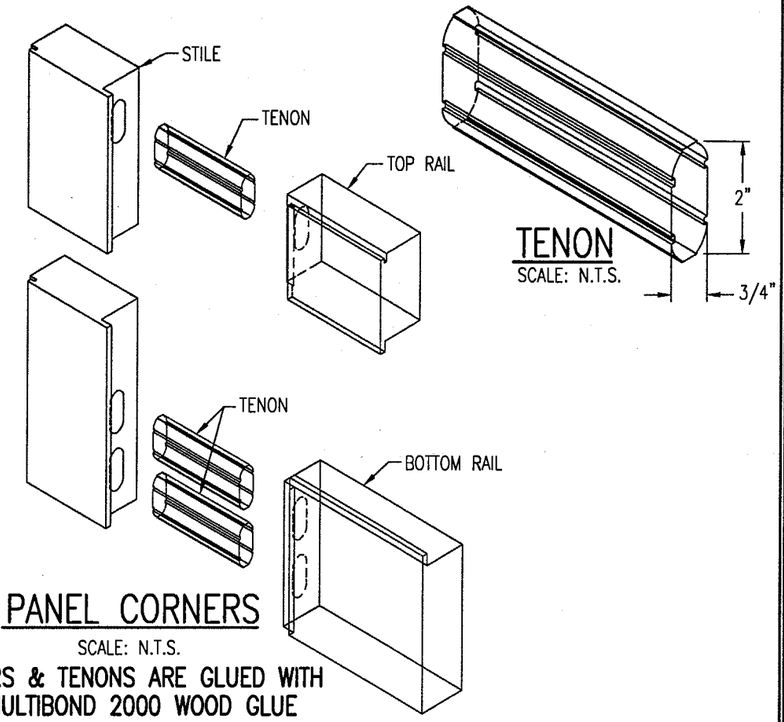

TENON

SCALE: N.T.S.

PANEL CORNERS

SCALE: N.T.S.
CORNERS & TENONS ARE GLUED WITH MULTIBOND 2000 WOOD GLUE

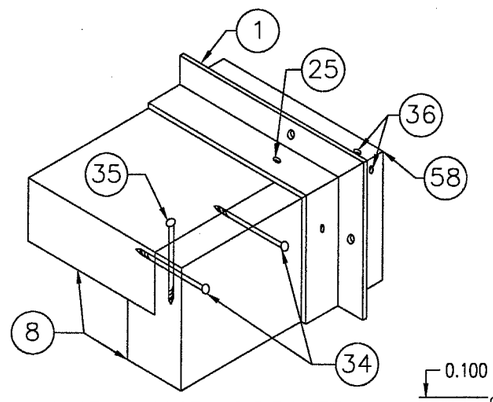

JAMB-JAMB CORNER

SCALE: N.T.S.
CORNER IS ALSO GLUED

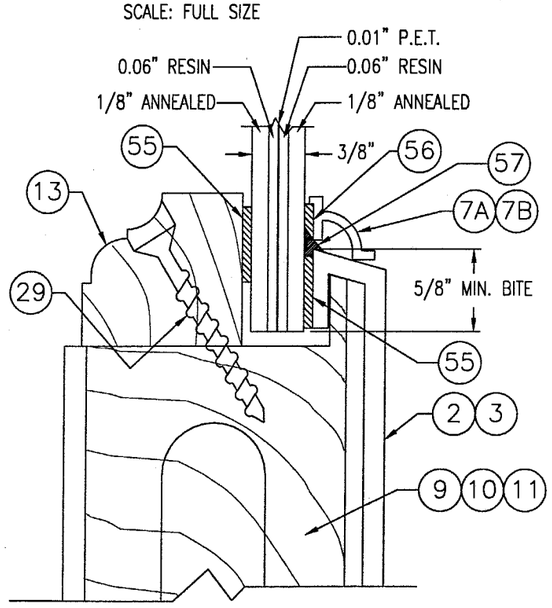

GLAZING DETAIL 2

NEBULA SAFETY-PLUS LAMINATED GLASS
(THIS DETAIL MAY BE USED WITH DOOR SIZES 39"X96" AND SMALLER)
SCALE: FULL SIZE

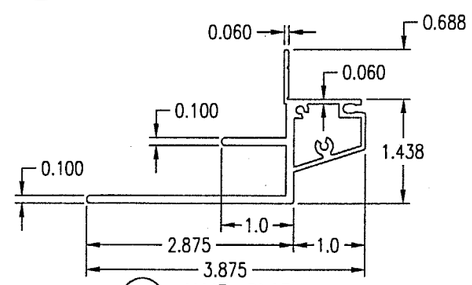

1 **JAMB CLAD**
6063-T5 ALUMINUM

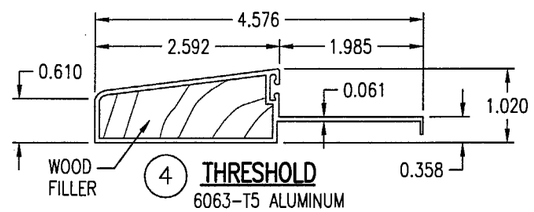

4 **THRESHOLD**
6063-T5 ALUMINUM

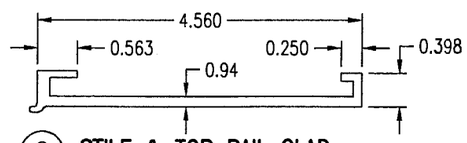

2 **STILE & TOP RAIL CLAD**
6063-T5 ALUMINUM

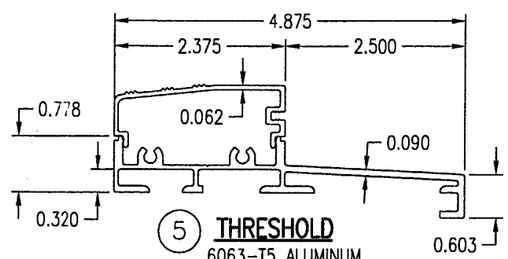

5 **THRESHOLD**
6063-T5 ALUMINUM

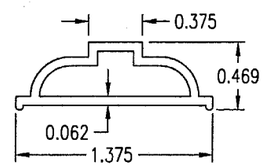

6 **ASTRIGAL CAP**
6063-T5 ALUMINUM

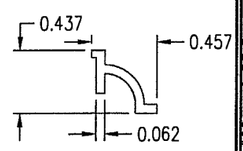

7A **GLAZING CAP**
6063-T5 ALUMINUM

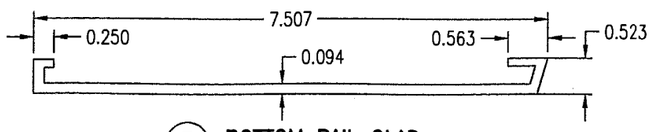

3 **BOTTOM RAIL CLAD**
6063-T5 ALUMINUM

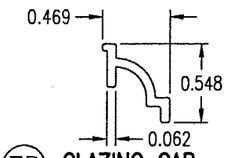

7B **GLAZING CAP**
6063-T5 ALUMINUM

APPROVED AS COMPLYING WITH THE SOUTH FLORIDA BUILDING CODE
DATE 03/07/2002
BY
PRODUCT CONTROL DIVISION
BUILDING CODE COMPLIANCE OFFICE
ACCEPTANCE NO. 01-0327.01

DRAWN BY: W.W.S.	DATE: 02/24/00
CHECKED BY: W.W.S.	DATE: 02/24/00
PLOT: 1=1	

NO.	REVISION DESCRIPTION	BY	DATE
A1	CHANGED SHEET #	WWS	3/19/01

(DADE)

DRAWING TITLE: OUTSWING FRENCH DOORS

MANUFACTURER: ULTIMATE DOOR OF PALM BEACH, INC.
2800 2ND AVE. NORTH
LAKE WORTH, FL 33461
561-642-2828

CONSULTANTS: W. W. SCHAEFER ENGINEERING & CONSULTING, P.A.
600 SANDTREE DRIVE; SUITE 203B
PALM BEACH GARDENS, FL 33403
PHONE: 561-775-4902 FAX: 561-775-4903

CERTIFICATION
MAR 20 2001
WARREN W. SCHAEFER, P.E.
P.E. NO. 44135

DRAWING NO. 1004A
REV.
SHEET NO. 7 OF 8

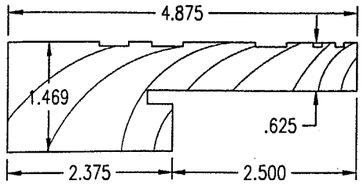

(8) JAMB
PONDEROSA PINE

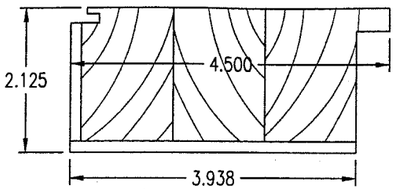

(9) STILE & TOP RAIL
PONDEROSA PINE

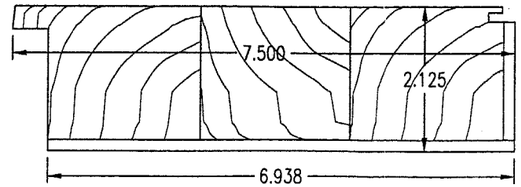

(10) BOTTOM RAIL
PONDEROSA PINE

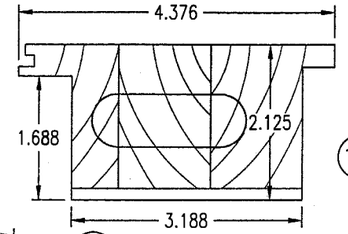

(11) RAISED PANEL RAIL
PONDEROSA PINE

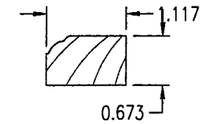

(12) GLAZING STOP
PONDEROSA PINE

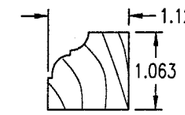

(13) OPTIONAL GLAZING STOP
PONDEROSA PINE

ALL ARE DRAWN AT 1/2 FULL SIZE

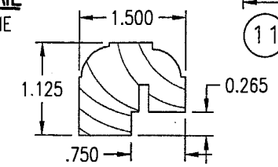

(14) ACTIVE ASTRIGAL
PONDEROSA PINE

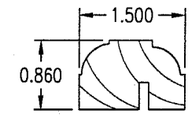

(15) FIXED ASTRIGAL
PONDEROSA PINE

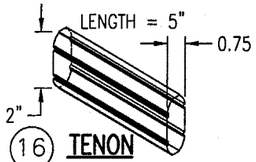

(16) TENON
HARD WOOD
N.T.S.

MATERIAL LIST

NO.	DESCRIPTION	NOTES
	PARTS & EXTRUSIONS	
1	JAMB CLAD	
2	STILE & TOP RAIL CLAD	
3	BOTTOM RAIL CLAD	
4	THRESHOLD (OPTION 1)	SINGLE SECTION ALUMINUM WITH WOOD FILLER
5	THRESHOLD (OPTION 2)	2 SECTION ALUMINUM
6	ASTRIGAL CAP	
7A	GLAZING CAP	USED WITH STILES & TOP RAIL (OPTIONAL)
7B	GLAZING CAP	USED WITH BOTTOM RAIL (OPTIONAL)
8	WOOD JAMB	
9	WOOD STILE & TOP RAIL	STAGE BLOCK (3 BLOCKS)
10	WOOD BOTTOM RAIL	STAGE BLOCK (3 BLOCKS)
11	RAISED PANEL RAIL	STAGE BLOCK (3 BLOCKS)
12	5/8 X 1 1/8 WOOD GLAZING STOP	MAY BE USED WITH ALL DOOR SIZES
13	1 1/16 X 1 1/8 GLAZING STOP	TO BE USED ONLY WITH 3080/6080 DOOR SIZES & SMALLER
14	WOOD ASTRIGAL	FOR USE WITH OPERABLE DOORS
15	WOOD ASTRIGAL	FOR USE WITH FIXED PANEL DOORS
16	WOOD TENON	1 PER TOP RAIL CORNER/2 PER BOTTOM RAIL CORNER
17	OPEN	
	FASTENERS	
19	NO. 8 X 1 1/4 SMS SCREWS (FIN ATTACHMENT)	3" FROM CORNERS & MAX. 9" O.C.
20	NO. 12 X MIN. 2" SMS SCREWS	2 AT HEAD JAMB INTO BUCK MIN 1 1/4" (1 EA. SIDE OF MIDPOINT 4" APART)
21	NO. 12 X MIN. 2" S/STL SMS	ONE PER HINGE THROUGH JAMB & INTO BUCK OR FIXED PANEL MIN. 1 1/4"
22	1/4" TAPCON OR CR-10 CONCRETE SCREW	6" FROM CORNERS & MAX. 24" O.C. (MIN. 1 1/4" CONCR. EMBED)
23	3/8" X 6" GALV. LAG BOLT WITH 1/4" WASHER	THROUGH HEAD JAMB & THRESHOLD INTO EA. PANEL @ FIXED DOORS
24	NO. 8 X 3" SQUARE SLOT FINISH SCREW	3" FROM CORNERS & MAX 12" O.C. (ANGLE UP TO 20 DEG IF REQ'D)
25	NO. 8 X 5/8" HEX TEK SCREW	2' FROM CORNER & MAX. 12" O.C. (CLAD TO JAMB)
26	NO. 6 X 1 1/2" S/STL SMS SCREW	2 PER PANEL STRIKE PLATE
27	NO. 8 X 2 1/2" SMS SCREW	4" FROM CORNERS & MAX. 9" O.C. (ALL SIDES OF FRAME)
28	NO. 6 X 5/8" SMS SCREW	2" FROM ENDS & MAX. 16" O.C. (SUB-THRESHOLD TO THRESHOLD)
29	NO. 6 X 1 1/2" TRIM SCREW	2" FROM CORNERS & MAX. 9" O.C.
30	NO. 7 X 2 1/4" SQUARE SLOT TRIM SCREW	1 1/2" FROM ENDS & MAX. 11" O.C. (ASTRIGAL TO ACTIVE PANEL)
31	NO. 7 X 2 1/4" SQUARE SLOT TRIM SCREW	1 1/2" FROM ENDS & MAX. 11" O.C. (ASTRIGAL TO EACH FIXED PANEL)
32	NO. 10 X 1 1/2" S/STL SMS SCREWS	4 PER HINGE INTO PANEL
33	NO. 12 X 1" S/STL SMS SCREW	3 PER HINGE INTO JAMB
34	NO. 8 X 2 1/2" GALV. DECK SCREWS	2 PER JAMB CORNER (SIDE JAMB TO HEAD JAMB)
35	NO. 10 X 3 1/2" SMS SCREW	1 PER JAMB CORNER (HEAD JAMB TO SIDE JAMB)
36	NO. 6 X 2" SMS SCREWS	2 PER JAMB CLAD CORNER INTO CLAD SCREW BOSS
37	OPEN	
38	OPEN	

MATERIAL LIST

NO.	DESCRIPTION	NOTES
	HARDWARE	
39	3-POINT LOCK SYSTEM AT ACTIVE PANEL	SCHLEGEL BY FULEX CO. (MAY BE USED WITH ALL DOOR SIZES)
40	SCHLAGE DEAD BOLT NO. B162V4626 OR EQUAL	MAY ONLY BE USED WITH 6080/3080 DOORS & SMALLER
41	HANDLE	
42	4 X 4 1/2 HAGER HINGE NO. 1191	NICLEL PLATED BRASS WITH S/STL BALL BEARINGS
43	HAGER 458-B26D-12" FLUSH BOLT	1 AT EA. TOP & BOTTOM OF EA. PANEL (W/3/8" S/STL THRU-BOLT)
44	1" X 2 1/4" X 1/16" S/STL STRIKE PLATE	1 AT EACH PANEL MEETING CORNER AT TOP & BOTTOM
45	OPEN	
	SEALS & SEALANTS	
46	KOROSEAL SWEEP NO. 48-28-3770-1	FULL LENGTH OF BOTTOM RAIL
47	POLYMERIC BULB GASKET	CONTINUOUS AT THRESHOLD
48	KOROSEAL SWEEP NO. 28-28-1380-00-1	FULL LENGTH OF BOTOM RAIL
49	KOROSEAL GASKET NO. 28-23-5210-00-1	CONTINUOUS AT THRESHOLD
50	SCHLEGEL Q-LON 650 SEAL NO. A-6F16E	CONTINUOUS AT SIDE & HEAD JAMBS
51	RJF INTER. NO. 28-28-1120-00-1 SWEEP	CONTINUOUS AT TOP OF PANELS
52	KOROSEAL NO. 28-23-5210-00-1 DOOR SEAL	CONTINUOUS AT SIDE JAMBS
53	PAK-LITE 1/16 X 9/16 (2) SIDED TAPE	CLOSED CELL URATHANE (ALUM ASTRIGAL CAP TO FIXED & ACTIVE PANELS)
54	SCHLEGEL Q-LON 650 SEAL NO. A-6F16E	CONTINUOUS AT INTERIOR ASTRIGAL
55	PAK-LITE 1/16 X 9/16 (2) SIDED TAPE	GLAZING TAPE CONTINUOUS AROUND EACH SIDE OF GLASS
56	PAK-LITE 1/16 X 1/4 (2) SIDED TAPE	ATTACHES DECORATIVE ALUMINUM GLAZING CAP TO GLASS
57	DOW CORNING 795 SILICON SEALANT	CAP BEAD CONTINUOUS AROUND EXTERIOR OF GLASS
58	DOW CORNING 795 SILICON SEALANT	SEALS JAMB CLAD CORNERS
59	OPEN	
	OTHER	
60	SUB-THRESHOLD	SEALS END GRAIN OF FRAME
61	OPEN	

1 THE FOLLOWING WOOD SPECIES SHALL BE ALTERNATES TO PONDEROSA PINE:
1. MAHOGONY
2. OAK
3. CHERRY
4. CYPRUS
5. DOUGLAS FIR

APPROVED AS COMPLYING WITH THE SOUTH FLORIDA BUILDING CODE
DATE 8/07/2002
BY
PRODUCT CONTROL DIVISION
BUILDING CODE COMPLIANCE OFFICE
ACCEPTANCE NO. 01-0327.01

DRAWN BY: W.W.S.	DATE: 02/24/00
CHECKED BY: W.W.S.	DATE: 02/24/00
PLOT: 1=2	

NO.	REVISION DESCRIPTION	BY	DATE
A1	CHANGED SHEET #	WWS	3/19/01

(DADE)

DRAWING TITLE
OUTSWING FRENCH DOORS

MANUFACTURER
ULTIMATE DOOR OF PALM BEACH, INC.
2800 2ND AVE. NORTH
LAKE WORTH, FL 33461
561-642-2828

CONSULTANTS
W. W. SCHAEFER ENGINEERING & CONSULTING, P.A.
600 SANDTREE DRIVE; SUITE 203B
PALM BEACH GARDENS, FL 33403
PHONE: 561-775-4902 FAX: 561-775-4903

CERTIFICATION
MAR 20 2001
WARREN W. SCHAEFER, P.E.
P.E. NO. 44135

DRAWING NO. 1004A
REV.
SHEET NO. 8 OF 8