MIAMI-DADE

MIAMI-DADE COUNTY, FLORIDA
METRO-DADE FLAGLER BUILDING

BUILDING CODE COMPLIANCE OFFICE
METRO-DADE FLAGLER BUILDING
140 WEST FLAGLER STREET, SUITE 1603
MIAMI, FLORIDA 33130-1563
(305) 375-2901 FAX (305) 375-2908

CONTRACTOR LICENSING SECTION
(305) 375-2527 FAX (305) 375-2558

CONTRACTOR ENFORCEMENT DIVISION
(305) 375-2966 FAX (305) 375-2908

PRODUCT CONTROL DIVISION
(305) 375-2902 FAX (305) 372-6339

PRODUCT CONTROL NOTICE OF ACCEPTANCE

Glasswall and Doors, Inc.
3945 NW 32 Avenue
Miami ,FL 33142

Your application for Notice of Acceptance (NOA) of:
Series "100" Aluminum Sliding Glass Door-Impact
under Chapter 8 of the Code of Miami-Dade County governing the use of Alternate Materials and Types of Construction, and completely described herein, has been recommended for acceptance by the Miami-Dade County Building Code Compliance Office (BCCO) under the conditions specified herein.

This NOA shall not be valid after the expiration date stated below. BCCO reserves the right to secure this product or material at any time from a jobsite or manufacturer's plant for quality control testing. If this product or material fails to perform in the approved manner, BCCO may revoke, modify, or suspend the use of such product or material immediately. BCCO reserves the right to revoke this approval, if it is determined by BCCO that this product or material fails to meet the requirements of the South Florida Building Code.

The expense of such testing will be incurred by the manufacturer.

ACCEPTANCE NO.: 01-0402.03
EXPIRES: 10/25/2006

Raul Rodriguez
Chief Product Control Division

THIS IS THE COVERSHEET, SEE ADDITIONAL PAGES FOR SPECIFIC AND GENERAL CONDITIONS
BUILDING CODE & PRODUCT REVIEW COMMITTEE

This application for Product Approval has been reviewed by the BCCO and approved by the Building Code and Product Review Committee to be used in Miami-Dade County, Florida under the conditions set forth above.

Francisco J. Quintana, R.A.
Director
Miami-Dade County
Building Code Compliance Office

APPROVED: 10/25/2001

Glasswall & Doors, Inc.

ACCEPTANCE No.: 01-0402.03

APPROVED : October 25, 2001

EXPIRES : October 25, 2006

NOTICE OF ACCEPTANCE: SPECIFIC CONDITIONS

1. SCOPE

1.1 This approves an aluminum sliding glass door as described in Section 2 of this Notice of Acceptance, designed to comply with the South Florida Building Code, (SFBC), 1994 Edition for Miami-Dade County, for the locations where the pressure requirements, as determined by SFBC Chapter 23, do not exceed the Design Pressure Rating values indicated in the approved drawing.

2. PRODUCT DESCRIPTION

2.1 The **Series "100"** Aluminum Sliding Glass Door– **Impact Resistant** and its components shall be constructed in strict compliance with the following document: Drawing No. **00-249**, Sheets 1 thru 4 of 4, titled "Sliding Glass Door-SERIES 100," dated 3/27/01 with last revision on 09/25/01, prepared by Knezevich & Associates, Inc, signed and sealed by V. J. Knezevich,P.E., bearing the Miami-Dade County Product Control approval stamp with the Notice of Acceptance number and approval date by the Miami-Dade County Product Control Division. This document shall hereinafter be referred to as the approved drawing.

3. LIMITATIONS

3.1 This approval applies to single unit applications only, as shown in approved drawings.

3.2 Head receptor is not allowed to be used in this installation.

4. INSTALLATION:

4.1 The aluminum window wall system and its components shall be installed in strict compliance with the approved drawings.

4.2 Hurricane protection system (shutters):

4.2.1 For Large Missile Impact Resistant Glass: the installation of this unit **will not require** a hurricane protection system.

4.2.2 For Small Missile Impact Resistant Glass: the installation of this unit up to 30 feet above grade, **will require** a hurricane protection system, but for installations above 30 feet above grade **will not require** a hurricane protection system.

4.2.3 To determine if the glass is large missile or small missile impact resistant, see glazing detail on Sheet 1 of approved drawings.

5. LABELING

5.1 Each unit shall bear a permanent label with the manufacturer's name or logo, city, state and following statement: "Miami-Dade County Product Control Approved".

6. BUILDING PERMIT REQUIREMENTS

6.1 Application for building permit shall be accompanied by two copies of the following:

6.1.1 This Notice of Acceptance.

6.1.2 Duplicate copies of the approved drawings, as identified in Section 2 of this Notice of Acceptance, clearly marked to show the components selected for the proposed installation.

6.1.3 Any other documents required by the Building Official or the South Florida Building Code (SFBC) in order to properly evaluate the installation of this system.

Ishaq I. Chanda

Ishaq I. Chanda, P.E., Product Control Examiner
Product Control Division

Glasswall & Doors, Inc.

ACCEPTANCE No.: 01-0402.03

APPROVED : October 25, 2001

EXPIRES : October 25, 2006

NOTICE OF ACCEPTANCE: STANDARD CONDITIONS

1. Renewal of this Acceptance (approval) shall be considered after a renewal application has been filed and the original submitted documentation, including test supporting data, engineering documents, are no older than eight (8) years.

2. Any and all approved products shall be permanently labeled with the manufacturer's name, city, state, and the following statement: "Miami-Dade County Product Control Approved", or as specifically stated in the specific conditions of this Acceptance.

3. Renewals of Acceptance will not be considered if:
   a) There has been a change in the South Florida Building Code affecting the evaluation of this product and the product is not in compliance with the code changes;
   b) The product is no longer the same product (identical) as the one originally approved;
   c) If the Acceptance holder has not complied with all the requirements of this acceptance, including the correct installation of the product;
   d) The engineer who originally prepared, signed and sealed the required documentation initially submitted is no longer practicing the engineering profession.

4. Any revision or change in the materials, use, and/or manufacture of the product or process shall automatically be cause for termination of this Acceptance, unless prior written approval has been requested (through the filing of a revision application with appropriate fee) and granted by this office.

5. Any of the following shall also be grounds for removal of this Acceptance:
   a) Unsatisfactory performance of this product or process.
   b) Misuse of this Acceptance as an endorsement of any product, for sales, advertising or any other purpose.

6. The Notice of Acceptance number preceded by the words Miami-Dade County, Florida, and followed by the expiration date may be displayed in advertising literature. If any portion of the Notice of Acceptance is displayed, then it shall be done in its entirety.

7. A copy of this Acceptance as well as approved drawings and other documents, where it applies, shall be provided to the user by the manufacturer or its distributors and shall be available for inspection at the job site at all time. The engineer need not reseal the copies.

8. Failure to comply with any section of this Acceptance shall be cause for termination and removal of Acceptance.

9. This Notice of Acceptance consists of pages 1, 2 and this last page 3.

END OF THIS ACCEPTANCE

Ishaq I. Chanda

Ishaq I. Chanda, P.E., Product Control Examiner
Product Control Division

Glasswall & Doors, Inc.

ACCEPTANCE No.: 01-0402.03

APPROVED : October 25, 2001

EXPIRES : October 25, 2006

NOTICE OF ACCEPTANCE: EVIDENCE SUBMITTED
(For File ONLY. Not part of NOA.)

A. DRAWINGS

1. Manufacturer's die drawings and sections.
2. Drawing No. **00-249**, Sheets 1 thru 4 of 4, titled "Sliding Glass Door-SERIES 100," dated 3/27/01 with last revision on 09/25/01, prepared by Knezevich & Associates, Inc, signed and sealed by V. J. Knezevich,P.E.

B. TESTS

1. Test reports on 1) Air Infiltration Test, per SFBC, PA 202-94
   2) Uniform Structural load Test, Loading per SFBC, PA 202-94
   3) Water Resistance Test, per SFBC, PA 202-94
   4) Large Missile Impact Test per SFBC, PA 201-94
   5) Small Missile Impact Test per SFBC, PA 201-94
   6) Cyclic Wind Pressure Loading per SFBC, PA 203-94

   Along with marked-up drawings and installation diagram of series 100 aluminum sliding door, prepared by Construction Testing Corporation, Test Report No. **01-001**, dated March 19, 2001, signed and sealed by Yamil G. Kuri, P.E., and revised on September 06, 2001 with additional information , provided by Construction Testing Corporation signed by.George Doltzer

C. CALCULATIONS

1. Anchor calculations and structural analysis, dated 3/26/01, 08-07-01, 09-25-01 and last revised on 11-08-2001 prepared by Knezevich Associates, Inc., signed and sealed by V. John Knezevich, P.E.

D. MATERIAL CERTIFICATIONS

1. Notice of Acceptance No. **98-0608.03** issued to E.I. DuPont DeNemours, for "Sentry Glass Plus" approved on 01/14/1999, expiring on 01/14/2002.
2. Notice of Acceptance No. **98-0728.05** issued to Solutia Inc., for "Saflex IIIG PVB Polyvinyl butryal interlayer" approved on 08/27/1998, expiring on 05/21/2001
3. Notice of Acceptance No. **01-0205.02** issued to Solutia Inc., for "Saflex/Keepsafe Maximum" approved on 05/17/200, expiring on 05/21/2006

E. STATEMENTS

1. Statement letter of compliance, dated March 27, 2001, signed and sealed by V. John Knezevich, P.E.
2. Statement letter of no financial interest, dated February 13, 2001, signed and sealed by V. John Knezevich, P.E.
3. Additional information for CTC report 01-001, provided by Construction Testing Corporation signed by.George Doltzer

Ishaq I. Chanda

Ishaq I. Chanda, P.E., Product Control Examiner
Product Control Division

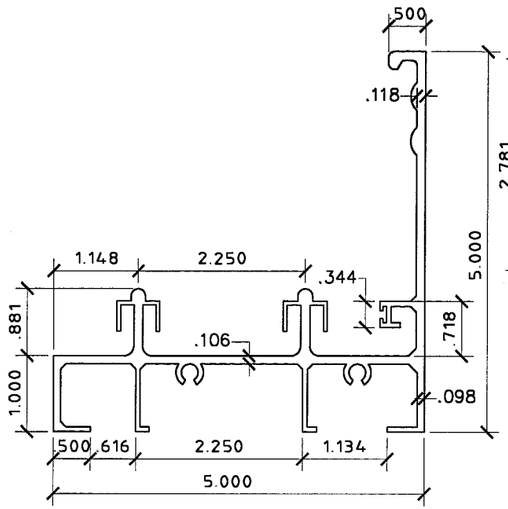

① SILL 100-002
SCALE: HALF SIZE

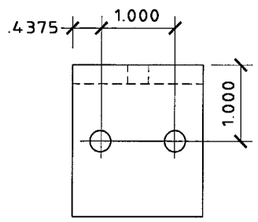

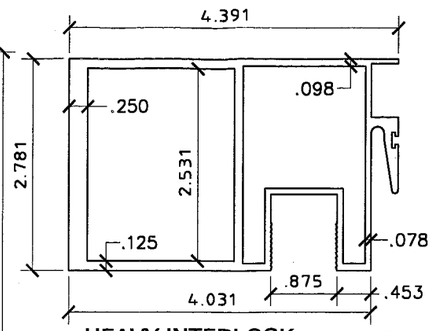

② HEAVY INTERLOCK 100-007
SCALE: HALF SIZE

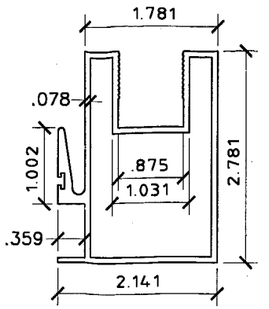

③ INTERLOCK 100-005
SCALE: HALF SIZE

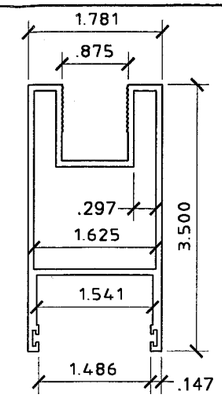

④ FIXED AND LOCK STYLE 100-004
SCALE: HALF SIZE

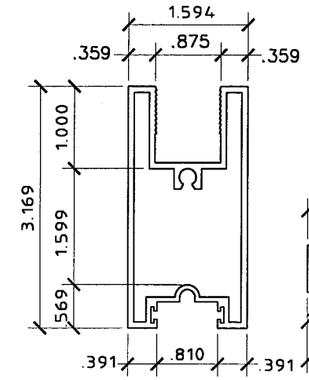

⑤ FIXED BOTTOM & TOP OF PANELS 100-008
SCALE: HALF SIZE

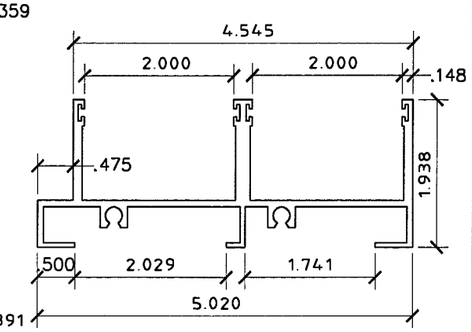

⑥ JAMB AND HEAD 100-001
SCALE: HALF SIZE

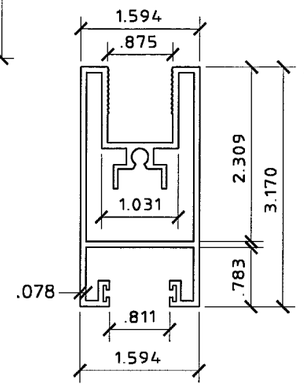

⑦ BOTTOM OF MOVING PANEL 100-003
SCALE: HALF SIZE

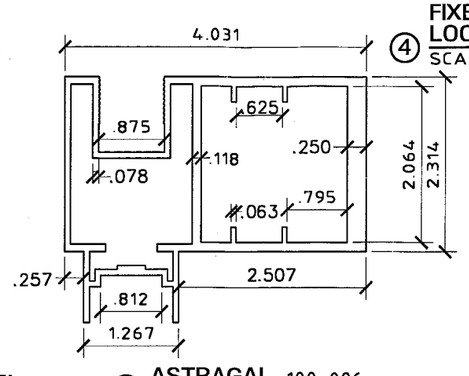

⑧ ASTRAGAL 100-006
SCALE: HALF SIZE

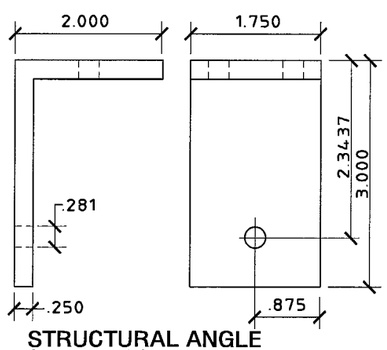

⑨ STRUCTURAL ANGLE 3" x 2" x 1/4" x 1-3/4" AT TOP OF FIXED PANEL
SCALE: HALF SIZE

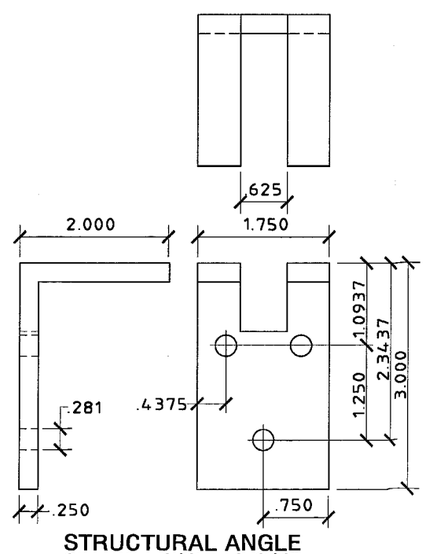

⑩ STRUCTURAL ANGLE 3" x 2" x 1/4" x 1-3/4" AT BOTTOM OF FIXED PANEL
SCALE: HALF SIZE

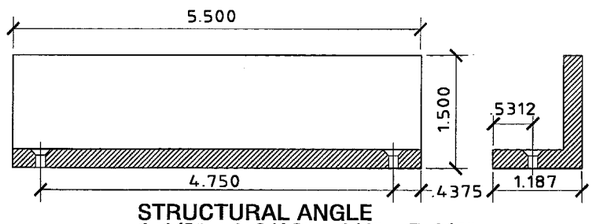

⑪ STRUCTURAL ANGLE 1-1/2" x 1-3/16" x 1/4" x 5-1/2" AT BOTTOM OF ASTRAGAL
SCALE: HALF SIZE

GENERAL NOTES

1. THIS SLIDING GLASS DOOR SYSTEM IS DESIGNED AND TESTED TO COMPLY WITH THE REQUIREMENTS OF THE 1994 DADE COUNTY EDITION OF THE SOUTH FLORIDA BUILDING CODE (S.F.B.C.) CHAPTER 4, CHAPTER 23, CHAPTER 35, UNDER THE SPECIFIC CONDITIONS SHOWN ON THIS DRAWING.
2. ALL EXTRUSIONS ARE ALUMINUM, 6005-T5 ALLOY, U.O.N., WITH A MINIMUM Fy OF 35,000 P.S.I.
3. WOOD BUCKS SHALL BE INSTALLED (NOT BY GLASSWALL) AND ANCHORED SO THAT THE BUILDING RESISTS THE SUPERIMPOSED LOADS IN ACCORDANCE WITH REQUIREMENTS OF 1994 S.F.B.C.
4. SMALL MISSILE IMPACT (TYPE 1 GLAZING): INSTALLATION UP TO 30FT ABOVE GRADE WILL REQUIRE A HURRICANE PROTECTION SYSTEM, BUT FOR INSTALLATION ABOVE 30FT ABOVE GRADE WILL NOT REQUIRE A HURRICANE PROTECTION SYSTEM.
5. LARGE MISSILE IMPACT (TYPE 2 GLAZING): THE INSTALLATION WILL NOT REQUIRE HURRICANE PROTECTION SYSTEM.

SLIDING GLASS DOOR

SERIES 100
SLIDING GLASS DOOR
BASED ON CONSTRUCTION TESTING CORPORATION No. 01-001
GLASS MANUFACTURED BY VITEMCO:
TYPE 1-(1/4" TEMPERED / .090" PVB BY SOLUTIA/ 1/4" TEMPERED) (SMALL MISSILE IMPACT TESTS)
TYPE 2-(1/4" HEAT STRENGTHENED / .090" SENTRY GLASS PLUS BY DUPONT/ 1/4" HEAT STRENGTHENED. (LARGE MISSILE IMPACT TESTS)

DESIGN PRESSURE: 110 P.S.F. (POSITIVE & NEGATIVE)
WTP = 16.5 PSF.

NO	PART NO	REQ'D	PART NAME	REMARKS
1	100-002	1	SILL	FRAME
2	100-007	2	HEAVY INTERLOCK	FRAME
3	100-005	2	INTERLOCK	FRAME
4	100-004	3	FIXED AND LOCK STYLE	FRAME
5	100-008	6	FIXED BOTTOM & TOP	FRAME
6	100-001	3	JAMB AND HEAD	FRAME
7	100-003	2	MOVING BOTTOM	FRAME
8	100-006	1	ASTRAGAL	FRAME
9	N/A	2	STRUCTURAL ANGLE	FRAME
10	N/A	2	STRUCTURAL ANGLE	FRAME
11	N/A	1	STRUCTURAL ANGLE	FRAME
12	N/A	4	9/16" LAMINATED GLASS (SEE DETAIL ABOVE)	PANEL

APPROVED AS COMPLYING WITH THE SOUTH FLORIDA BUILDING CODE
DATE OCTOBER 25, 2001
BY Ishaq I. Chanda
PRODUCT CONTROL DIVISION
BUILDING CODE COMPLIANCE OFFICE
ACCEPTANCE NO. 01-0402.03

KNEZEVICH & ASSOCIATES, INC.
CONSULTING ENGINEERS • PRODUCT TESTING
1260 N. UNIVERSITY DRIVE, SUITE 180 • FORT LAUDERDALE, FL 33322
TEL: (954) 382-2800 • FAX: (954) 382-2889 • FLORIDA COA #3205
WEBSITE: WWW.KNEZEVICH.COM • E-MAIL: KA@KNEZEVICH.COM

COPYRIGHT © 2000 KNEZEVICH & ASSOCIATES, INC.

SLIDING GLASS DOOR
SERIES 100

GLASSWALL & DOORS, INC.
3945 N.W. 32nd AVENUE
MIAMI, FLORIDA 33142
TEL: (305) 638-5151 FAX: (305) 638-5158

revisions

no	date	by	description
1	08/03/01	AS	COUNTY COMMENTS
2	09/25/01	AS	COUNTY COMMENTS

V.J. KNEZEVICH
PROFESSIONAL ENGINEER
FL License No: PE 0010983

SEP 25 2001

date	03/27/01
scale AS NOTED	drawn by AV
design by AS	checked by VJK
drawing no. 00-249	
sheet 1 of 4	

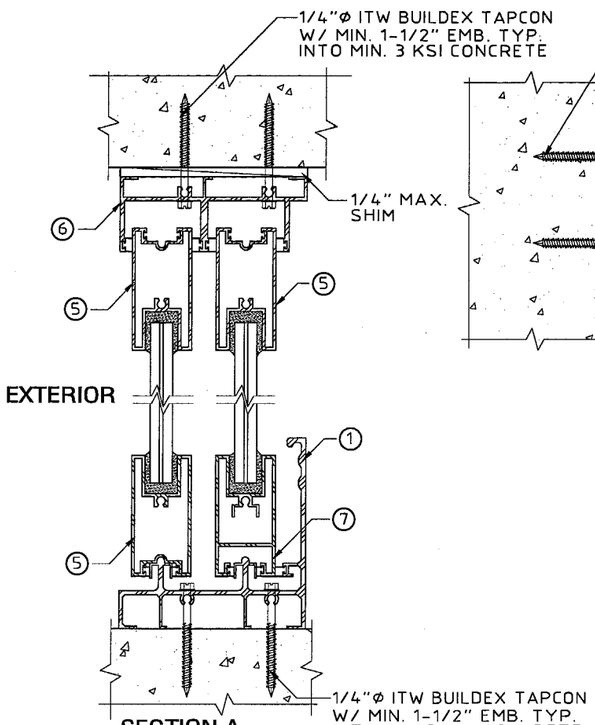

SECTION A
SCALE: 3" = 1' - 0"

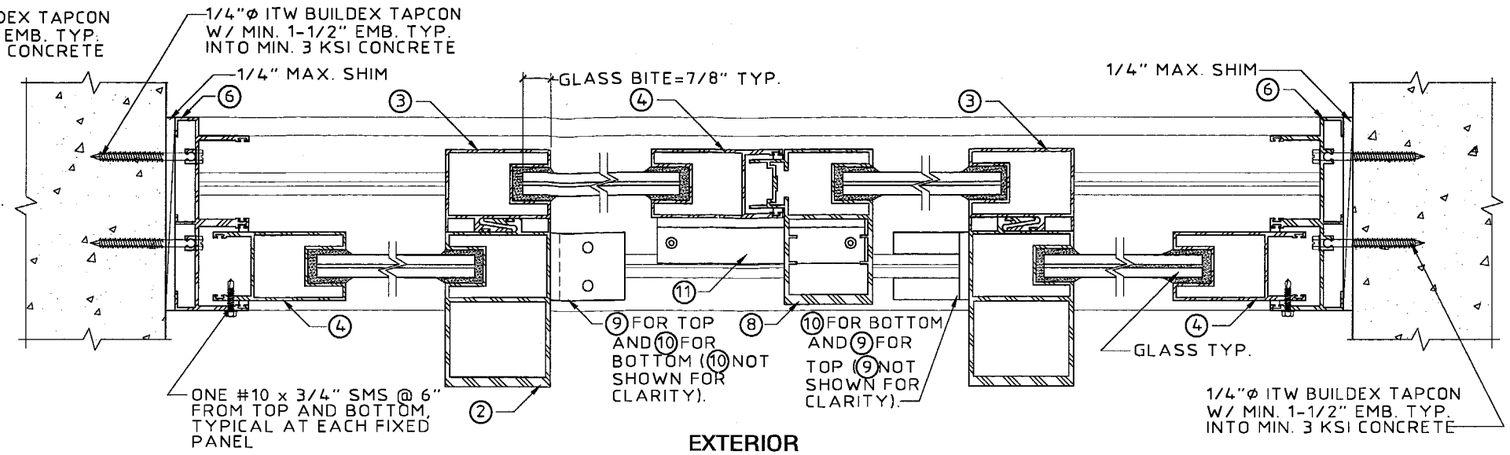

SECTION B
SCALE: 3" = 1' - 0"

DOOR DIMENSIONS		DESIGN LOAD CAPACITY (P.S.F.)	
MAX. WIDTH	MAX. HEIGHT	POSITIVE	NEGATIVE
4' - 3-7/16"	9' - 2"	110.0	110.0

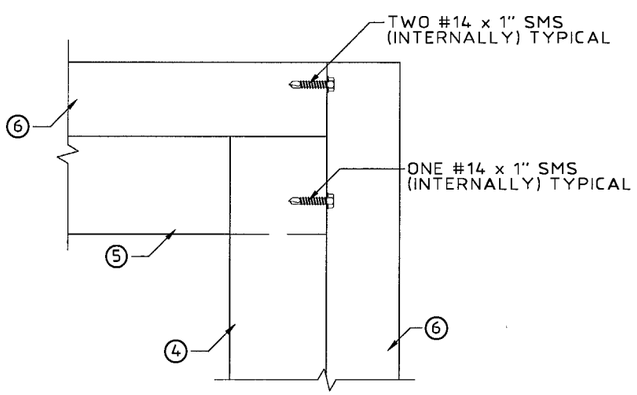

DETAIL 1
SCALE: 3" = 1' - 0"

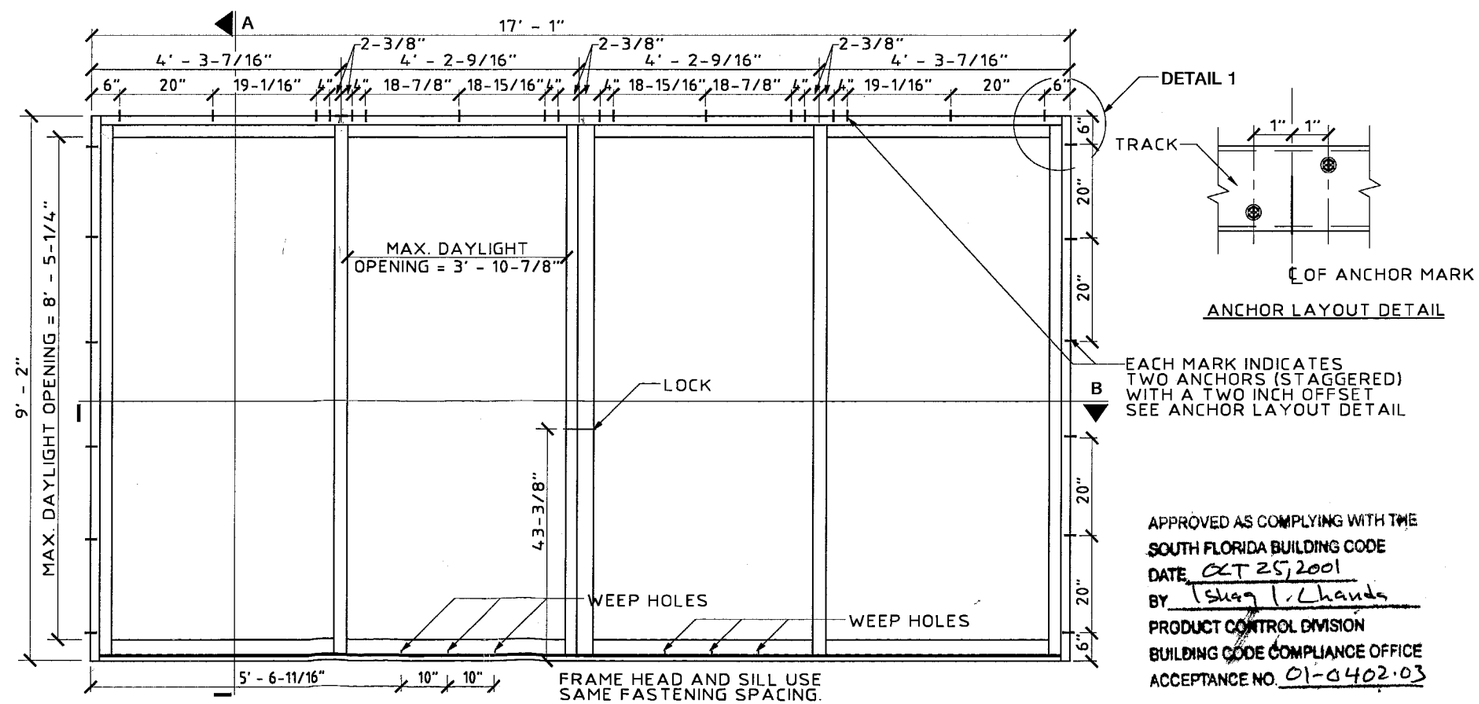

TYPICAL ELEVATION
SCALE: 3/8" = 1' - 0"

APPROVED AS COMPLYING WITH THE
SOUTH FLORIDA BUILDING CODE
DATE OCT 25, 2001
BY Shaz I. Chanda
PRODUCT CONTROL DIVISION
BUILDING CODE COMPLIANCE OFFICE
ACCEPTANCE NO. 01-0402.03

KNEZEVICH & ASSOCIATES, INC.
CONSULTING ENGINEERS • PRODUCT TESTING
1260 N. UNIVERSITY DRIVE, SUITE 180 • FORT LAUDERDALE, FL 33322
TEL: (954) 382-2800 • FAX: (954) 382-2989 • FLORIDA COA #3205
WEBSITE: WWW.KNEZEVICH.COM • E-MAIL: KA@KNEZEVICH.COM

COPYRIGHT © 2000 KNEZEVICH & ASSOCIATES, INC.

SLIDING GLASS DOOR
SERIES 100

GLASSWALL & DOORS, INC.
3945 N.W. 32nd AVENUE
MIAMI, FLORIDA 33142
TEL: (305) 638-5151 FAX: (305) 638-5158

revisions

no	date	by	description
1	08/03/01	AS	COUNTY COMMENTS
2	09/25/01	AS	COUNTY COMMENTS

V.J. KNEZEVICH
PROFESSIONAL ENGINEER
FL License No:
PE 0010983

SEP 25 2001

date 03/27/01	
scale AS NOTED	drawn by AV
design by AS	checked by VJK

drawing no.
00-249

sheet 2 of 4

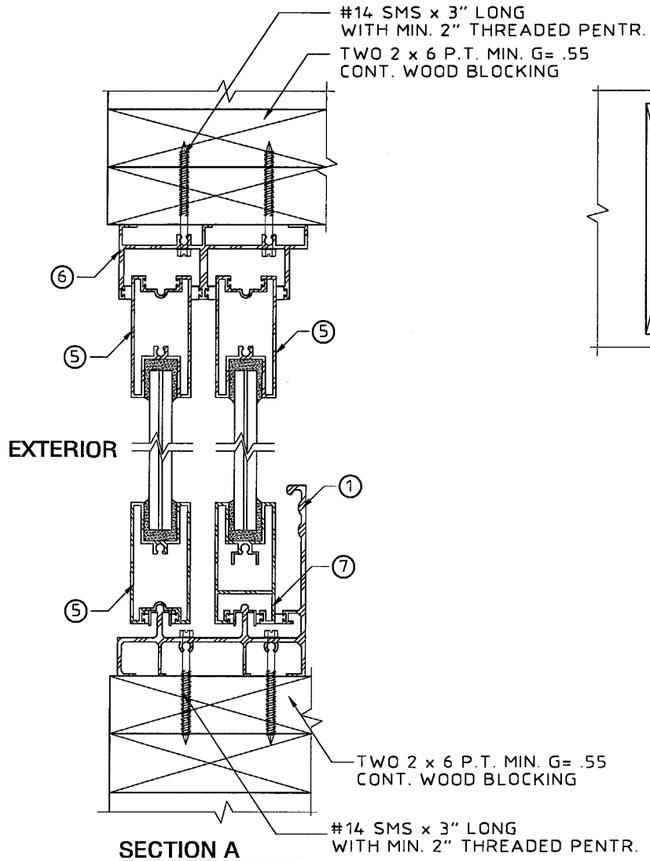

SECTION A
SCALE: 3" = 1' - 0"

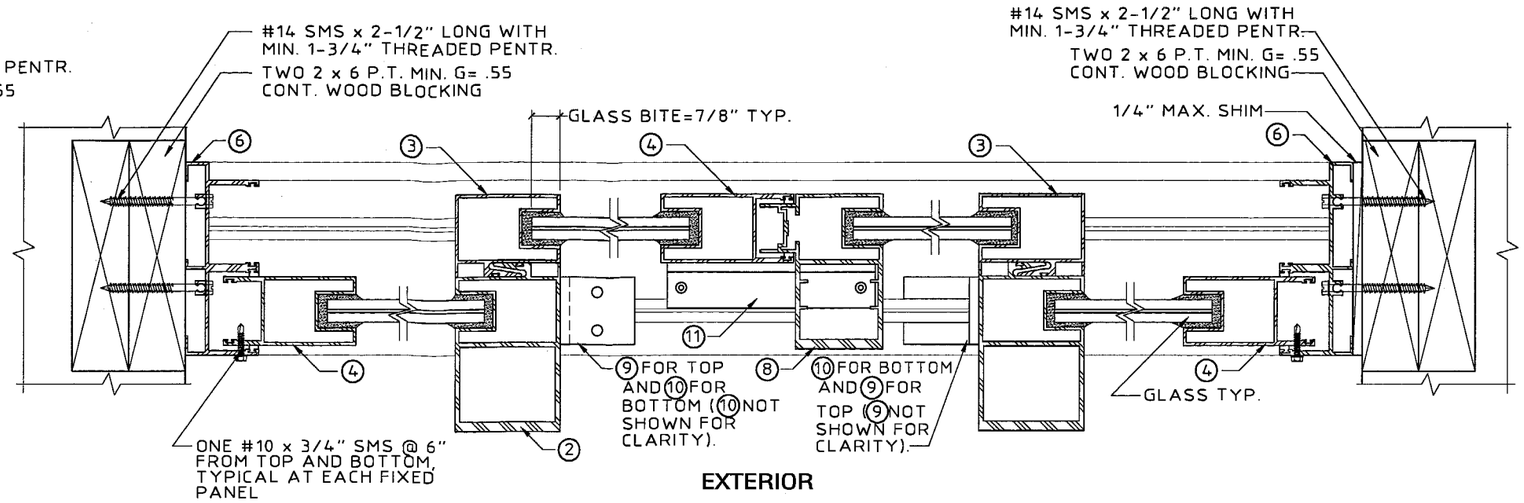

SECTION B
SCALE: 3" = 1' - 0"

DOOR DIMENSIONS		DESIGN LOAD CAPACITY (P.S.F.)	
MAX. WIDTH	MAX. HEIGHT	POSITIVE	NEGATIVE
4' - 3-7/16"	9' - 2"	110.0	110.0

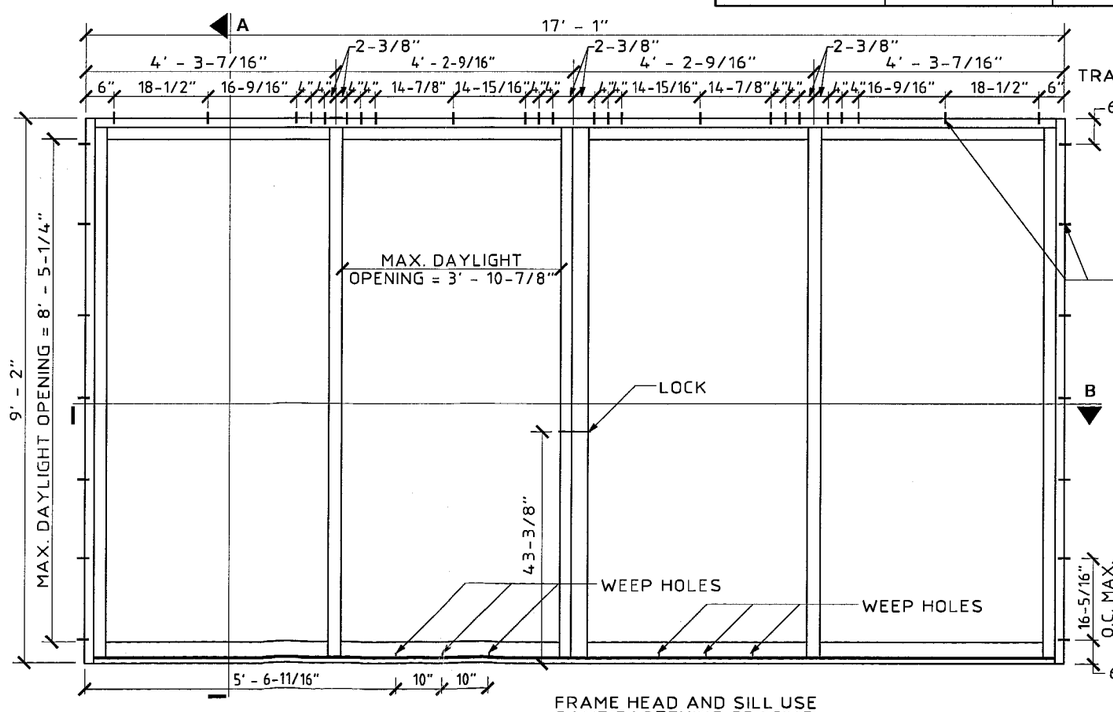

ANCHOR LAYOUT DETAIL

FRAME HEAD AND SILL USE
SAME FASTENING SPACING.

TYPICAL ELEVATION
SCALE: 3/8" = 1' - 0"

APPROVED AS COMPLYING WITH THE
SOUTH FLORIDA BUILDING CODE
DATE OCT 25, 2001
BY Ishaq I. Chanda
PRODUCT CONTROL DIVISION
BUILDING CODE COMPLIANCE OFFICE
ACCEPTANCE NO. 01-0402.03

KNEZEVICH & ASSOCIATES, INC.
CONSULTING ENGINEERS • PRODUCT TESTING
1260 N. UNIVERSITY DRIVE, SUITE 180 • FORT LAUDERDALE, FL 33322
TEL: (954) 382-2800 • FAX: (954) 382-2989 • FLORIDA COA #3205
WEBSITE: WWW.KNEZEVICH.COM • E-MAIL: KA@KNEZEVICH.COM
COPYRIGHT © 2000 KNEZEVICH & ASSOCIATES, INC.

SLIDING GLASS DOOR
SERIES 100

GLASSWALL & DOORS, INC.
3945 N.W. 32nd AVENUE
MIAMI, FLORIDA 33142
TEL: (305) 638-5151 FAX: (305) 638-5158

revisions

no	date	by	description
1	08/03/01	AS	COUNTY COMMENTS
2	09/25/01	AS	COUNTY COMMENTS

V.J. KNEZEVICH
PROFESSIONAL ENGINEER
FL License No:
PE 0010983

SEP 25 2001

date 03/27/01	
scale AS NOTED	drawn by AV
design by AS	checked by VJK

drawing no.
00-249

sheet 3 of 4

ADDITIONAL CONFIGURATIONS

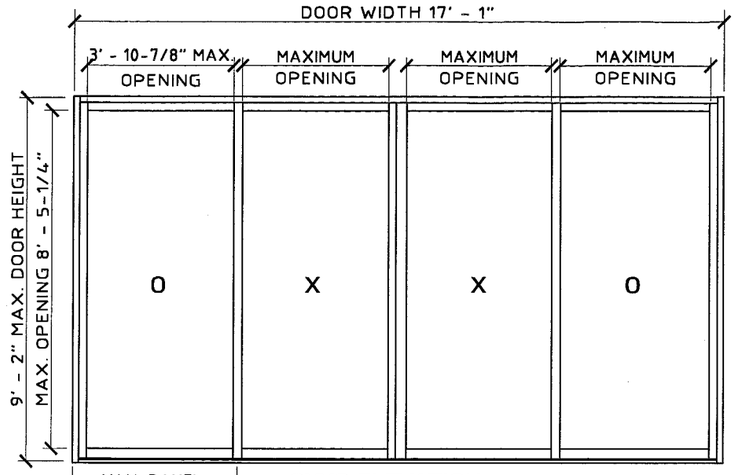

OXXO ELEVATION
SCALE: 1/4" = 1' - 0"

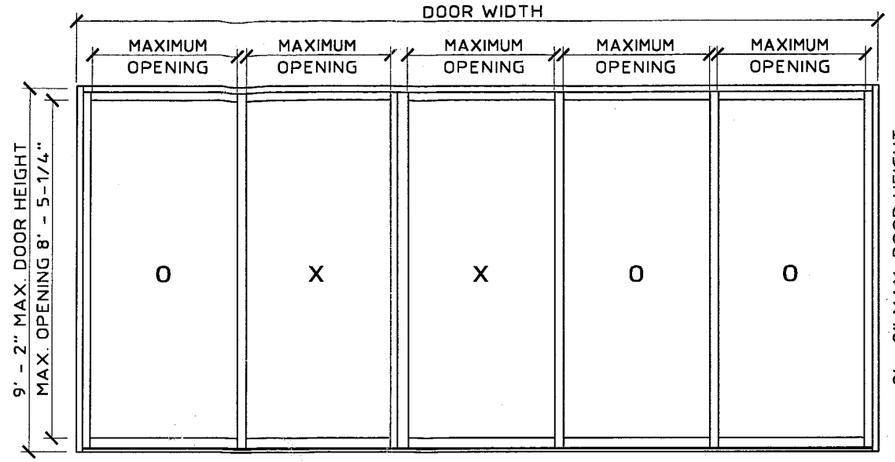

OXXOO ELEVATION
SCALE: 1/4" = 1' - 0"

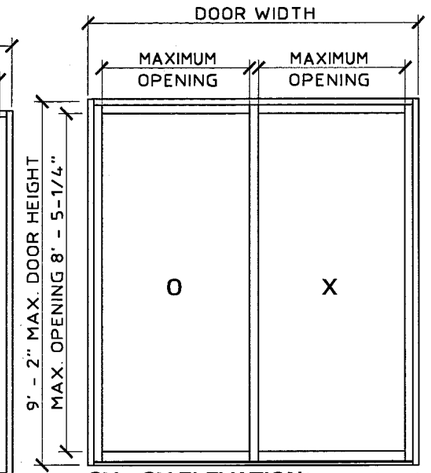

OX - OX ELEVATION (OX SHOWN)
SCALE: 1/4" = 1' - 0"

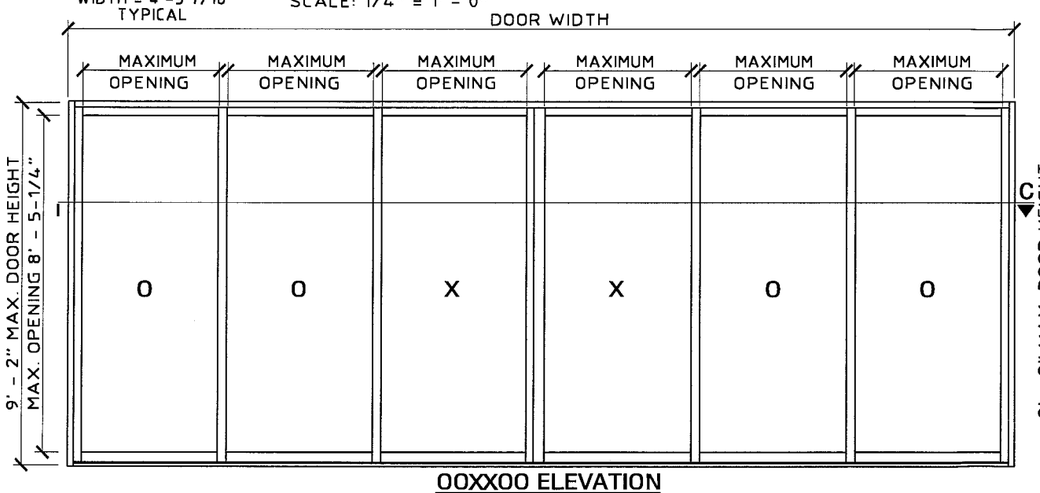

OOXXOO ELEVATION
SCALE: 1/4" = 1' - 0"

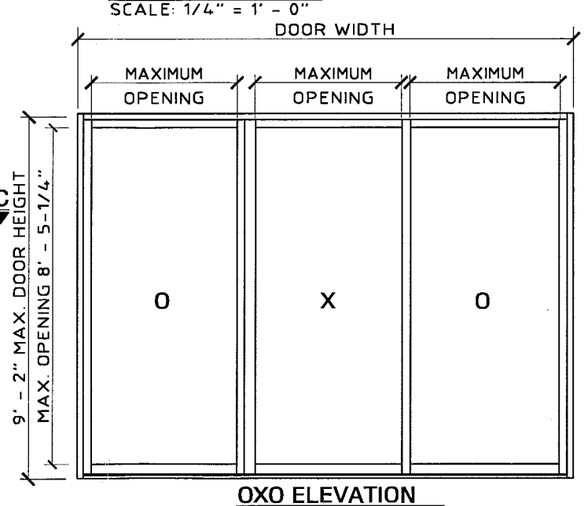

OXO ELEVATION
SCALE: 1/4" = 1' - 0"

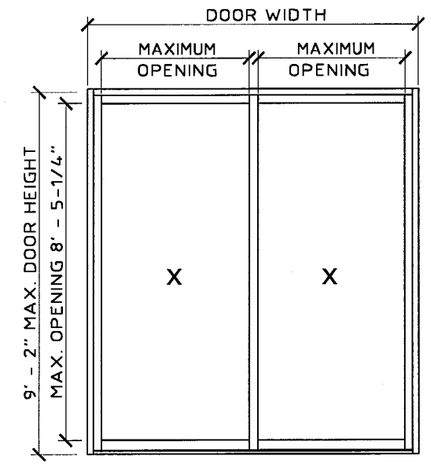

XX ELEVATION
SCALE: 1/4" = 1' - 0"

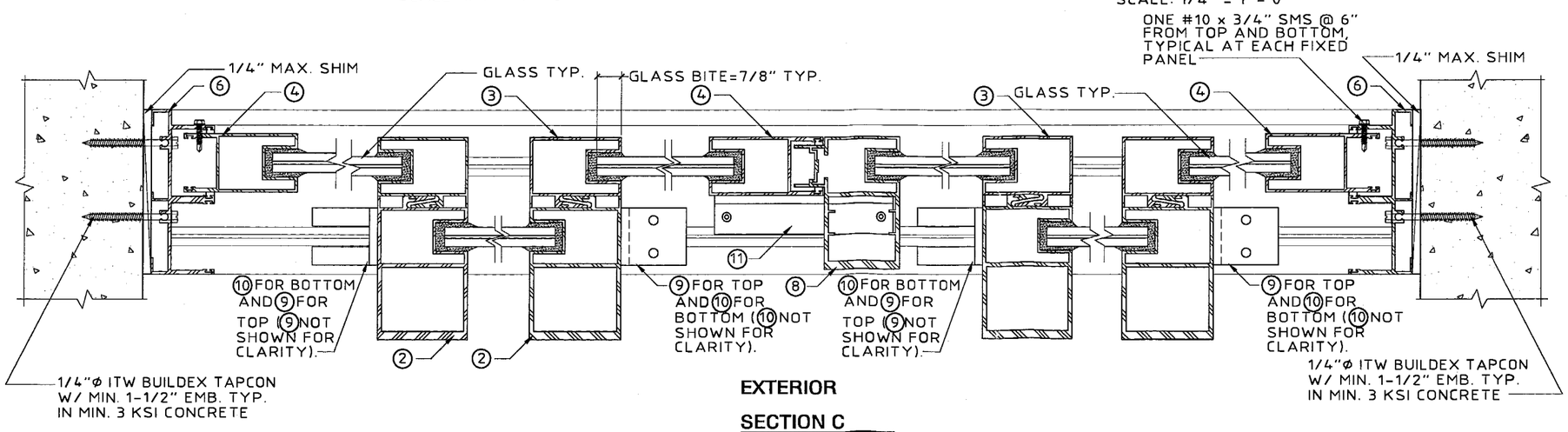

EXTERIOR

SECTION C
SCALE: 3" = 1' - 0"

APPROVED AS COMPLYING WITH THE SOUTH FLORIDA BUILDING CODE
DATE OCTOBER 25, 2001
BY Ishaq I. Chanda
PRODUCT CONTROL DIVISION
BUILDING CODE COMPLIANCE OFFICE
ACCEPTANCE NO. 01-0402.03

KNEZEVICH & ASSOCIATES, INC.
CONSULTING ENGINEERS • PRODUCT TESTING
1260 N. UNIVERSITY DRIVE, SUITE 180 • FORT LAUDERDALE, FL 33322
TEL: (954) 382-2800 • FAX: (954) 382-2989 • FLORIDA COA #3205
WEBSITE: WWW.KNEZEVICH.COM • E-MAIL: KA@KNEZEVICH.COM

COPYRIGHT © 2000 KNEZEVICH & ASSOCIATES, INC.

SLIDING GLASS DOOR SERIES 100

GLASSWALL & DOORS, INC.
3945 N.W. 32nd AVENUE
MIAMI, FLORIDA 33142
TEL: (305) 638-5151 FAX: (305) 638-5158

revisions

no	date	by	description
1	08/03/01	AS	COUNTY COMMENTS
2	09/25/01	AS	COUNTY COMMENTS

V.J. KNEZEVICH
PROFESSIONAL ENGINEER
FL License No: PE 0010983

SEP 25 2001

date 03/27/01
scale AS NOTED
drawn by AV
design by AS
checked by VJK
drawing no. 00-249
sheet 4 of 4