MIAMI-DADE

BUILDING CODE COMPLIANCE OFFICE (BCCO)
PRODUCT CONTROL DIVISION

MIAMI-DADE COUNTY, FLORIDA
METRO-DADE FLAGLER BUILDING
140 WEST FLAGLER STREET, SUITE 1603
MIAMI, FLORIDA 33130-1563
(305) 375-2901 FAX (305) 375-2908

NOTICE OF ACCEPTANCE (NOA)

Master Wall Inc.
211 Quiet Creek Court.
Chelsea MI 48118

SCOPE:

This NOA is being issued under the applicable rules and regulations governing the use of construction materials. The documentation submitted has been reviewed by Miami-Dade County Product Control Division and accepted by the Board of Rules and Appeals (BORA) to be used in Miami Dade County and other areas where allowed by the Authority Having Jurisdiction (AHJ).

This NOA shall not be valid after the expiration date stated below. The Miami-Dade County Product Control Division (In Miami Dade County) and/or the AHJ (in areas other than Miami Dade County) reserve the right to have this product or material tested for quality assurance purposes. If this product or material fails to perform in the accepted manner, the manufacturer will incur the expense of such testing and the AHJ may immediately revoke, modify, or suspend the use of such product or material within their jurisdiction. BORA reserves the right to revoke this acceptance, if it is determined by Miami Dade County Product Control Division that this product or material fails to meet the requirements of the applicable building code.

This product is approved as described herein, and has been designed to comply with the High Velocity Hurricane Zone of the Florida Building Code.

DESCRIPTION: Master Wall Exterior Insulation and Finish System.

APPROVAL DOCUMENT: Drawing No.**S-2069**, Sheets 1 through 5 of 5, titled "Master Wall Inc. Aggre-Flex Class PB EIF System" dated 12/01/00, with last revision on 04/30/02, prepared by RW Building Consultants, Inc. signed and sealed by L. F. Schmidt. PE., bearing the Miami-Dade County Product Control Approval stamp with the NOA number and approval date by the Miami-Dade County Product Control Division.

MISSILE IMPACT RATING: Large and Small Missile.

LABELING: Each component shall bear a permanent label with the manufacturer's name or logo, city, state and following statement: "Miami-Dade County Product Control Approved", unless otherwise noted herein.

RENEWAL of this NOA shall be considered after a renewal application has been filed and there has been no change in the applicable building code negatively affecting the performance of this product.

TERMINATION of this NOA will occur after the expiration date or if there has been a revision or change in the materials, use, and/or manufacture of the product or process. Misuse of this NOA as an endorsement of any product, for sales, advertising or any other purposes shall automatically terminate this NOA. Failure to comply with any section of this NOA shall be cause for termination and removal of NOA.

ADVERTISEMENT: The NOA number preceded by the words Miami-Dade County, Florida, and followed by the expiration date may be displayed in advertising literature. If any portion of the NOA is displayed, then it shall be done in its entirety.

INSPECTION: A copy of this entire NOA shall be provided to the user by the manufacturer or its distributors and shall be available for inspection at the job site at the request of the Building Official.

This NOA consists of this page 1 as well as approval document mentioned above.

The submitted documentation was reviewed by **Candido F. Font PE.**

PRODUCT CONTROL ACCEPTED

MASTER WALL INC.

AGGRE-FLEX™ CLASS PB
EXTERIOR INSULATION AND FINISH SYSTEM (EIFS)

GENERAL NOTES

1. THIS SYSTEM HAS BEEN DESIGNED IN ACCORDANCE WITH THE FLORIDA BUILDING CODE. EDITION AND ITS LATEST SUPPLEMENTS.
2. THIS SYSTEM HAS BEEN TESTED IN ACCORDANCE WITH MIAMI–DADE COUNTY PROTOCOLS PA–202 AND PA–203 FOR STRUCTURAL AND CYCLIC TESTING.
3. THIS SYSTEM SHALL BE APPLIED BY A MASTER WALL CERTIFIED PLASTERING CONTRACTOR, FOLLOWING THIS NOTICE OF ACCEPTANCE, THE RECOMMENDATIONS OF MASTER WALL INC. AND THE APPLICABLE SECTIONS OF THE FLORIDA BUILDING CODE.
4. THE ENGINEER AND/OR ARCHITECT OF RECORD FOR EACH PROJECT USING THIS SYSTEM SHALL DESIGN THE BLOCK OR FRAMED WALL TO ENSURE CONFORMANCE WITH ALL GOVERNING CODES AND THIS DOCUMENT.
5. INSULATION BOARDS SHALL BE POSITIONED IN A RUNNING BOND PATTERN.
6. THE BLOCK OR FRAMED WALL SURFACE SHALL BE DRY, CLEAN AND FREE OF ALL LOOSE DEBRIS PRIOR TO INSTALLING THE SYSTEM.
7. ALL DETAILS THAT FOLLOW IN SHEETS 3 THROUGH 5 ARE TYPICAL AND SHOW INTENT TO PREVENT WATER INFILTRATION INTO AND BEHIND THE SYSTEM. ALTERNATE DETAILS AND SPECIFIC CONDITIONS NOT COVERED BY THE TYPICAL DETAILS ARE THE RESPONSIBILITY OF THE LICENSED DESIGN PROFESSIONAL IN CONSULTATION WITH MASTER WALL INC.

AGGRE–FLEX™ CLASS PB EIF SYSTEM

THE EIFS IS A CLASS OF EXTERIOR INSULATION AND FINISH SYSTEM (EIFS) WHERE MOLDED EXPANDED POLYSTYRENE (MEPS) INSULATION BOARD IS ADHERED AND/OR MECHANICALLY FASTENED TO APPROVED SUBSTRATE. A BASE COAT IS THEN APPLIED OVER THE MEPS INSULATION BOARD AND A REINFORCING MESH IS EMBEDDED INTO THE BASE COAT. ADDITIONAL LAYERS OF BASE COAT AND REINFORCING MESH CAN BE UTILIZED TO INCREASE IMPACT RESISTANCE. THE REINFORCING MATERIAL IS A GLASS FIBER MESH THAT IS COATED TO PROVIDE ALKALI RESISTANCE. A 100% ACRYLIC FINISH COAT, OF VARIOUS THICKNESS, IN A VARIETY OF TEXTURES AND COLORS, ARE APPLIED OVER THE BASE COAT. THE AGGRE–FLEX CLASS PB EIF SYSTEM IS A BARRIER SYSTEM.

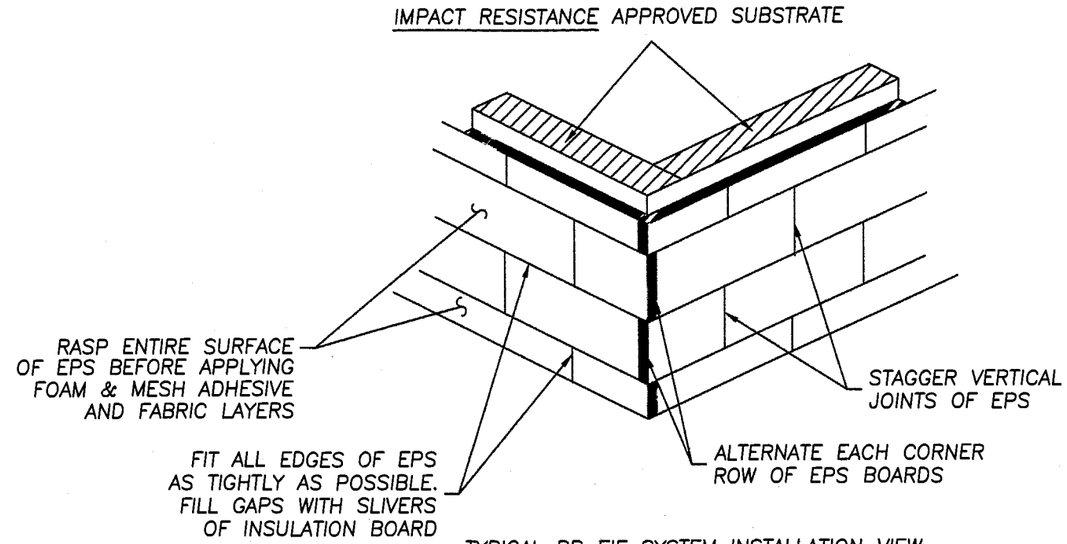

TYPICAL PB EIF SYSTEM INSTALLATION VIEW

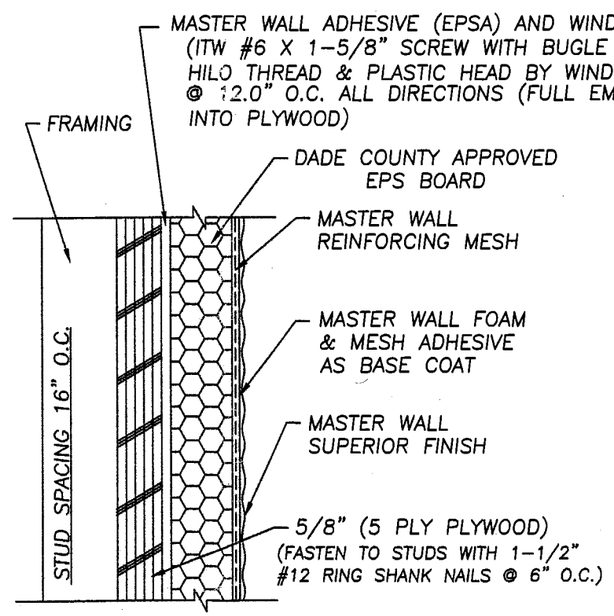

TYPICAL PB EIF SYSTEM CROSS SECTION OVER A FRAMED WALL

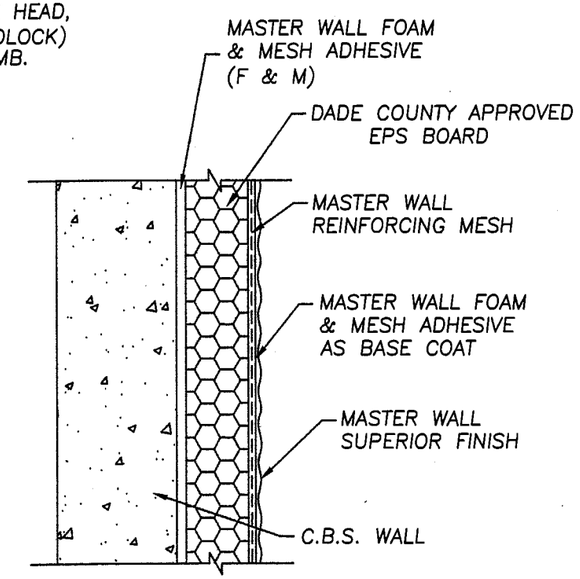

TYPICAL PB EIF SYSTEM CROSS SECTION OVER A BLOCK WALL

TABLE OF CONTENTS

SHEET #	DESCRIPTION
1	GENERAL NOTES, TYPICAL INSTALLATION & SECTIONS
2	BILL OF MATERIALS AND MATERIAL SPECIFICATIONS
3	TYPICAL TERMINATION ON A FRAMED WALL
4	TYPICAL TERMINATION ON A BLOCK WALL
5	TYPICAL WATER PREVENTION DETAILS

Lyndon F. Schmidt
State of Florida
Professional Engineer #43409
April 30, 2002

DESIGN PRESSURE RATING
+ 140 PSF – 140 PSF
INSTALLED OVER AN IMPACT RESISTANCE SUBSTRATE

Approved as complying with the Florida Building Code
Date 05/30/02
NOA# 01-0464.06
Miami Dade Product Control Division
By

MASTER WALL INC.
4705 MILGEN ROAD
COLUMBUS, GA. 31907
PH.706.569.0092

PRODUCT: MASTER WALL INC. AGGRE–FLEX™ CLASS PB EIF SYSTEM

PART OR ASSEMBLY: GENERAL NOTES & TYPICAL INSTALLATION & SECTION

REVISIONS

NO.	DATE		BY
2	4/30/02	GENERAL	RW
1	9/26/01	GENERAL	TJH

RW BUILDING CONSULTANTS, INC.
813.684.3831

DATE: 12/01/00
SCALE: N.T.S.
DWG. BY: TJH
CHK. BY: RW
DRAWING NO.: S–2069
SHEET 1 OF 5

BILL OF MATERIALS & MATERIAL SPECIFICATIONS

1. ADHESIVE:

A. MASTER WALL INC. FOAM & MESH (F & M) ADHESIVE: AN ACRYLIC-BASED PRODUCT MIXED ONE-TO-ONE BY WEIGHT WITH PORTLAND CEMENT FOR USE AS THE ADHESIVE TO BOND INSULATION BOARD TO AN APPROVED SUBSTRATE. (CONCRETE/CMU SUBSTRATES.)
APPLY USING A 3/8" NOTCHED TROWEL WITH THE RIBBONS NO FURTHER THAN 3/4" O.C.
APPLY A 2" WIDE BY 3/8" HIGH RIBBON AROUND THE ENTIRE PERIMETER OF THE INSULATION BOARD.
PLACE 8 DABS OF THE ADHESIVE 3/8" THICK BY 4" IN DIAMETER APPROXIMATELY 8" O.C. INSIDE THE RIBBON.

B. EXPANDED POLYSTYRENE ADHESIVE (EPSA).: A WATER-BASED COPOLYMER ADHESIVE FORMULATED TO BOND MEPS INSULATION BOARD TO PLYWOOD. (FOR WOOD BASED SHEATHING)
APPLY USING A 3/8" NOTCHED TROWEL WITH THE RIBBONS NO FURTHER THAN 3/4" O.C. COVER THE ENTIRE BACK OF THE INSULATION BOARD WITH FULL BEADS THAT STAND OUT 3/8" FROM THE INSULATION BOARD.

2. INSULATION BOARD: THE BOARD IS A MOLDED EXPANDED POLYSTYRENE FOAM BOARD, (MEPS). IT SHALL MEET OR EXCEED ASTM C-578 AND MASTER WALL INC. REQUIREMENTS FOR MEPS. THE MEPS HAS A NOMINAL 1.0 pcf OF AGED EXPANDED POLYSTYRENE.
FLAME SPREAD AND SMOKE DEVELOPMENT SHALL BE 25 AND 450 OR LESS, RESPECTIVELY, PER ASTM E-84. THE MAXIMUM SIZE SHALL BE 2' x 4' UP TO 4" THICK.
(APACHE PRODUCTS CO. – EPS-EXPANDED POLYSTYRENE INSULATION, NOA NO. 01-1108.09)

3. BASE COAT:

A. MASTER WALL INC. FOAM & MESH (F & M) ADHESIVE: AN ACRYLIC-BASED PRODUCT MIXED ONE-TO-ONE BY WEIGHT WITH PORTLAND CEMENT DESIGNED FOR USE WITH REINFORCING MESH AS THE BASE COATING OVER THE INSULATION BOARD.
(APPLY THE BASE COAT WITH A SMOOTH TROWEL OVER THE ENTIRE SURFACE OF THE INSULATION BOARD AT A DEPTH OF 1/16". IMMEDIATELY EMBED THE MESH INTO THE WET BASE COAT AND SMOOTH FROM THE CENTER TO THE EDGE TO AVOID WRINKLES. ALLOW TO CURE FOR 24 HOURS.)

4. REINFORCING MESH:

A. DETAIL MESH: NOMINAL 4.5oz./sq. yd. OPEN WEAVE GLASS FIBER FABRIC, TREATED FOR ALKALINE RESISTANCE AND COMPATIBILITY WITH MASTER WALL BASE COATS, AND CONFORMING TO ASTM D-76, D-579, D-5035 AND MIL-Y-1140.

B. STANDARD MESH: NOMINAL 4.5oz./sq. yd. OPEN WEAVE GLASS FIBER FABRIC, TREATED FOR ALKALINE RESISTANCE AND COMPATIBILITY WITH MASTER WALL BASE COATS, AND CONFORMING TO ASTM D-76, D-579, D-5035 AND MIL-Y-1140.

5. FINISH:

A. SUPERIOR FINISH: MASTER WALL INC.'S SUPERIOR FINISHES ARE 100% ACRYLIC-BASED WALL COATINGS AVAILABLE IN A VARIETY OF COLORS AND TEXTURES.
(APPLY A UNIFORM 1/16" THICKNESS WITH A SMOOTH TROWEL. IMMEDIATELY FLOAT THE FINISH COAT USING A PLASTIC FLOAT TO THE DESIRED TEXTURE. PROTECT THE FINISH FROM RAIN AND TEMPERATURES LESS THAN 40 DEGREES FAHRENHEIT FOR A MINIMUM 24 HOURS.)

6. SEALANT: LOW MODULUS, ONE COMPONENT SILICONE COMPLYING WITH ASTM D920-94, TYPE S, GRADE NS CLASS 25 OR TWO COMPONENT POLYURETHANE COMPLYING WITH ASTM D920-94, TYPE M, GRADE NS, CLASS 25: MOVEMENT CAPABILITY OF +/- 25% OR GREATER. BACKER ROD USED IN CONJUNCTION WITH SEALANTS SHALL BE CLOSED-CELL TYPE COMPLYING WITH ASTM C509-94, SIZED 33% LARGER THAN THE JOINT OPENING.
(CONSULT SPECIFIC SEALANT MANUFACTURERS FOR PRIMER REQUIREMENTS, DETAILS AND SPECIFICATIONS.)

7. TRIM: MANUFACTURED OF EXTERIOR GRADE POLYVINYL CHLORIDE COMPLYING WITH ASTM D1748.

8. CORROSION RESISTANT FASTENERS: THE WIND-DEVIL 2 SHALL BE USED WHEN FASTENING THE INSULATION TO PLYWOOD SUBSTRATE.

9. THIS SYSTEM IS NOT TO BE USED ON HORIZONTAL SURFACES EXPOSED TO WEATHER EXCEPT AS A SOFFIT, IT IS INTENDED TO BE USED ON WALL SYSTEMS ONLY.

NOTES:

1. BACKWRAPPING: TACK OR ADHESIVELY FASTEN THE REINFORCING MESH TO THE SUBSTRATE POSITIONED SO THAT A MINIMUM OF 2 1/2" OF THE MESH IS ONTO THE SUBSTRATE. THE REINFORCING MESH SHALL BE WIDE ENOUGH TO ENCAPSULATE THE EDGE OF THE INSULATION BOARD AND COVER BOTH THE SUBSTRATE AND THE FACE OF THE INSULATION BOARD A MINIMUM OF 2 1/2".
AFTER THE INSULATION BOARD IS APPLIED, COMPLETE THE BACKWRAPPING PROCEDURE BY APPLYING THE BASE COAT AND EMBEDDING THE REMAINING MESH AND RETURNING IT ONTO THE FACE OF THE INSULATION BOARD.
WHERE SEALANTS ARE APPLIED, THE REINFORCING MESH COLOR SHALL NOT BE VISIBLE AND THE TEXTURE OF THE BASE COAT SHALL BE SMOOTH SO THAT THE PATTERN OF THE MESH IS COVERED.

2. FINISHING: CORROSION-RESISTANT MATERIAL SLOPED TOWARD THE EXTERIOR WITH AN UPTURNED LEG ON THE INTERIOR SIDE AND AT THE ENDS. FLASHING SHALL EXTEND BEYOND THE SURFACE OF THE EXTERIOR WALL FINISH.

3. DETAILS SHOWN ON SHEETS 3 THOUGH 5 ARE TO BE USED TO PREVENT WATER INFILTRATION AND NOT TO CHANGE THE APPROVED SYSTEM SHOWN ON SHEETS 1 AND 2.

4. ALL ROOFING DETAILS SHALL CONFORM TO CHAPTER 15 OF THE FLORIDA BUILDING CODE.

Lyndon F. Schmidt
State of Florida
Professional Engineer #43409
April 30, 2002

Approved as complying with the Florida Building Code
Date 05/30/02
NOA# 01-0404.06
Miami Dade Product Control Division
By

MASTER WALL INC.
4705 MILGEN ROAD
COLUMBUS, GA. 31907
PH.706.569.0092

PRODUCT: MASTER WALL INC. AGGRE-FLEX™ CLASS PB EIF SYSTEM

PART OR ASSEMBLY: BILL OF MATERIALS & MATERIALS SPESIFICATIONS

REVISIONS

NO.	DATE		BY
2	4/30/02	GENERAL	RW
1	9/26/01	GENERAL	TJH

RW BUILDING CONSULTANTS, INC.
813.684.3831

DATE: 12/01/00
SCALE: N.T.S.
DWG. BY: TJH
CHK. BY: RW
DRAWING NO.: S-2069
SHEET 2 OF 5

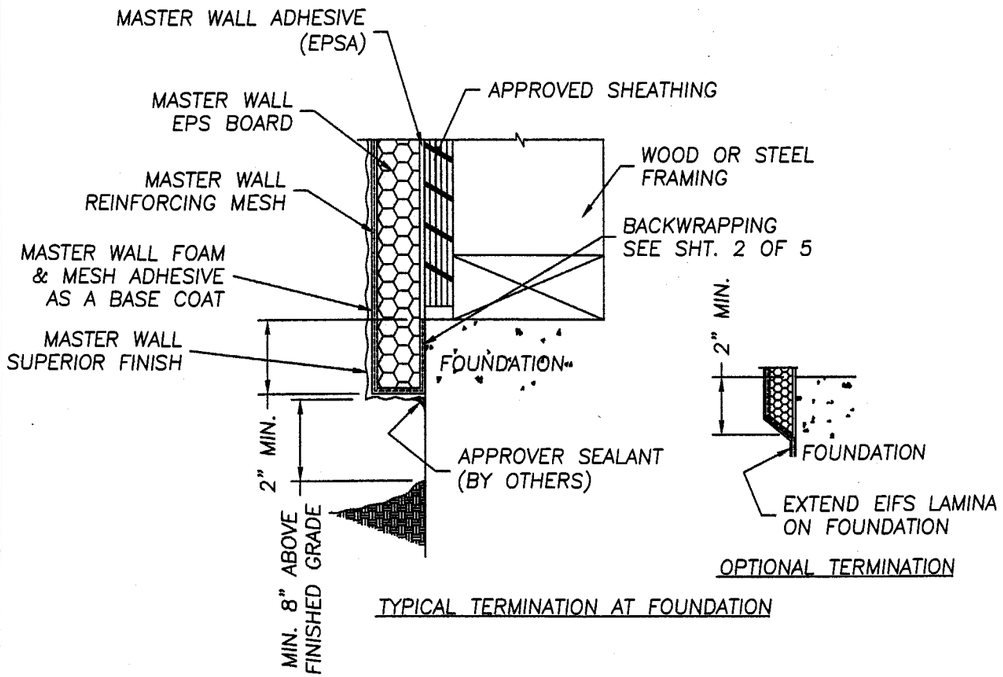

TYPICAL TERMINATION AT FOUNDATION

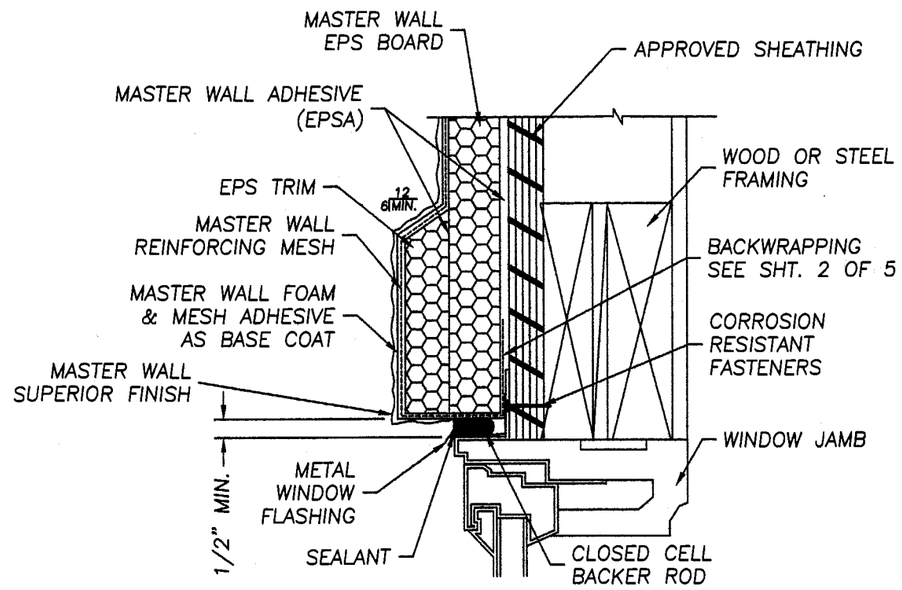

TERMINATION AT WINDOW HEAD (WITH TRIM)

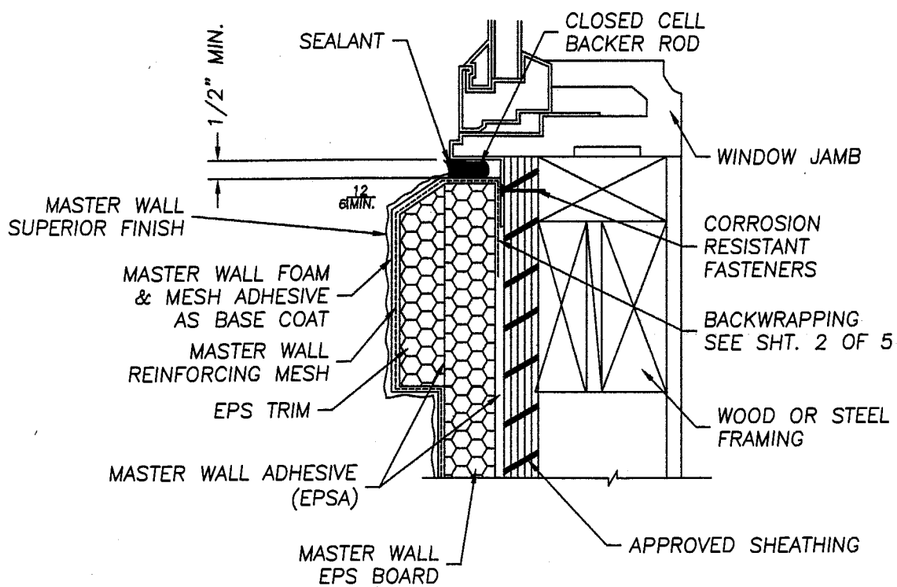

TERMINATION AT WINDOW SILL (WITH TRIM)

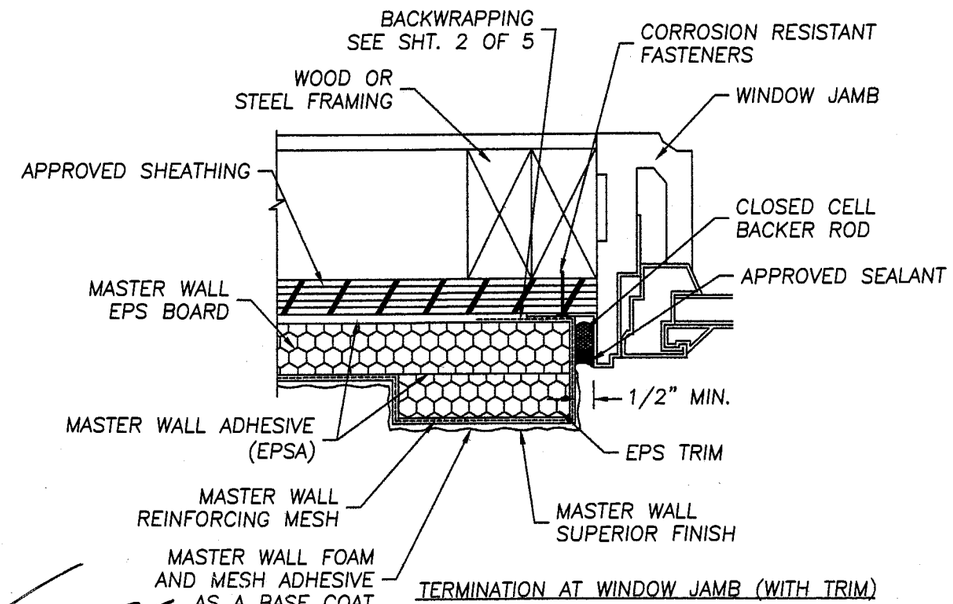

TERMINATION AT WINDOW JAMB (WITH TRIM)

Lyndon F. Schmidt
State of Florida
Professional Engineer #43409
April 30, 2002

Approved as complying with the Florida Building Code
Date 05/30/02
NOA# 01-0404.05
Miami Dade Product Control Division
By

MASTER WALL INC.
4705 MILGEN ROAD
COLUMBUS, GA. 31907
PH.706.569.0092

PRODUCT: MASTER WALL INC. AGGRE-FLEX™ CLASS PB EIF SYSTEM

PART OR ASSEMBLY: TYPICAL TERMINATION ON A FRAMED WALL, SECTIONS

REVISIONS

NO.	DATE		BY
2	4/30/02	GENERAL	RW
1	9/26/01	GENERAL	TJH

RW BUILDING CONSULTANTS, INC.
813.684.3831

DATE: 12/01/00
SCALE: 1/4" = 1"
DWG. BY: TJH
CHK. BY: RW
DRAWING NO.: S-2069
SHEET 3 OF 5

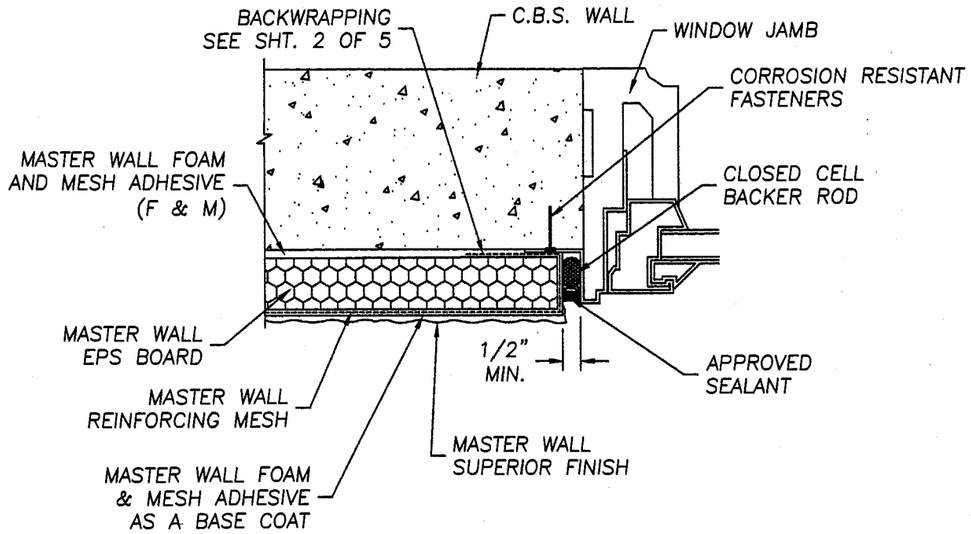

TERMINATION AT WINDOW JAMB (NO TRIM)

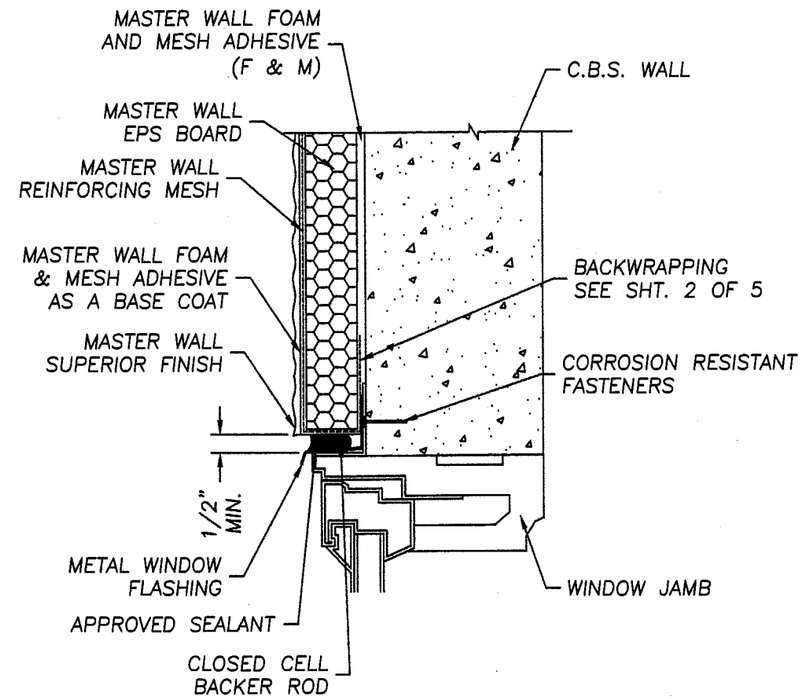

TERMINATION AT WINDOW HEAD (NO TRIM)

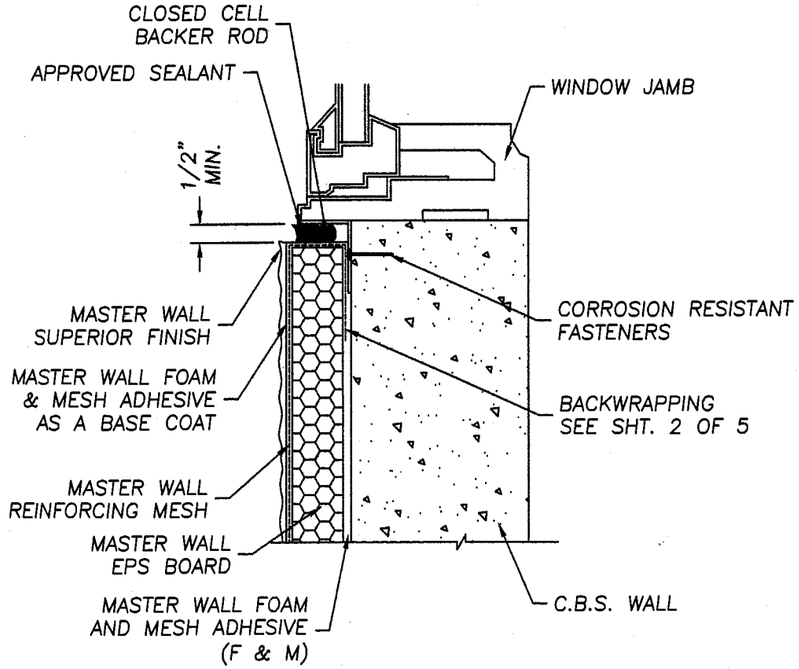

TERMINATION AT WINDOW SILL (NO TRIM)

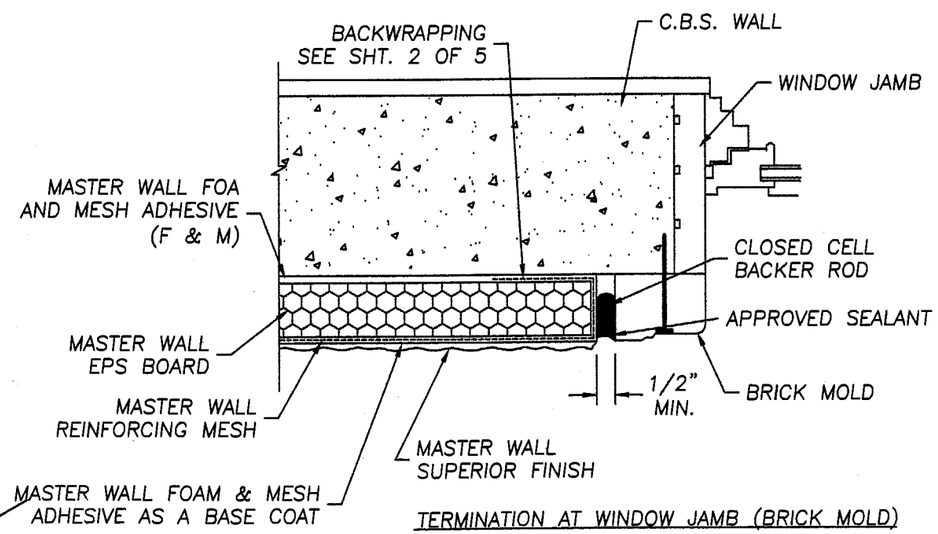

TERMINATION AT WINDOW JAMB (BRICK MOLD)

Lyndon F. Schmidt
State of Florida
Professional Engineer #43409
April 30, 2002

Approved as complying with the
Florida Building Code
Date 05/30/02
NOA# 01-0404.06
Miami Dade Product Control
Division
By

MASTER WALL INC.
4705 MILGEN ROAD
COLUMBUS, GA. 31907
PH.706.569.0092

PRODUCT:
MASTER WALL INC.
AGGRE-FLEX™ CLASS PB
EIF SYSTEM

PART OR ASSEMBLY:
TYPICAL TERMINATION ON
A BLOCK WALL, SECTIONS

REVISIONS

NO.	DATE	BY
2	4/30/02	RW
1	9/26/01	TJH
	GENERAL	GENERAL

RW BUILDING CONSULTANTS, INC.
813.684.3831

DATE: 12/01/00
SCALE: 1/4" = 1"
DWG. BY: TJH
CHK. BY: RW
DRAWING NO.: S-2069
SHEET 4 OF 5

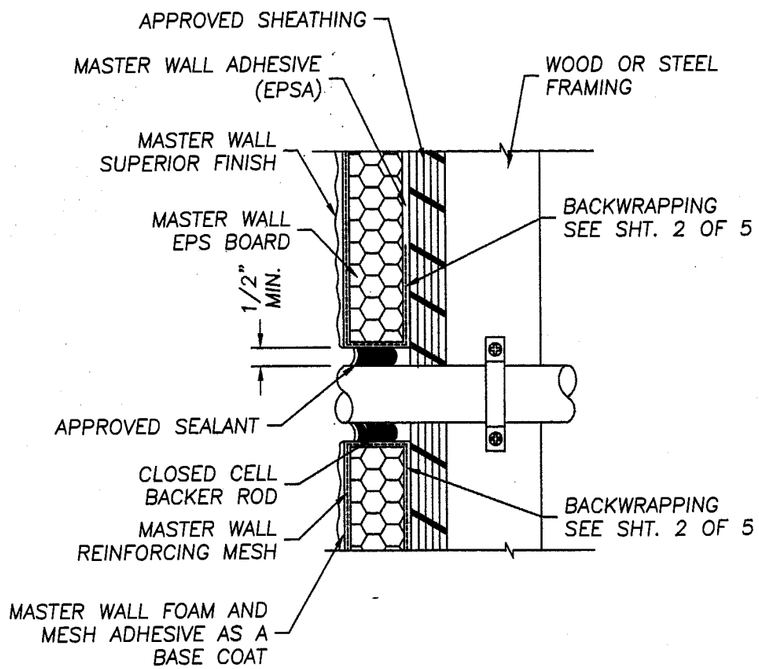

TYPICAL PENETRATION THRU WALL
SCALE: 1/4" = 1"

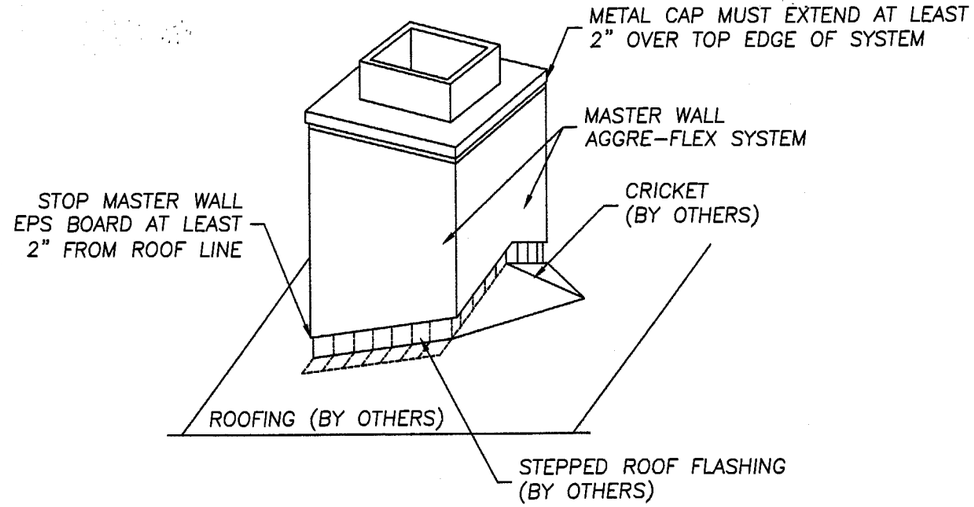

TYPICAL DETAIL AT CHIMNEY CRICKET
N.T.S.

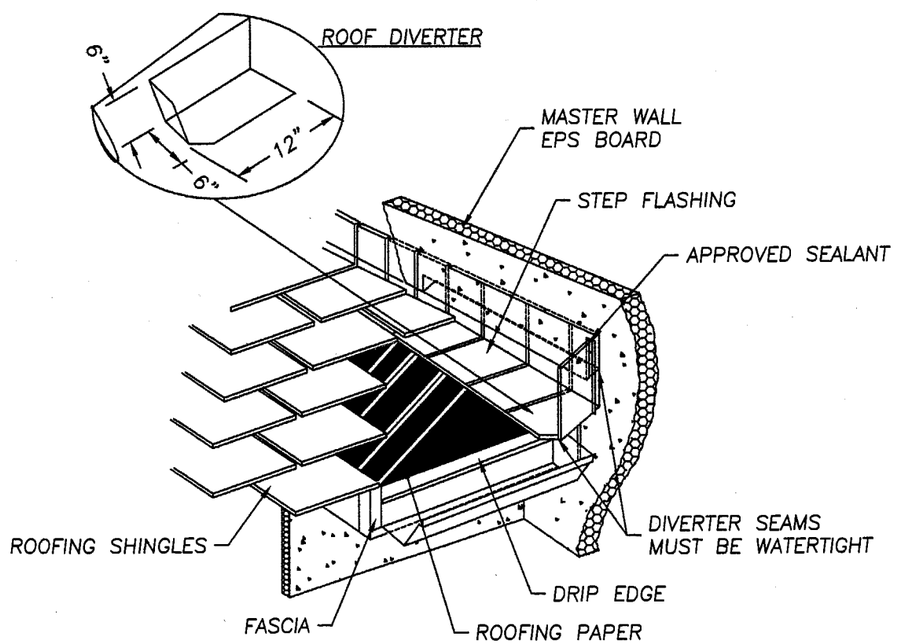

TYPICAL ROOF TO WALL FLASHING WITH DIVERTER
N.T.S.

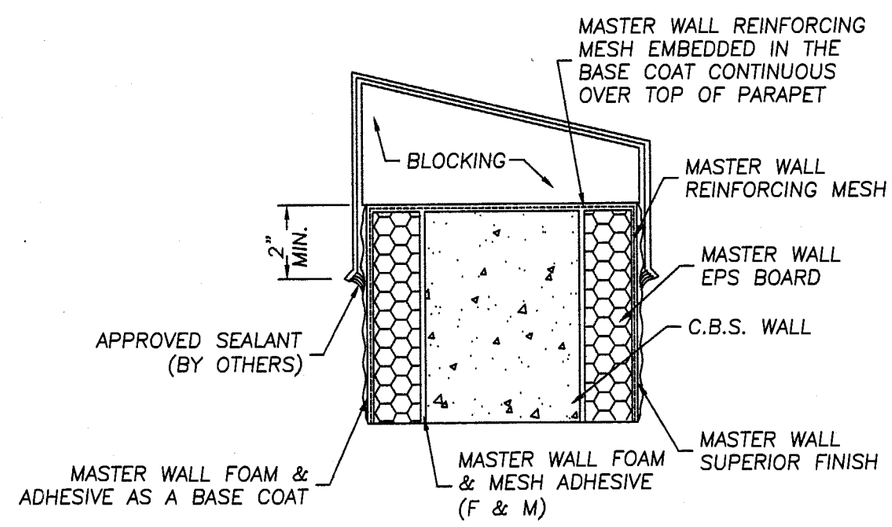

TYPICAL PARAPET WITH METAL CAP
SCALE: 1/4" = 1"

Lyndon F. Schmidt
State of Florida
Professional Engineer #43409
April 30, 2002

Approved as complying with the Florida Building Code
Date 05/30/02
NOA# 01-0404.06
Miami Dade Product Control Division
By

MASTER WALL INC.
4705 MILGEN ROAD
COLUMBUS, GA. 31907
PH.706.569.0092

PRODUCT: MASTER WALL INC. AGGRE-FLEX™ CLASS PB EIF SYSTEM

PART OR ASSEMBLY: TYPICAL SECTIONS & WATER PREVENTION DETAILS

REVISIONS

NO.	DATE	BY
2	4/30/02	RW
1	9/26/01	TJH
	GENERAL	
	GENERAL	

RW BUILDING CONSULTANTS, INC.
813.684.3831

DATE: 12/01/00
SCALE: AS NOTED
DWG. BY: TJH
CHK. BY: RW
DRAWING NO.: S-2069
SHEET 5 OF 5