MIAMI-DADE

MIAMI-DADE COUNTY, FLORIDA
METRO-DADE FLAGLER BUILDING

BUILDING CODE COMPLIANCE OFFICE
METRO-DADE FLAGLER BUILDING
140 WEST FLAGLER STREET, SUITE 1603
MIAMI, FLORIDA 33130-1563
(305) 375-2901 FAX (305) 375-2908

CONTRACTOR LICENSING SECTION
(305) 375-2527 FAX (305) 375-2558

CONTRACTOR ENFORCEMENT DIVISION
(305) 375-2966 FAX (305) 375-2908

PRODUCT CONTROL DIVISION
(305) 375-2902 FAX (305) 372-6339

PRODUCT CONTROL NOTICE OF ACCEPTANCE

Rol-Spec, Inc.
18239 Tayport Drive
Charlotte ,NC 28278

Your application for Notice of Acceptance (NOA) of:
Rol-Spec Extruded Aluminum Roll-Up Shutter
under Chapter 8 of the Code of Miami-Dade County governing the use of Alternate Materials and Types of Construction, and completely described herein, has been recommended for acceptance by the Miami-Dade County Building Code Compliance Office (BCCO) under the conditions specified herein.

This NOA shall not be valid after the expiration date stated below. BCCO reserves the right to secure this product or material at any time from a jobsite or manufacturer's plant for quality control testing. If this product or material fails to perform in the approved manner, BCCO may revoke, modify, or suspend the use of such product or material immediately. BCCO reserves the right to revoke this approval, if it is determined by BCCO that this product or material fails to meet the requirements of the South Florida Building Code.

The expense of such testing will be incurred by the manufacturer.

ACCEPTANCE NO.: 01-0404.12
EXPIRES: 04/16/2006

Raul Rodriguez
Chief Product Control Division

THIS IS THE COVERSHEET, SEE ADDITIONAL PAGES FOR SPECIFIC AND GENERAL CONDITIONS
BUILDING CODE & PRODUCT REVIEW COMMITTEE

This application for Product Approval has been reviewed by the BCCO and approved by the Building Code and Product Review Committee to be used in Miami-Dade County, Florida under the conditions set forth above.

Francisco J. Quintana, R.A.
Director
Miami-Dade County
Building Code Compliance Office

APPROVED: 05/31/2001

NOTICE OF ACCEPTANCE: SPECIFIC CONDITIONS

1 SCOPE:

This renews the Notice of Acceptance No. 98-0310.01 that was issued on 04/16/98. It approves an extruded aluminum roll-up type shutter, as described in Section 2 of this Notice of Acceptance, designed to comply with the South Florida Building Code, (S.F.B.C.) 1994 Edition for Miami-Dade County, for the locations where the pressure requirements, as determined by S.F.B.C. Chapter 23, do not exceed the design pressure rating values indicated in the approved drawings.

2 PRODUCT DESCRIPTION:

The **Rol-Spec Extruded Aluminum Roll-Up Shutter** and its components shall be constructed in strict compliance with the following documents: Drawing No. **92-162**, titled "Roll-Up Shutter", prepared by Knezevich and Associates, Inc., dated 09/14/95, with latest revision on 03/04/98, signed and sealed by V.J. Knezevich, bearing the Miami-Dade County Product Control approval stamp with the Notice of Acceptance number and approval date. These documents shall herein after be referred to as the approved drawings.

3 LIMITATIONS:

All permanent set components, included but not limited to embedded anchor bolts, threaded cones, metal shields, headers and sills, must be protected against corrosion, contamination and damage at all times.

4 INSTALLATION:

4.1 The extruded aluminum Roll-Up Shutter and its component shall be installed in strict compliance with the approved drawing

5 LABELING:

Each unit shall bear a permanent label with the manufacturer's name or logo, city, state and the following statement: "Miami-Dade County Product Control Approved"

6 BUILDING PERMIT REQUIREMENTS:

6.1 Application for Building Permit shall be accompanied by copies of the following:

- **6.1.1** This Notice of Acceptance
- **6.1.2** Duplicate copies of the approved drawings, as identified in Section 2 of this Notice of Acceptance, clearly marked to show the components selected for the proposed installation.
- **6.1.3** Any other document required by the Building Official or the South Florida Building Code in order to evaluate the installation of this system.

Manuel Perez, PE, Product Control Examiner
Product Control Division

Rol-Spec, Inc.

ACCEPTANCE NO: 01-0404.12

APPROVED: MAY 3 1 2001

EXPIRES: 04/16/2006

NOTICE OF ACCEPTANCE: STANDARD CONDITIONS

1 Renewal of this Acceptance (approval) shall be considered after a renewal application has been filed and the original submitted documents, including test-supporting data, engineering documents, are no older than eight (8) years.

2. Any and all approved products shall be permanently labeled with the manufacturer's name, city, state, and the following statement: "Miami-Dade County Product Control Approval", or as specifically stated in the specific conditions of this Acceptance.

3. Renewals of Acceptance will not be considered if:
   a. There has been a change in the South Florida Building Code affecting the evaluation of this product and the product is not in compliance with the code changes.
   b. The product is no longer the same product (identical) as the one originally approved.
   c. If the Acceptance holder has not complied with all the requirements of this acceptance, including the correct installation of the product.
   d. The engineer who originally prepared, signed and sealed the required documentation initially submitted, is no longer practicing the engineering profession.

4. Any revision or change in the materials, use, and/or manufacture of the product or process shall automatically be cause for termination of this Acceptance, unless prior written approval has been requested (through the filing of a revision application with appropriate fee) and granted by this office.

5. Any of the following shall also be grounds for removal of this Acceptance:
   a. Unsatisfactory performance of this product or process.
   b. Misuse of this Acceptance as an endorsement of any product, for sales, advertising or any other purposes.

6. The Notice of Acceptance number preceded by the words Miami-Dade County, Florida, and followed by the expiration date may be displayed in advertising literature. If any portion of the Notice of Acceptance is displayed, then it shall be done in its entirety.

7. A copy of this Acceptance as well as approved drawings and other documents, where it applies, shall be provided to the user by the manufacturer or its distributors and shall be available for inspection at the job site at all time. The engineer need not reseal the copies.

8. Failure to comply with any section of this Acceptance shall be cause for termination and removal of Acceptance.

9. This Notice of Acceptance consists of pages 1, 2 and this last page 3.

END OF THIS ACCEPTANCE

Manuel Perez, PE, Product Control Examiner
Product Control Division

Rol-Spec, Inc.

ACCEPTANCE NO: 01-0404.12

APPROVED: MAY 3 1 2001

EXPIRES: 04/16/2006

NOTICE OF ACCEPTANCE: EVIDENCE SUBMITTED:

A. DRAWING:

1. Drawing No. 94-162, "Roll-Up Shutters", Sheets 1 through 6 of 6, prepared by Knezevich and Associates, Inc., dated 09/14/95, revised on 03/04/98, signed and sealed by V.J. Knezevich, PE.

B. TEST:

1. Test report on Uniform Static Air Pressure Test per PA 202, Large Missile Impact Test per PA 201 and Cyclic Loading Wind Pressure Test per PA 203 of Roll-Up Shutters with extruded aluminum slats prepared by Construction Research Laboratory, Report No. CRL-S1035, dated 12/20/94, signed and sealed by V.N. Tolat, PE.
2. Test report on Uniform Static Air Pressure Test per PA 202, Large Missile Impact Test per PA 201 and Cyclic Loading Wind Pressure Test per PA 203 of Roll-Up Shutter with extruded aluminum slats with different widths for Comparative Analysis prepared by Construction Research Laboratory, Inc., Report No. CRL-S1036B, dated 04/04/95, signed and sealed by V.N. Tolat, PE.

C. CALCULATIONS:

1. Comparative Analysis and Anchor Calculations dated 03/14/95, pages 1 through 24 of 24, prepared by Knezevich and Associates, Inc., signed and sealed by V.J. Knezevich, PE.
2. Prying Action Control and Anchors Design dated March, 1998, pages 1 through 11 of 11, prepared by Knezevich and Associated, Inc., signed and sealed by V.J. Knezevich, PE.

D. MATERIAL CERTIFICATION:

1. Mill Certification for aluminum ally 6063-T6 of Chemical Composition and Physical Properties prepared by Tifton Aluminum, dated 11/30/94.

E. STATEMENTS

1. No change letter issued by Rol-Spec., Inc. with no date and signed by J. M. La Rocca.

Manuel Perez, PE, Product Control Examiner
Product Control Division

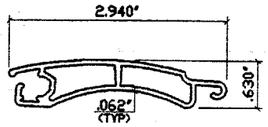

① TYP. BLADE

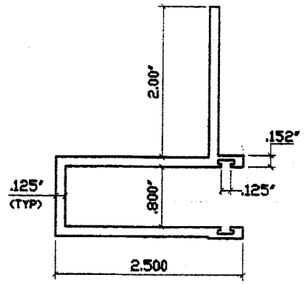

② "L" TRACK

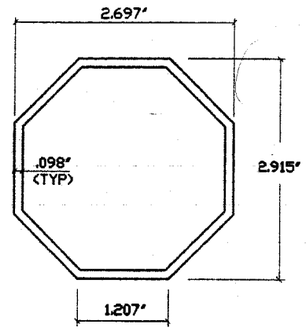

③ OCTAGONAL SHAFT
(SLAT REEL)

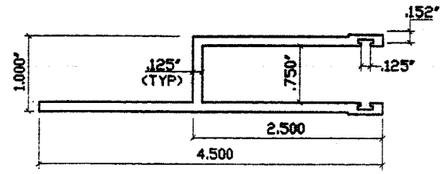

④ "H" TRACK

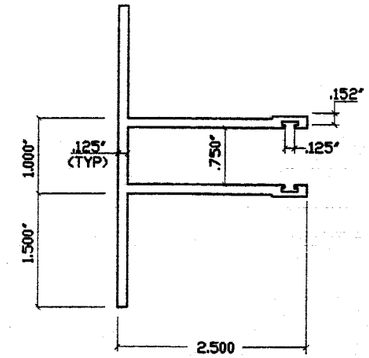

⑤ "T" TRACK

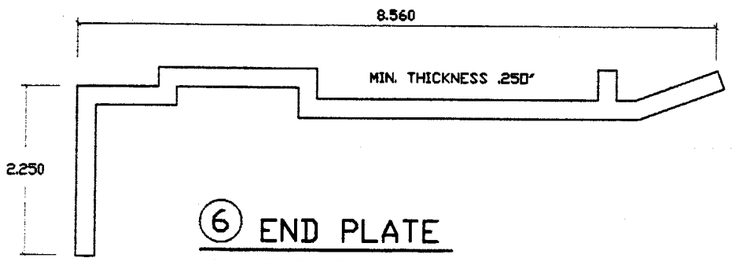

⑥ END PLATE
16 GA. GALVANIZED STEEL

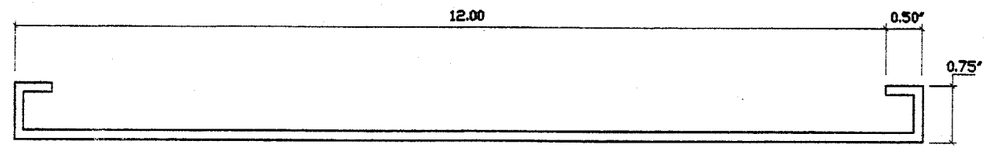

⑦ FASCIA PANEL
16 GA. GALVANIZED STEEL

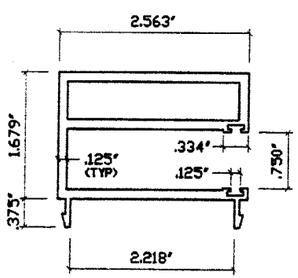

⑧ SIDE TRACK

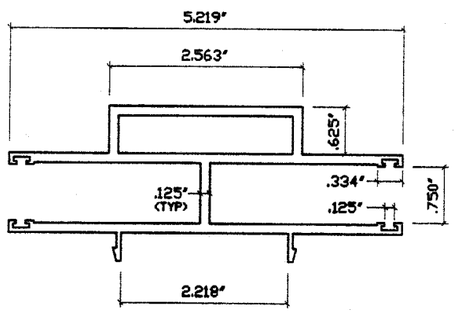

⑨ DOUBLE TRACK

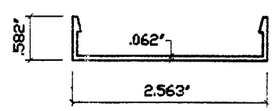

⑩ SNAP COVER

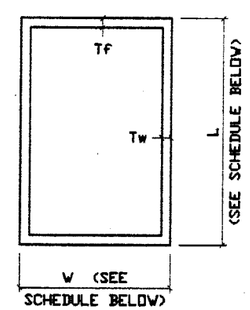

MULLION
⑪ ⑫ ⑬ ⑭ ⑮

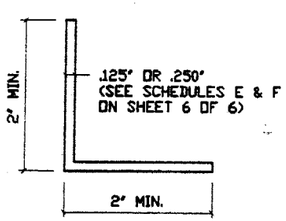

⑯ ANGLE

MULLION SCHEDULE A				
MEMBER MARK	W (INCHES)	L (INCHES)	Tf (INCHES)	Tw (INCHES)
11	2	2	.125	.125
12	2	3	.125	.125
13	2	4	.125	.125
14	4	2	.125	.125
15	2	5	.125	.125

PRODUCT RENEWED
ACCEPTANCE NO. 01-0404.12
EXPIRATION DATE 04/16/2006
BY Manuel Perez
PRODUCT CONTROL DIVISION
BUILDING CODE COMPLIANCE OFFICE

APPROVED AS COMPLYING WITH THE SOUTH FLORIDA BUILDING CODE
DATE APRIL 16 1998
BY Manuel Perez
PRODUCT CONTROL DIVISION
BUILDING CODE COMPLIANCE OFFICE
ACCEPTANCE NO. 98-0310.01

KNEZEVICH & ASSOCIATES, INC.
CONSULTING ENGINEERS • PRODUCT TESTING
641 MOKENA DRIVE • MIAMI SPRINGS, FLORIDA 33166
MIAMI (305) 883-9571 FT. LAUDERDALE (954) 677-9500
FAX: (305) 883-9572

COPYRIGHT 1998 KNEZEVICH & ASSOCIATES, INC.

ROLL-UP SHUTTER

ROL-SPEC. INC.
7246 S.W. 42nd STREET
MIAMI, FL 33155
(305) 267-8197

revisions			
no	date	by	description
1	92-09-25		COUNTY COMMENTS
2	93-12-95		SPAN SCHEDULES ADD.
3	93-04-9025		ANCHOR DESIGN

V.J. KNEZEVICH
PROFESSIONAL ENGINEER
FL License No:
PE 0010983

MAR 04 1998

date 9-14-95
scale AS NOTED
drawn by MC
design by VJK
checked by VJK
drawing no. 94-162
sheet 1 of 6

03/04/98 16:20

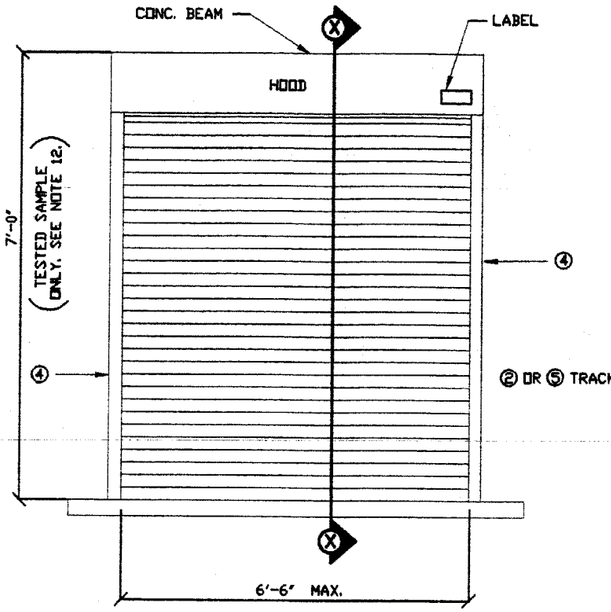

SHUTTER ELEVATION
WALL MOUNT

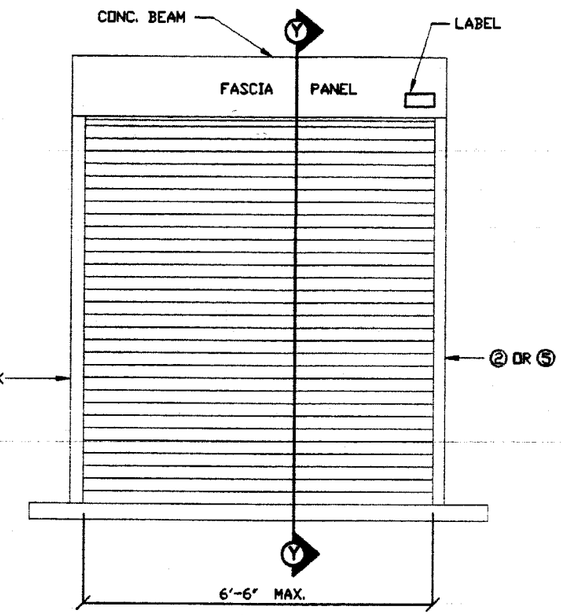

SHUTTER ELEVATION
INSIDE MOUNT

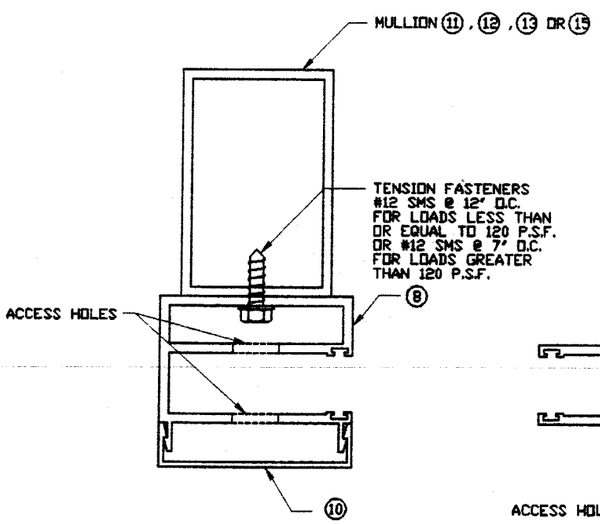

(A) SIDE TRACK TO MULLION

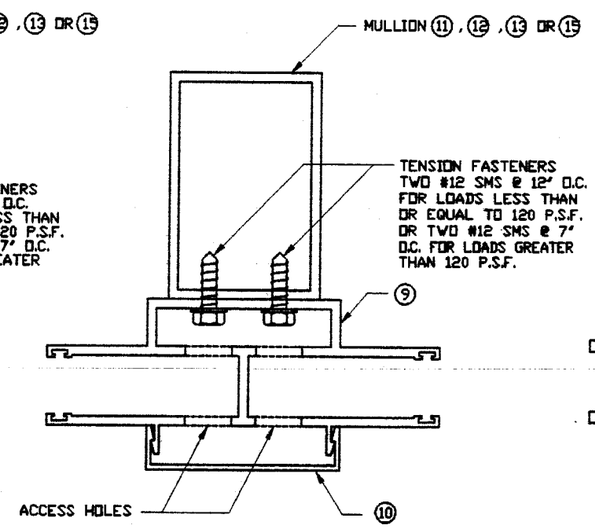

(B1) DOUBLE TRACK TO MULLION

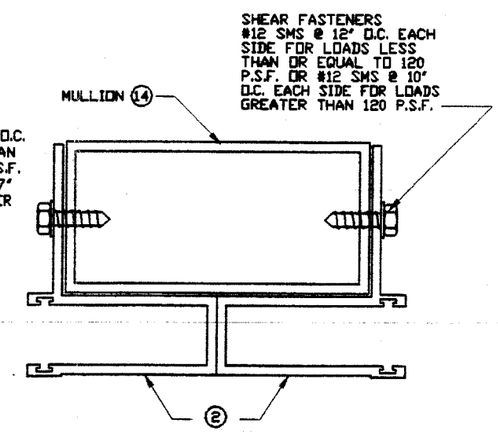

(B2) "L" TRACK TO MULLION

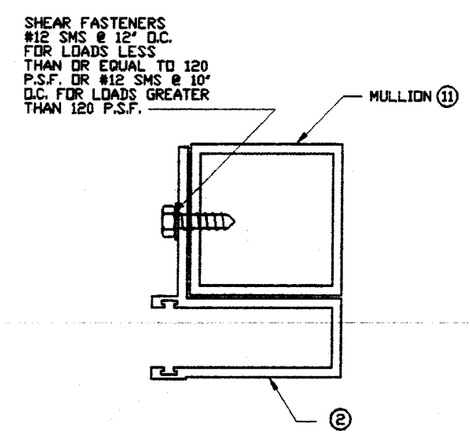

(B3) "L" TRACK TO MULLION

TYP. TRACK TO MULLION
CONNECTION DETAILS
HALF SIZE

NOTES:

1. THESE ROLL-DOWN SHUTTER SYSTEMS ARE DESIGNED IN ACCORDANCE WITH THE SOUTH FLORIDA BUILDING CODE, 1994 EDITION, AND THE 1994 BROWARD COUNTY EDITION.
2. POSITIVE AND NEGATIVE DESIGN PRESSURE CALCULATIONS SHALL BE PERFORMED IN ACCORDANCE WITH ASCE 7-88 'MINIMUM DESIGN LOADS FOR BUILDINGS AND OTHER STRUCTURES.'
3. ALL EXTRUSIONS SHALL BE 6063-T6 ALUMINUM ALLOY, U. D. N.
4. EACH SHUTTER SHALL BE PERMANENTLY LABELED AS FOLLOWS:
   ROLL-SPEC., INC.
   MIAMI, FLORIDA
   DADE COUNTY PROD. APPRD.
5. ALL BOLTS AND WASHERS SHALL BE 410 STAINLESS STEEL W/ FLUOROCARBON COATING WITH A MINIMUM Fy = 33 KSI.
6. FASCIA PANEL (INSIDE MOUNT); 16 GA. GALV. STEEL ASTM A 527. HOOD (WALL MOUNT); .040" THICK ALUMINUM SHEET (3003-H14).
7. MATERIAL SPECIFICATIONS NOTED HEREIN ARE THE MANUFACTURER'S REPRESENTATION OF MATERIALS TO BE USED IN PRODUCT TESTING.
8. THE DETAILS AND SPECIFICATIONS SHOWN HEREIN REPRESENT THE PRODUCTS PROPOSED FOR IMPACT, CYCLIC AND UNIFORM STATIC AIR PRESSURE TESTING IN CONFORMANCE WITH DADE COUNTY PROTOCOLS, PA 201, 202, AND 203.
9. THE DADE COUNTY CERTIFIED TESTING LABORATORY PERFORMING THESE TESTS SHALL ACKNOWLEDGE THE SATISFACTORY COMPLETION OF SUCH TESTS AND VERIFY THE PRODUCTS TESTED ARE AS NOTED HEREIN.
10. ONE 5/16" BEAD OF CURING SEALANT WAS APPLIED BETWEEN ALL TRACKS AND AMSONRY JAMBS.
11. THIS SHUTTER SLAT MAY BE INSTALLED IN EITHER DIRECTION, W/ EITHER THE CONVEX OR CONCAVE SIDE OF THE SLAT PROFILE FACING OUT.
12. THE MAX. CLEAR SPAN OF THIS SHUTTER IS 6'-6" AND IT APPLIES TO ALL MOUNTING CONDITIONS SHOWN IN THESE DWGS. THERE IS NO HEIGHT LIMIT AS LONG AS APPROVED DESIGN LOADS AND RESPECTIVE SPANS SHOWN ON SCHEDULE 'D' (SHEET 6 OF 6) ARE USED.
13. **THE PRODUCT APPRVD. DWGS. MAY NOT BE USED FOR PERMITTING UNLESS SEALED BY ROL-SPEC. INC.**

PRODUCT RENEWED
ACCEPTANCE No. 01-0404.12
EXPIRATION DATE 04/16/2006
By Manuel Perez
PRODUCT CONTROL DIVISION
BUILDING CODE COMPLIANCE OFFICE

APPROVED AS COMPLYING WITH THE SOUTH FLORIDA BUILDING CODE
DATE APRIL 16 1998
BY Manuel Perez
PRODUCT CONTROL DIVISION
BUILDING CODE COMPLIANCE OFFICE
ACCEPTANCE NO. 98-0310.01

KNEZEVICH & ASSOCIATES, INC.
CONSULTING ENGINEERS • PRODUCT TESTING
641 MOKENA DRIVE-MIAMI SPRINGS, FLORIDA 33166
MIAMI (305) 883-9571 FT. LAUDERDALE (954) 677-9500
FAX: (305) 883-9572
COPYRIGHT 1998 KNEZEVICH & ASSOCIATES, INC.

ROLL-UP SHUTTER

ROL-SPEC. INC.
7246 S.W. 42nd STREET
MIAMI, FL 33155
(305) 267-8197

revisions			
no	date	by	description
1	02-09-95		COUNTY COMMENTS
2	03-13-95		SPAN SCHEDULES ADD.
3	03-04-98	ZS	ANCHOR DESIGN

V.J. KNEZEVICH
PROFESSIONAL ENGINEER
FL License No: PE 0010983
MAR 04 1998

date 9-14-95
scale AS NOTED
drawn by MC
design by VJK
checked by VJK
drawing no. 94-162
sheet 2 of 6

03/04/98 16:20

TENSION / SHEAR	ANCHOR SCHEDULE B FOR GUIDES ②④⑤⑧⑨ FASTENER SPACING REQUIRED		
EXISTING STRUCTURE	CONCRETE	HOLLOW BLOCK	WOOD FRAMING
ANCHOR TYPE	ITW TAPCON	ITW TAPCON	LAG
DIAMETER	1/4"	1/4"	1/4"
MIN. EMBEDMENT	1-1/4"	1-1/4"	1-1/2"
SPACING FOR LOADS LESS THAN OR EQUAL TO 120 P. S. F.	12" / 6"	6" / 6"	6" / 6"
SPACING FOR LOADS GREATER TO 120 P. S. F.	5" / 6"	3" / 6"	N/A

- MIN. EMBED. EXCLUDES WALL FINISH OR STUCCO.
- ALL FASTENERS ANCHORED TO CONCRETE OR HOLLOW BLOCK MUST HAVE A MIN. EDGE DIST. OF 2"
- ANCHORS IN WOOD MUST HAVE A MIN. EDGE DIST. OF 3/4".

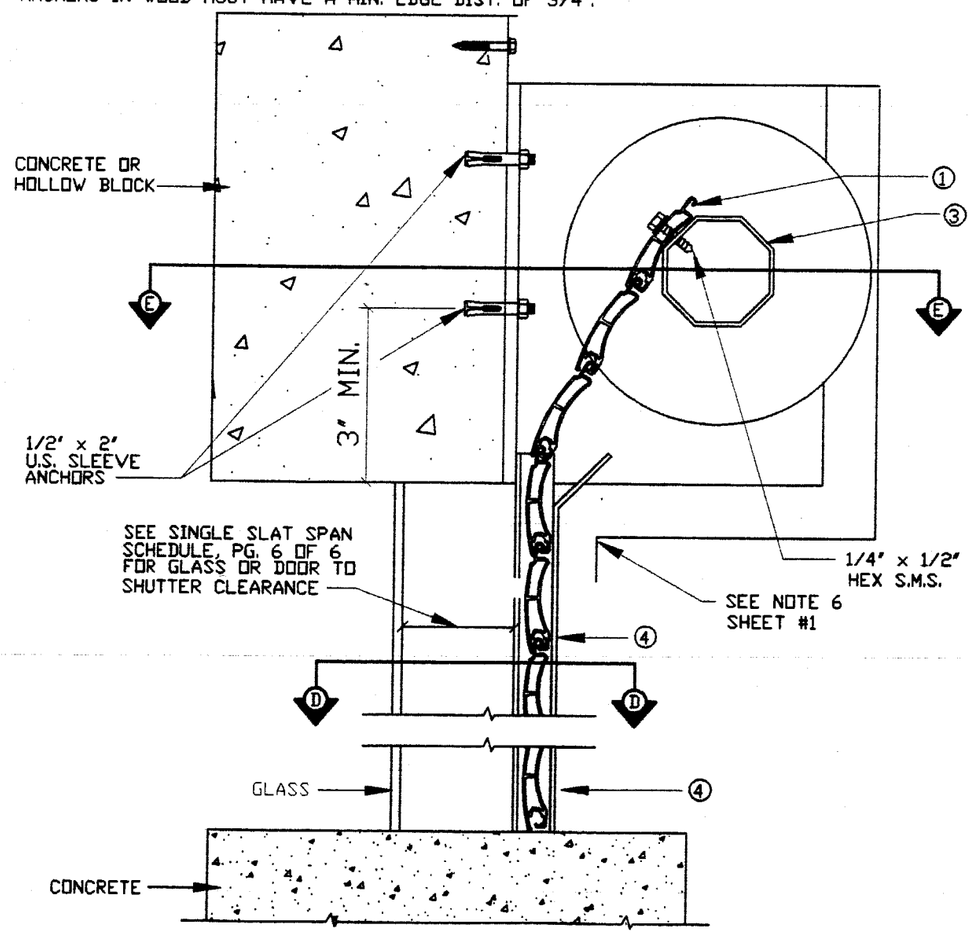

SECTION X-X
WALL MOUNT/"H"-TRACK SCALE : 3" = 1'-0"

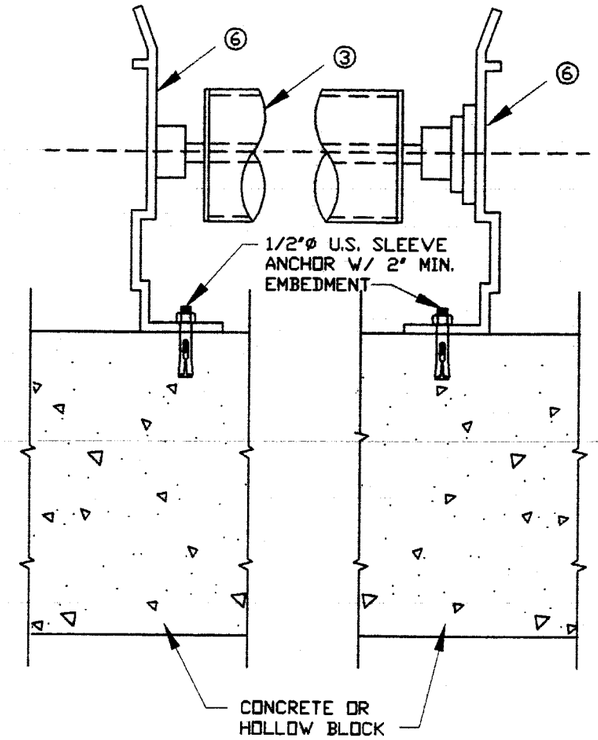

END-PLATE/PLAN/SECT. E-E
WALL MOUNT SCALE : 3" = 1'-0"

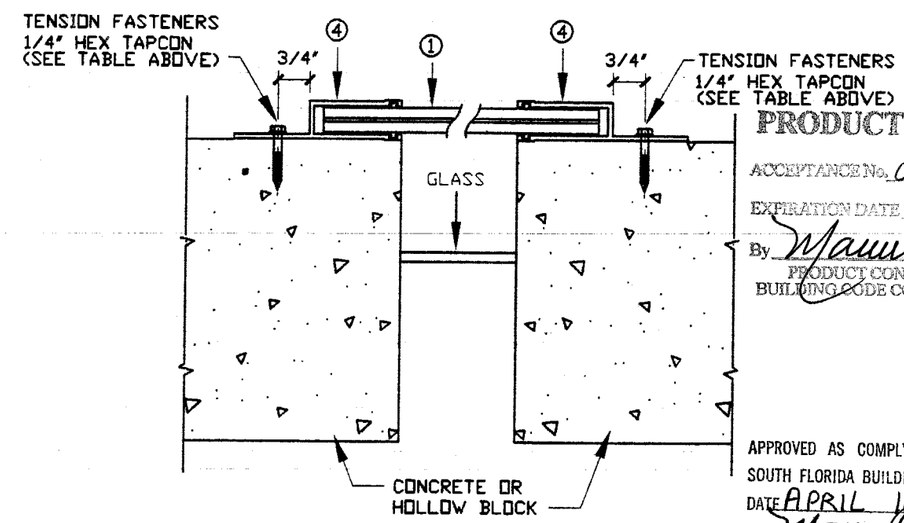

"H"-TRACK PLAN/SECT. D-D
WALL MOUNT SCALE : 3" = 1'-0"

PRODUCT RENEWED
ACCEPTANCE No. 01-0404.12
EXPIRATION DATE 04/16/2006
By
PRODUCT CONTROL DIVISION
BUILDING CODE COMPLIANCE OFFICE

APPROVED AS COMPLYING WITH THE SOUTH FLORIDA BUILDING CODE
DATE APRIL 16 1998
BY
PRODUCT CONTROL DIVISION
BUILDING CODE COMPLIANCE OFFICE
ACCEPTANCE NO. 98-0310.01

KNEZEVICH & ASSOCIATES, INC.
CONSULTING ENGINEERS • PRODUCT TESTING
641 MOKENA DRIVE-MIAMI SPRINGS, FLORIDA 33166
MIAMI (305) 883-9571 FT. LAUDERDALE (954) 677-9500
FAX: (305) 883-9572

COPYRIGHT 1998 KNEZEVICH & ASSOCIATES, INC.

ROLL-UP SHUTTER

ROL-SPEC. INC.
7246 S.W. 42nd STREET
MIAMI, FL 33155
(305) 267-8197

revisions			
No	date	by	description
1	02-09-95		COUNTY COMMENTS
2	03-13-95		SPAN SCHEDULES ADD.
3	03-04-98	ZS	ANCHOR DESIGN

V.J. KNEZEVICH
PROFESSIONAL ENGINEER
FL License No: PE 0010983

MAR 04 1998

date	9-14-95
scale AS NOTED	drawn by MC
design by VJK	checked by VJK
drawing no. 94-162	
sheet 3 of 6	

03/04/98 16:20

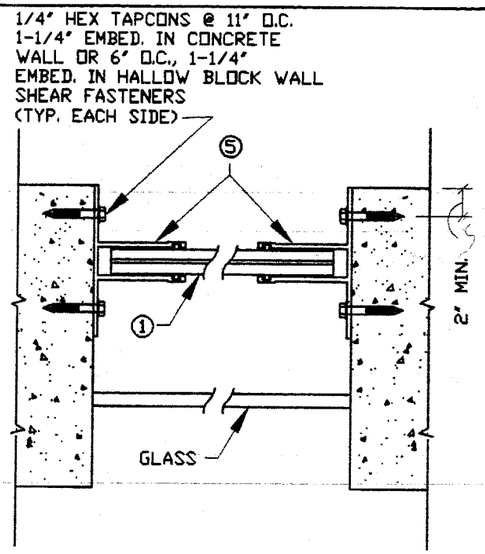

"T"-TRACK PLAN/SECT. A-A
INSIDE MOUNT SCALE : 3" = 1'-0"

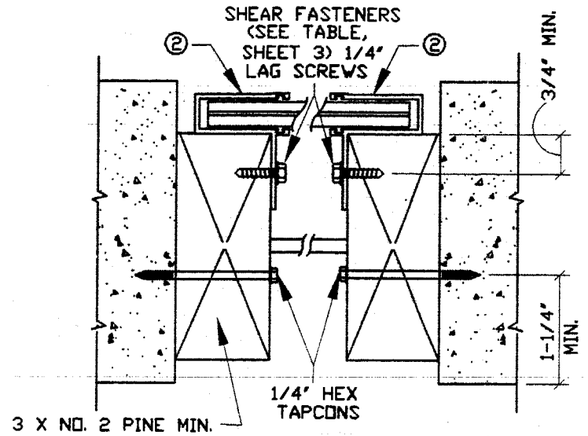

"L"-TRACK PLAN/SECT. B-B
INSIDE MOUNT SCALE : 3" = 1'-0"

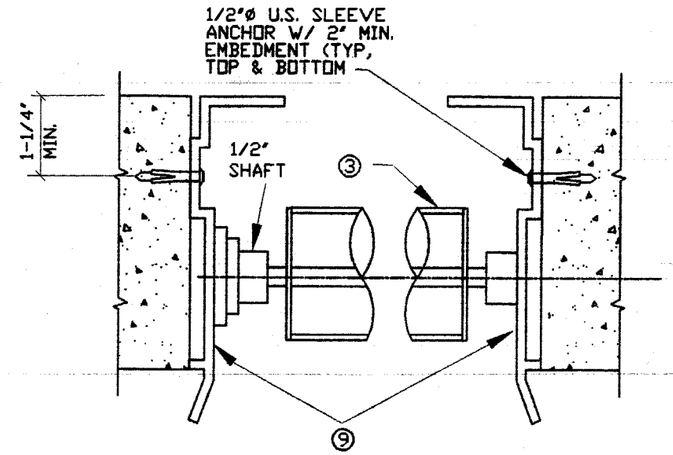

END-PLATE/PLAN/SECT. C-C SCALE : 3" = 1'-0"

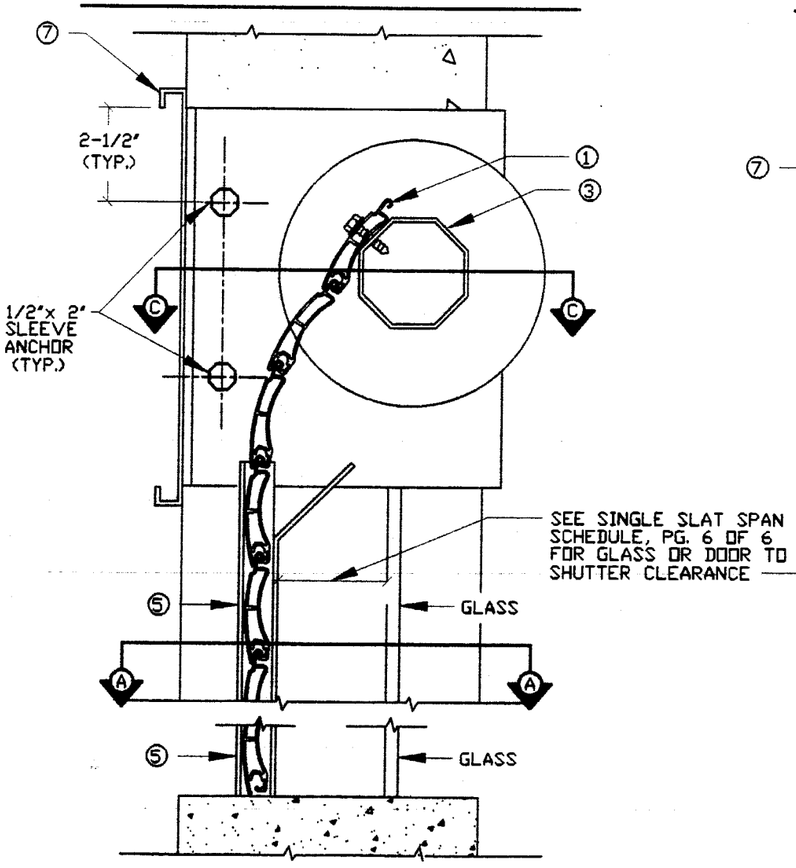

SECTION Y-Y
INSIDE MOUNT/"T"-TRACK SCALE : 3" = 1'-0"

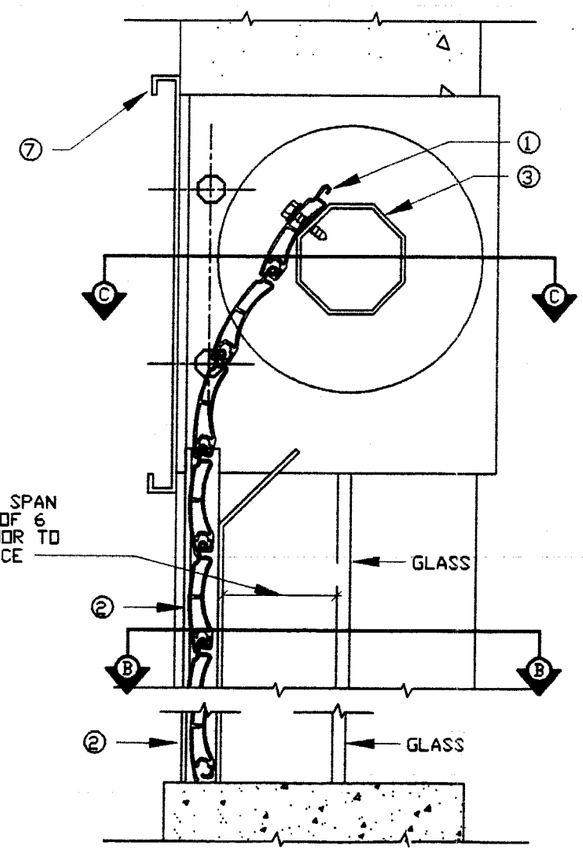

ALTERNATE SECTION Y-Y
INSIDE MOUNT/"L"-TRACK SCALE : 3" = 1'-0"

PRODUCT RENEWED
ACCEPTANCE No. 01-0409.12
EXPIRATION DATE 04/16/2006
By Manuel Perez
PRODUCT CONTROL DIVISION
BUILDING CODE COMPLIANCE OFFICE

APPROVED AS COMPLYING WITH THE
SOUTH FLORIDA BUILDING CODE
DATE APRIL 16 1998
BY Manuel Perez
PRODUCT CONTROL DIVISION
BUILDING CODE COMPLIANCE OFFICE
ACCEPTANCE NO. 98-0310.01

KNEZEVICH & ASSOCIATES, INC.
CONSULTING ENGINEERS • PRODUCT TESTING
641 MOKENA DRIVE-MIAMI SPRINGS, FLORIDA 33166
MIAMI (305) 883-9571 FT. LAUDERDALE (954) 677-9500
FAX: (305) 883-9572
COPYRIGHT 1998 KNEZEVICH & ASSOCIATES, INC.

ROLL-UP SHUTTER

ROL-SPEC. INC.
7246 S.W. 42nd STREET
MIAMI, FL 33155
(305) 267-8197

revisions

no	date	by	description
1	02-09-95		COUNTY COMMENTS
2	03-13-95		SPAN SCHEDULES ADD.
3	03-04-98	ZS	ANCHOR DESIGN

V.J. KNEZEVICH
PROFESSIONAL ENGINEER
FL License No:
PE 0010983

MAR 04 1998

date 9-14-95	
scale AS NOTED	drawn by MC
design by VJK	checked by VJK
drawing no. 94-162	
sheet 4 of 6	

03/04/98 16:21

PERMANENT MULLION SPAN SCHEDULE C

NEGATIVE DESIGN LOAD (P.S.F.)	SELECT SLAT SPAN (INCHES)	MULLION - MAX. LENGTH (INCHES)									
		MULLION TYPE									
		11 2" x 2"	11 END REACTION (POUNDS)	12 2" x 3"	12 END REACTION (POUNDS)	13 2" x 4"	13 END REACTION (POUNDS)	14 4" x 2"	14 END REACTION (POUNDS)	15 2" x 3"	15 END REACTION (POUNDS)
40	45	54	402	75	557	95	706	66	489	114	850
	51	52	432	72	598	92	757	63	525	110	912
	57	51	460	70	638	89	807	61	560	107	973
	63	49	488	68	676	86	856	60	593	104	1031
	69	48	515	66	713	84	903	58	626	101	1088
	75	47	541	65	750	82	949	57	658	99	1144
	81	46	567	63	785	80	994	55	689	96	1198
50	41	52	441	72	611	91	773	63	536	109	932
	47	50	476	69	660	87	835	60	579	105	1006
	53	48	510	67	707	84	895	58	620	101	1078
	59	47	543	65	752	82	952	57	660	98	1147
	65	45	575	63	796	79	1008	55	699	96	1214
	71	44	606	61	839	77	1062	54	737	93	1280
	77	43	636	60	881	75	1115	52	773	91	1344
60	37	50	475	69	658	87	832	61	577	105	1003
	43	48	515	66	714	84	904	58	626	101	1089
	49	46	554	64	768	81	972	56	674	97	1171
	55	45	592	62	820	78	1038	54	720	94	1251
	61	43	629	60	871	76	1103	53	764	91	1328
	67	42	664	58	920	74	1165	51	808	89	1403
	73	41	699	57	968	72	1226	50	850	87	1477
70	34	48	505	67	699	85	885	59	613	102	1066
	40	46	550	64	763	81	965	56	669	98	1163
	46	44	595	62	824	78	1043	54	723	94	1256
	52	43	637	60	883	75	1117	52	775	91	1346
	58	42	678	58	940	73	1189	51	825	88	1433
	64	40	718	56	995	71	1259	49	873	86	1517
	70	39	757	55	1049	69	1328	48	920	83	1599
80	32	47	532	65	736	83	932	57	646	99	1123
	38	45	583	62	807	79	1022	55	708	95	1231
	44	43	632	60	875	76	1108	52	768	91	1334
	50	42	679	58	940	73	1190	51	825	88	1434
	56	40	724	56	1003	71	1270	49	881	85	1530
	62	39	768	54	1064	69	1347	48	934	83	1623
	68	38	811	53	1124	67	1423	46	986	80	1714
90	30	46	556	64	770	81	975	56	676	97	1175
	36	44	612	61	848	77	1074	53	744	93	1294
	42	42	666	58	923	74	1168	51	810	89	1407
	48	41	717	56	994	71	1258	49	872	86	1516
	54	39	767	54	1063	69	1346	48	933	83	1621
	60	38	815	53	1130	67	1430	46	992	80	1723
	66	37	862	51	1195	65	1512	45	1048	78	1822
100	28	45	579	62	802	79	1015	55	704	95	1223
	34	43	640	59	886	75	1122	52	778	91	1352
	40	41	698	57	967	72	1224	50	849	87	1475
	46	40	754	55	1045	69	1322	48	917	83	1593
	52	38	808	53	1119	67	1417	46	982	81	1707
	58	37	860	51	1192	65	1508	45	1046	78	1817
	64	36	911	50	1262	63	1597	44	1107	76	1924
110	39	40	728	56	1009	70	1278	49	886	85	1539
	43	39	769	54	1065	69	1348	48	935	83	1624
	47	38	808	53	1120	67	1417	46	983	81	1708
	51	37	847	52	1173	65	1485	45	1029	79	1789
	55	36	884	51	1225	64	1551	44	1075	77	1868
	59	36	921	50	1276	63	1615	43	1120	76	1946
	63	35	957	49	1326	62	1678	43	1164	74	2022
120	38	39	757	55	1049	69	1328	48	921	83	1600
	42	38	800	53	1109	67	1404	47	973	81	1691
	46	37	842	52	1167	66	1477	45	1024	79	1780
	50	37	883	51	1224	64	1549	44	1074	77	1867
	54	36	924	49	1280	63	1620	43	1123	75	1951
	58	35	963	48	1334	61	1689	43	1171	74	2034
	62	34	1001	47	1387	60	1756	42	1218	72	2116
130	36	39	785	54	1087	68	1376	47	954	82	1658
	40	38	830	52	1151	66	1456	46	1010	80	1755
	44	37	875	51	1213	64	1535	45	1064	77	1849
	48	36	919	50	1273	63	1611	44	1117	76	1941
	52	35	961	48	1332	61	1686	43	1169	74	2031
	56	34	1003	47	1390	60	1759	42	1220	72	2119
	60	34	1044	47	1446	59	1831	41	1269	71	2206
140	35	38	807	53	1118	67	1416	46	982	81	1706
	39	37	856	51	1186	65	1501	45	1041	78	1809
	43	36	904	50	1252	63	1585	44	1099	76	1909
	47	35	950	49	1316	62	1666	43	1155	74	2007
	51	34	995	48	1378	60	1745	42	1210	73	2102
	55	34	1039	47	1439	59	1822	41	1263	71	2195
	59	33	1082	46	1499	58	1898	40	1316	70	2286

NOTE: INTERPOLATE FOR MULLION SPANS AND REACTIONS BETWEEN THOSE SHOWN.

PERMANENT MULLION SPAN SCHEDULE C

NEGATIVE DESIGN LOAD (P.S.F.)	SELECT SLAT SPAN (INCHES)	MULLION - MAX. LENGTH (INCHES)									
		MULLION TYPE									
		11 2" x 2"	11 END REACTION (POUNDS)	12 2" x 3"	12 END REACTION (POUNDS)	12 2" x 4"	13 END REACTION (POUNDS)	14 4" x 2"	14 END REACTION (POUNDS)	15 2" x 3"	15 END REACTION
150	34	38	828	52	1147	66	1452	46	1007	80	1749
	38	37	879	51	1218	64	1542	44	1069	77	1858
	42	36	930	49	1288	62	1630	43	1130	75	1964
	46	35	978	48	1355	61	1716	42	1190	73	2067
	50	34	1026	47	1421	59	1799	41	1247	72	2168
	54	33	1072	46	1486	58	1881	40	1304	70	2266
	58	32	1118	45	1549	57	1961	39	1359	69	2362
160	32	37	847	52	1174	65	1486	45	1030	79	1790
	36	36	902	50	1249	63	1581	44	1096	76	1905
	40	35	955	49	1322	62	1674	43	1161	74	2017
	44	34	1006	47	1394	60	1764	42	1223	72	2125
	48	33	1056	46	1463	59	1852	41	1284	71	2231
	52	33	1105	45	1531	57	1938	40	1343	69	2334
	56	32	1153	44	1597	56	2022	39	1402	68	2435
170	31	37	866	51	1200	65	1519	45	1053	78	1830
	35	36	923	49	1279	63	1619	43	1122	75	1950
	39	35	979	48	1356	61	1716	42	1190	73	2068
	43	34	1032	47	1430	59	1811	41	1255	71	2181
	47	33	1085	46	1503	58	1903	40	1319	70	2292
	51	32	1136	45	1574	56	1993	39	1381	68	2400
	55	32	1186	44	1643	55	2080	38	1442	66	2504
180	30	36	884	51	1225	64	1550	44	1075	77	1868
	34	35	944	49	1307	62	1655	43	1147	75	1994
	38	34	1002	47	1388	60	1757	42	1218	72	2116
	42	33	1058	46	1466	58	1856	41	1286	70	2235
	46	33	1113	45	1542	57	1952	40	1353	69	2351
	50	32	1166	44	1616	56	2046	39	1418	67	2465
	54	31	1219	43	1689	55	2138	38	1482	65	2576
190	29	36	901	50	1248	63	1580	44	1096	76	1904
	33	35	964	48	1335	61	1690	42	1172	74	2036
	37	34	1024	47	1419	59	1796	41	1245	72	2164
	41	33	1083	46	1500	58	1899	40	1317	70	2288
	45	32	1140	45	1580	56	2000	39	1386	68	2409
	49	31	1196	43	1657	55	2097	38	1454	66	2520
	53	31	1251	43	1733	54	2193	37	1521	64	2605
200	28	36	917	50	1271	63	1609	44	1116	76	1938
	32	35	983	48	1361	61	1723	42	1195	73	2076
	36	34	1046	46	1449	59	1834	41	1271	71	2209
	40	33	1107	45	1534	57	1941	40	1346	69	2339
	44	32	1167	44	1616	56	2046	39	1418	67	2465
	48	31	1225	43	1697	54	2148	38	1489	65	2565
	52	30	1281	42	1775	53	2244	37	1558	63	2653
210	34	34	1034	47	1433	59	1814	41	1257	71	2185
	37	33	1083	46	1500	58	1899	40	1317	70	2288
	40	32	1130	45	1566	57	1982	39	1374	68	2388
	43	32	1177	44	1630	55	2064	38	1431	67	2487
	46	31	1223	43	1694	54	2144	38	1487	65	2562
	49	30	1267	42	1756	53	2223	37	1541	63	2632
	52	30	1312	42	1817	52	2283	36	1595	62	2700
220	33	33	1053	46	1459	59	1847	41	1281	71	2225
	36	33	1104	45	1529	57	1936	40	1342	69	2332
	39	32	1153	44	1597	56	2022	39	1402	68	2436
	42	31	1201	43	1664	55	2107	38	1461	66	2528
	45	31	1249	43	1730	54	2190	37	1518	64	2603
	48	30	1295	42	1794	53	2262	37	1575	62	2675
	51	30	1341	41	1858	51	2321	36	1630	61	2745
230	32	33	1072	46	1485	58	1880	40	1303	70	2265
	35	32	1124	45	1557	57	1971	39	1367	68	2375
	38	32	1175	44	1628	56	2061	38	1429	67	2483
	41	31	1225	43	1697	54	2149	38	1490	65	2566
	44	30	1274	42	1765	53	2234	37	1549	63	2642
	47	30	1322	41	1832	52	2297	36	1608	61	2717
	50	29	1370	41	1897	50	2358	36	1665	60	2789

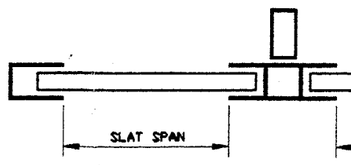

PRODECH RENEWED
ACCEPTANCE No. 01-0404.12
EXPIRATION DATE 09/16/2006
By Manuel Perez
PRODUCT CONTROL DIVISION
BUILDING CODE COMPLIANCE OFFICE

APPROVED AS COMPLYING WITH THE SOUTH FLORIDA BUILDING CODE
DATE APRIL 16, 1998
BY Manuel Perez
PRODUCT CONTROL DIVIS.ON
BUILDING CODE COMPLIANCE OFFICE
ACCEPTANCE NO. 98-0316.01

KNEZEVICH & ASSOCIATES, INC.
CONSULTING ENGINEERS • PRODUCT TESTING
6411 MOKENA DRIVE-MIAMI SPRINGS, FLORIDA 33166
MIAMI (305) 883-9571 FT. LAUDERDALE (954) 677-9500
FAX: (305) 883-9572
COPYRIGHT 1998 KNEZEVICH & ASSOCIATES, INC.

ROLL-UP SHUTTER

ROL-SPEC. INC.
7246 S.W. 42nd STREET
MIAMI, FL 33155
(305) 267-8197

revisions

no	date	by	description
1	02-03-95		COUNTY COMMENTS
2	03-13-95		SPAN SCHEDULES ADD.
3	03-04-98	ZS	ANCHOR DESIGN

V.J. KNEZEVICH
PROFESSIONAL ENGINEER
FL License No: PE 0010983

MAR 04 1998

date 9-14-95
scale AS NOTED
drawn by MC
design by VJK
checked by VJK
drawing no. 94-162
sheet 5 of 6

03/04/98 16:21

SLAT SPAN SCHEDULE D

*** FOR ELEVATIONS ≤ 30'-0":**

FOR SLAT SPANS ≤ 78" SEPARATION FROM GLASS SHALL BE 3" MIN.

FOR ELEVATIONS > 30'-0":

USE SEPARATION FROM GLASS SCHEDULE BELOW.

DESIGN LOAD (P.S.F.)	SINGLE SPAN TOTAL SLAT SPAN (FT-IN)	MIN. SEPERATION FROM GLASS (INCHES)
10.0	6 - 6	3
20.0	6 - 6	3
30.0	6 - 6	3
40.0	6 - 6	3
50.0	6 - 4	3
60.0	6 - 1	3
70.0	5 - 10	3
80.0	5 - 8	3
90.0	5 - 6	3
100.0	5 - 4	3
110.0	5 - 2	3
120.0	5 - 1	3
130.0	5 - 0	3
140.0	4 - 10	2.96
150.0	4 - 9	2.92
160.0	4 - 8	2.88
170.0	4 - 7	2.84
180.0	4 - 6	2.81
190.0	4 - 5	2.77
200.0	4 - 4	2.74
210.0	4 - 3	2.72
220.0	4 - 2	2.69
230.0	4 - 1	2.66

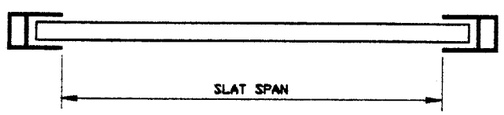

SINGLE SPAN

ANCHOR AND FASTENER - SCHEDULE E

Block B
Concrete C

RAWL LOK/BOLT - **TENSION** IN CONCRETE OR BLOCK
RAWL CALK-IN - **TENSION** IN CONCRETE OR BLOCK

ANCHOR TYPE	MATERIAL TYPE	MULLION REACTION (POUNDS)	DIAMETER (INCHES)	EMBEDMENT DISTANCE (INCHES)	QUANTITY OF FASTENERS PER ANGLE	THICKNESS OF TWO (2) ANGLES (INCHES)	(L) LENGTH OF EACH ANGLE (INCHES)	CONCRETE OR BLOCK EDGE DISTANCE (INCHES)	NUMBER OF TEK SCREWS	SIZE OF TEK SCREWS
LOK/BOLT	B	600	0.250	1.125	1	0.125	3.00	3.0	2	#12
CALK-IN	B	850	0.375	1.250	1	0.125	4.08	4.5	3	#12
LOK/BOLT	B	1200	0.250	1.125	2	0.125	5.76	3.0	3	#12
LOK/BOLT	B	1200	0.250	1.125	2	0.250	4.00	3.0	3	#12
CALK-IN	B	1700	0.375	1.250	2	0.250	5.25	4.5	3	#12
CALK-LOK	C	2508	0.500	1.5 - 2.25	1	0.250	3.01	6.0	4	#14
LOK/BOLT	C	2700	0.375	1.625	2	0.250	5.25	4.5	4	#14
CALK-IN	C	4810	0.375	1.250	2	0.250	11.50	4.5	5	#14
LOK/BOLT	C	5015	0.500	2.250	2	0.250	11.50	6.0	5	#14

ANCHOR AND FASTENER - SCHEDULE F

Block B
Concrete C

RAWL LOK/BOLT - **SHEAR** IN CONCRETE OR BLOCK
RAWL CALK-IN - **SHEAR** IN CONCRETE OR BLOCK

ANCHOR TYPE	MATERIAL TYPE	MULLION REACTION (POUNDS)	DIAMETER (INCHES)	EMBEDMENT DISTANCE (INCHES)	QUANTITY OF FASTENERS PER ANGLE	THICKNESS OF TWO (2) ANGLES (INCHES)	(L') LENGTH OF EACH ANGLE (INCHES)	CONCRETE OR BLOCK EDGE DISTANCE (INCHES)	NUMBER OF TEK SCREWS	SIZE OF TEK SCREWS
LOK/BOLT	B	318	0.250	1.125	2	0.125	4.00	1.25	2	#12
CALK-LOK	B	635	0.250	.875 - 1.125	1	0.125	2.00	3.00	2	#12
LOK/BOLT	B	635	0.250	1.125	4	0.125	11.50	1.25	3	#12
LOK/BOLT	B	1270	0.250	1.125	2	0.125	6.00	3.00	3	#12
LOK/BOLT	C	1625	0.375	1.625	1	0.125	2.00	4.50	3	#12
CALK-IN	C	1800	0.375	.875	2	0.125	4.00	3.00	3	#12
LOK/BOLT	C	3250	0.375	1.625	2	0.125	5.25	4.50	5	#14
CALK-IN	C	4220	0.375	1.250	2	0.125	5.25	4.50	6	#14
CALK-LOK	C	5800	0.500	1.5 - 2.25	2	0.125	6.50	6.00	9	#14
LOK/BOLT	C	6500	0.375	1.625	4	0.125	12.75	4.50	9	#14

WOOD FASTENING NOTES:

GALVANIZED STEEL OR 410 STAINLESS STEEL LAG SCREW ANCHORS MAY BE USED IN IN WOOD AT LOADS INDICATED FOR BLOCK OR CONCRETE. EMBEDMENT SHALL BE 1-1/2" MIN. INTO THE CENTER OF A PRIMARY FRAMING MATERIAL SUCH AS 2 X WOOD STUD OR A 2 X WOOD HEADER OR SILL PLATE.

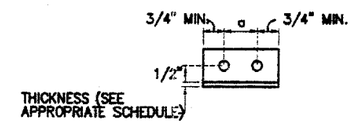

FASTENER SPACING SCHEDULE			
MARK	FASTENER DIAMETER		
	1/4"	3/8"	1/2"
a	2-1/2"	3-3/4"	5"

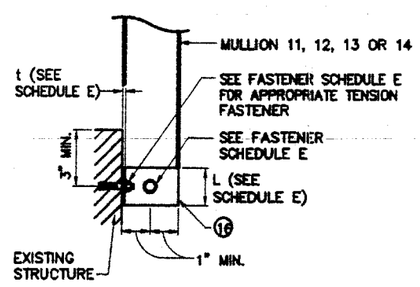

(WALL MOUNT)

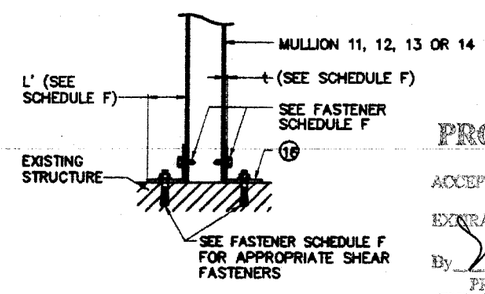

INSIDE MOUNT

NOTE:
MULLION CONNECTIONS ARE SIMILAR AT TOP MOUNTS.

MULLION CONNECTION DETAILS

SCALE : 1-1/2" = 1'-0"

PRODUCT RENEWED
ACCEPTANCE No. 01-0404.12
EXPIRATION DATE 04/16/2006
By Manuel Perez
PRODUCT CONTROL DIVISION
BUILDING CODE COMPLIANCE OFFICE

APPROVED AS COMPLYING WITH THE SOUTH FLORIDA BUILDING CODE
DATE APRIL 16 1998
BY Manuel Perez
PRODUCT CONTROL DIVISION
BUILDING CODE COMPLIANCE OFFICE
ACCEPTANCE NO. 98-0310.01

KNEZEVICH & ASSOCIATES, INC.
CONSULTING ENGINEERS • PRODUCT TESTING
641 MOKENA DRIVE-MIAMI SPRINGS, FLORIDA 33166
MIAMI (305) 883-9571 FT. LAUDERDALE (954) 677-9500
FAX: (305) 883-9572

COPYRIGHT 1998 KNEZEVICH & ASSOCIATES, INC.

ROLL-UP SHUTTER

ROL-SPEC. INC.
7246 S.W. 42nd STREET
MIAMI, FL 33155
(305) 267-8197

revisions

no	date	by	description
1	02-09-95		COUNTY COMMENTS
2	03-13-95		SPAN SCHEDULES ADD.
3	03-04-98	ZS	ANCHOR DESIGN

V.J. KNEZEVICH
PROFESSIONAL ENGINEER
FL License No: PE 0010983

MAR 04 1998

date 9-14-95
scale AS NOTED
drawn by MC
design by VJK
checked by VJK
drawing no. 94-162
sheet 6 of 6

03/04/98 16:21