MIAMI-DADE

MIAMI-DADE COUNTY, FLORIDA
METRO-DADE FLAGLER BUILDING

BUILDING CODE COMPLIANCE OFFICE
METRO-DADE FLAGLER BUILDING
140 WEST FLAGLER STREET, SUITE 1603
MIAMI, FLORIDA 33130-1563
(305) 375-2901 FAX (305) 375-2908

CONTRACTOR LICENSING SECTION
(305) 375-2527 FAX (305) 375-2558

CONTRACTOR ENFORCEMENT DIVISION
(305) 375-2966 FAX (305) 375-2908

PRODUCT CONTROL DIVISION
(305) 375-2902 FAX (305) 372-6339

PRODUCT CONTROL NOTICE OF ACCEPTANCE

PGT Industries
1070 Technology Drive
Nokomis ,FL 34275

Your application for Notice of Acceptance (NOA) of:
Series FD-101 Outswing Aluminum French Door
under Chapter 8 of the Code of Miami-Dade County governing the use of Alternate Materials and Types of Construction, and completely described herein, has been recommended for acceptance by the Miami-Dade County Building Code Compliance Office (BCCO) under the conditions specified herein.

This NOA shall not be valid after the expiration date stated below. BCCO reserves the right to secure this product or material at any time from a jobsite or manufacturer's plant for quality control testing. If this product or material fails to perform in the approved manner, BCCO may revoke, modify, or suspend the use of such product or material immediately. BCCO reserves the right to revoke this approval, if it is determined by BCCO that this product or material fails to meet the requirements of the South Florida Building Code.

The expense of such testing will be incurred by the manufacturer.

ACCEPTANCE NO.: 01-0417.05
EXPIRES: 07/22/2002

Raul Rodriguez
Chief Product Control Division

THIS IS THE COVERSHEET, SEE ADDITIONAL PAGES FOR SPECIFIC AND GENERAL CONDITIONS
BUILDING CODE & PRODUCT REVIEW COMMITTEE

This application for Product Approval has been reviewed by the BCCO and approved by the Building Code and Product Review Committee to be used in Miami-Dade County, Florida under the conditions set forth above.

Francisco J. Quintana, R.A.
Director
Miami-Dade County
Building Code Compliance Office

APPROVED: 09/13/2001

Vinyl Tech/Progressive Glass Technology.

ACCEPTANCE No.: 01-0417.05

APPROVED : September 13, 2001

EXPIRES : July 22, 2002

NOTICE OF ACCEPTANCE: SPECIFIC CONDITIONS

1. SCOPE

1.1 This **revises** and **replaces** the Notice of Acceptance No. **99-0615.01**, which was issued on July 22, 1999. It approves an outswing aluminum French door, as described in Section 2 of this Notice of Acceptance, designed to comply with the South Florida Building Code (SFBC), 1994 Edition for Miami-Dade County, for the locations where the pressure requirements, as determined by SFBC Chapter 23, do not exceed the Design Pressure Rating values indicated in the approved drawings.

2. PRODUCT DESCRIPTION

2.1 The **Series FD-101 Outswing Aluminum French Doors-** and its components shall be constructed in strict compliance with the following documents: Drawing No **944**, titled "French Door" Sheets 1 through 4 of 4, prepared by manufacturer, dated 09/05/97 and last revised on 04-13-01, signed and sealed by Robert L. Clark, P.E., bearing the Miami-Dade County Product Control approval stamp with the Notice of Acceptance number and approval date by the Miami-Dade County Product Control Division. These documents shall hereinafter be referred to as the approved drawings.

3. LIMITATIONS

3.1 This approval applies to single unit application of pair of doors and single door only, as shown in approved drawings. Single door unit shall include described in the active leaf of this approval.

4. INSTALLATION

4.1 The outswing aluminum French doors and its components shall be installed in strict compliance with the approved drawings.

4.2 Hurricane protection system (shutters): the installation of this unit **will require** a hurricane protection system.

5. LABELING

5.1 Each unit shall bear a permanent label with the manufacturer's name or logo, city, state and following statement: "Miami-Dade County Product Control Approved".

6. BUILDING PERMIT REQUIREMENTS

6.1 Application for building permit shall be accompanied by copies of the following:

6.1.1 This Notice of Acceptance

6.1.2 Duplicate copies of the approved drawings, as identified in Section 2 of this Notice of Acceptance, clearly marked to show the components selected for the proposed installation.

6.1.3 Any other documents required by the Building Official or the South Florida Building Code (SFBC) in order to properly evaluate the installation of this system.

Ishaq I. Chanda

Ishaq I. Chanda, P.E. Product Control Examiner
Product Control Division

Vinyl Tech/Progressive Glass Technology.

ACCEPTANCE No.: 01-0417.05

APPROVED : September 13, 2001

EXPIRES : July 22, 2002

NOTICE OF ACCEPTANCE: STANDARD CONDITIONS

1. Renewal of this Acceptance (approval) shall be considered after a renewal application has been filed and the original submitted documentation, including test supporting data, engineering documents, are no older than eight (8) years.

2. Any and all approved products shall be permanently labeled with the manufacturer's name, city, state, and the following statement: "Miami-Dade County Product Control Approved", or as specifically stated in the specific conditions of this Acceptance.

3. Renewals of Acceptance will not be considered if:
   a) There has been a change in the South Florida Building Code affecting the evaluation of this product and the product is not in compliance with the code changes;
   b) The product is no longer the same product (identical) as the one originally approved;
   c) If the Acceptance holder has not complied with all the requirements of this acceptance, including the correct installation of the product;
   d) The engineer who originally prepared, signed and sealed the required documentation initially submitted is no longer practicing the engineering profession.

4. Any revision or change in the materials, use, and/or manufacture of the product or process shall automatically be cause for termination of this Acceptance, unless prior written approval has been requested (through the filing of a revision application with appropriate fee) and granted by this office.

5. Any of the following shall also be grounds for removal of this Acceptance:
   a) Unsatisfactory performance of this product or process.
   b) Misuse of this Acceptance as an endorsement of any product, for sales, advertising or any other purpose.

6. The Notice of Acceptance number preceded by the words Miami-Dade County, Florida, and followed by the expiration date may be displayed in advertising literature. If any portion of the Notice of Acceptance is displayed, then it shall be done in its entirety.

7. A copy of this Acceptance as well as approved drawings and other documents, where it applies, shall be provided to the user by the manufacturer or its distributors and shall be available for inspection at the job site at all time. The engineer need not reseal the copies.

8. Failure to comply with any section of this Acceptance shall be cause for termination and removal of Acceptance.

9. This Notice of Acceptance consists of pages 1, 2 and this last page 3.

Ishaq I. Chanda

Ishaq I. Chanda, P.E. Product Control Examiner
Product Control Division

END OF THIS ACCEPTANCE

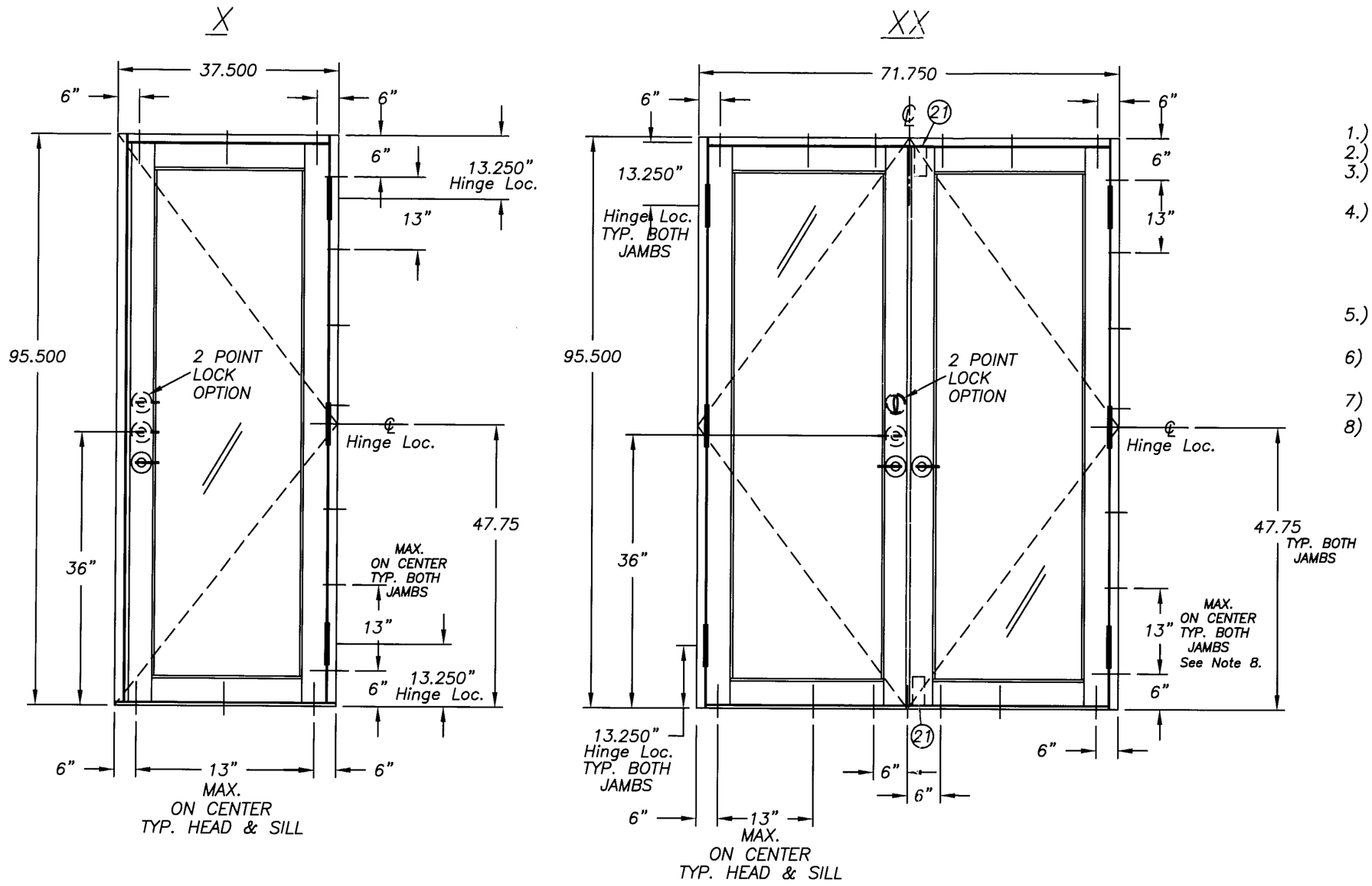

NON–IMPACT DOORS

1.) GLAZING: 3/16" TEMPERED
2.) CONFIGURATIONS: X, XX
3.) DESIGN PRESSURE RATING:
+60 P.S.F. −60 P.S.F.
4.) ANCHORS:
MAX. 6" FROM CORNERS (HEAD & SILL)
MAX. SPACING AT HEAD & SILL: 13.000
MAX. 6" FROM CORNERS (JAMB)
MAX. SPACING AT JAMBS: 13.000
5.) INSTALLATION OF THIS UNIT WILL REQUIRE A HURRICANE PROTECTIVE UNIT.
6) SEALANT TO BE APPLIED AROUND FRAME CORNER, PANEL CORNER, DEAD BOLT & LEVER HANDLE.
7) REF. NOA: 99–0615.01
8) SCREWS ARE STAGGERED AT 13" CENTERS. SEE SHEET 4 FOR ANCHORAGE DETAIL.

APPROVED AS COMPLYING WITH THE SOUTH FLORIDA BUILDING CODE
DATE SEPTEMBER 13, 2001
BY Ishaq I. Chanda
PRODUCT CONTROL DIVISION
BUILDING CODE COMPLIANCE OFFICE
ACCEPTANCE NO. 01-0417.05

01-0417.05

EXTERIOR ELEVATION

Robert L. Clark
4/13/01

Robert L. Clark, P.E.
P.E. #39712
Structural

Revisions: C) added 2 point lock option	Tolerances Unless Noted: Fractions: ± 1/64, Decimal .00: ±, Decimal .000 ±, Angular: ± 1°	1070 Technology Dr. Nokomis, Fl. 34275	PGT INDUSTRIES
	Series/Model: FD–101		
Material:	Description: French Door – Elevations		
Revsd By: D.B. / Date: 11/17/00 / Chkd By: / Date:	PGT NO: / VENDOR NO: / Scale: / Sheet: 1 of 4	Drawing No. 944	Rev: C
Drawn By: D.B. / Date: 9/5/97			

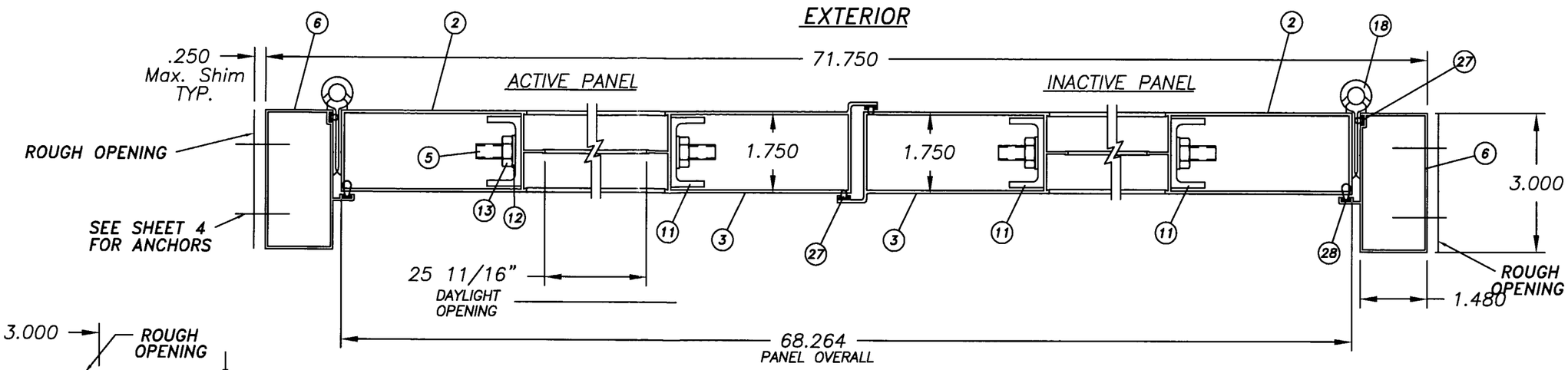

HORIZONTAL SECTION

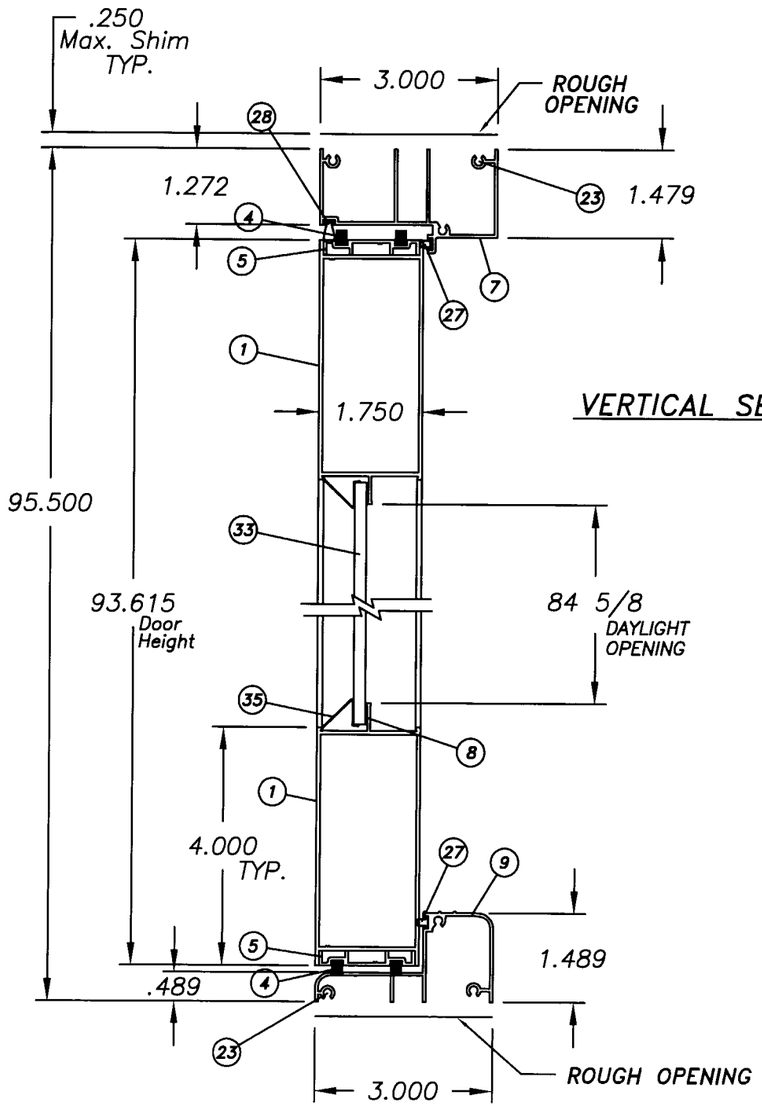

VERTICAL SECTION

APPROVED AS COMPLYING WITH THE
SOUTH FLORIDA BUILDING CODE
DATE SEPTEMBER 13, 2001
BY Shaq I. Chanda
PRODUCT CONTROL DIVISION
BUILDING CODE COMPLIANCE OFFICE
ACCEPTANCE NO. 01-0417.05

Robert L. Clark
4/13/01

Robert L. Clark, P.E.
P.E. #39712
Structural

Revisions: C) added 2 point lock option	Tolerances Unless Noted: Fractions: ± 1/64, Decimal .00: ±, Decimal .000 ±, Angular: ± 1°	1070 Technology Dr. Nokomis, Fl. 34275	PGT INDUSTRIES
	Series/Model: FD-101		
Material:	Description: French Door – Section Views		
Revsd By: D.B. / Date: 11/17/00 / Chkd By: / Date:	PGT NO: / VENDOR NO: / Scale: / Sheet: 2 of 4	Drawing No. 944	Rev: C
Drawn By: D.B. / Date: 9/5/97			

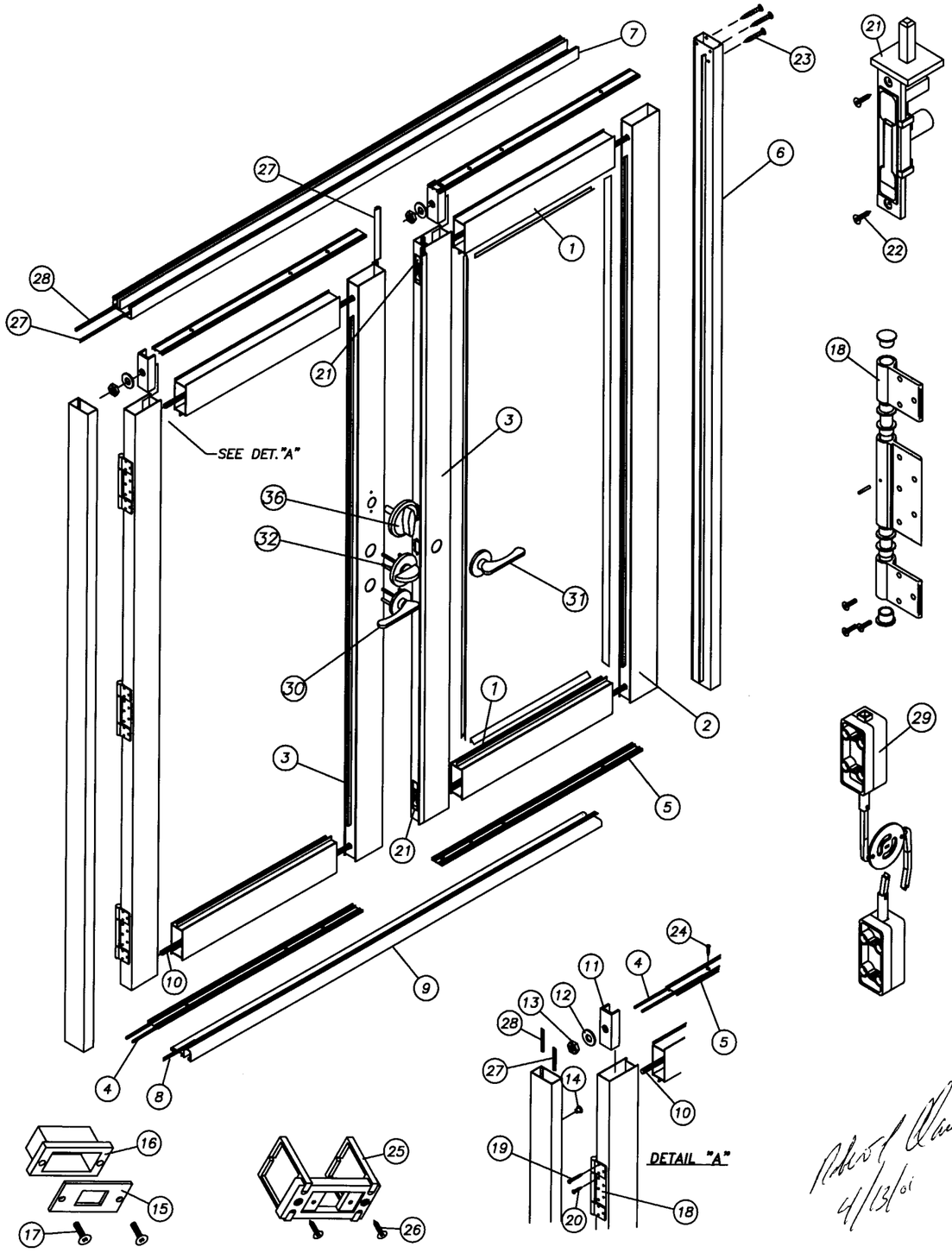

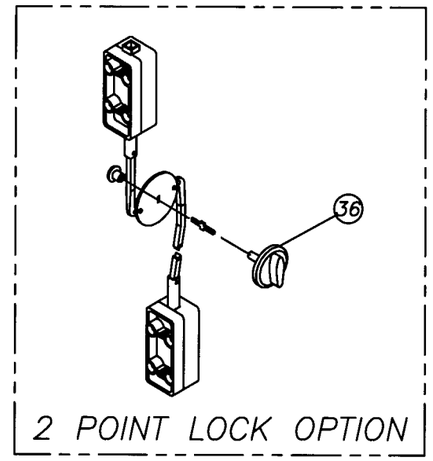

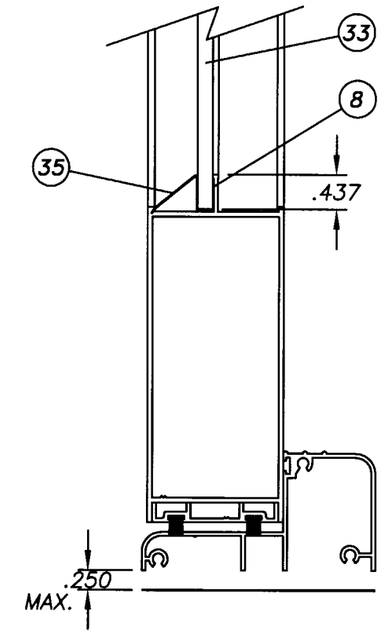

3/16" TEMPERED
NON-IMPACT

GLAZING OPTION

APPROVED AS COMPLYING WITH THE
SOUTH FLORIDA BUILDING CODE
DATE SEPTEMBER 13, 2001
BY Ishaq I. Chanda
PRODUCT CONTROL DIVISION
BUILDING CODE COMPLIANCE OFFICE
ACCEPTANCE NO. 01-0417.05

Robert L. Clark, P.E.
P.E. #39712
Structural

Revisions: C) added 2 point lock assy	Tolerances Unless Noted: Fractions: ± 1/64, Decimal .00: ±, Decimal .000 ±, Angular: ± 1°	1070 Technology Dr. Nokomis, Fl. 34275	PGT INDUSTRIES
	Series/Model: FD-101		
Material:	Description: French Door – Glazing & Exploded Views		
Revsd By: D.B. / Date: 11/17/00 / Chkd By: / Date:	PGT NO: / VENDOR NO: / Scale: / Sheet: 3 of 4	Drawing No. 944	Rev: C
Drawn By: D.B. / Date: 9/5/97			

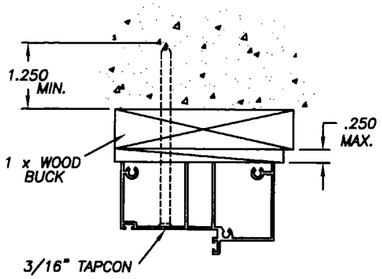

TYP. HEAD

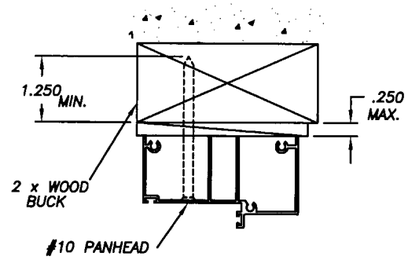

TYP. HEAD

SCREWS ARE STAGGERED IN JAMBS.
SEE NOTE 8 ON SHEET 1

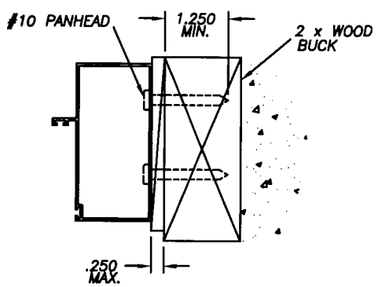

TYP. JAMB

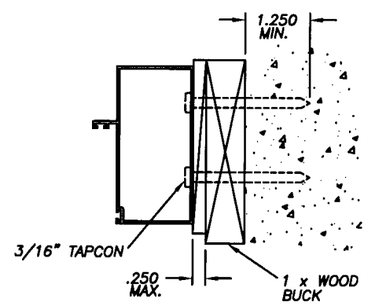

TYP. JAMB

ITEM	DESCRIPTION	V.T. #	QTY.	LOCATION	VENDOR	VENDOR #
1	DOOR HEAD/SILL (AL. 6063-T5/.062 WALL)	60375	2 (1)		ALUMAX	AF-10375
2	DOOR JAMB (AL. 6063-T5/.062 WALL)	60376	2 (1)		ALUMAX	AF-10376
3	DOOR ASTRAGAL (AL. 6063-T5/.062 WALL)	60377	2 (1)		ALUMAX	AF-10377
4	.250 x .187 FINSEAL STRIP	67924G	8 (4)	(2/each door top & bot. rail)	SCHLEGEL CORP.	FS7924-187
5	WSTP CHANNEL (AL. 6063-T5/.050 WALL)	60379	4 (2)		ALUMAX	AF-10379
6	FRAME JAMB (AL. 6063-T5/.050 WALL)	60380	2 (2)		ALUMAX	AF-10380
7	FRAME HEAD (AL. 6063-T5/.062 WALL)	60411	1 (1)		ALUMAX	AF-12376
8	SILICONE	62899C			DOW CORNING	899
9	OUTSW. THRESHOLD (AL. 6063-T5/.050 WALL)	61069	1 (1)		ALUMAX	AF-12375
10	5/16x18 THREADED ROD	6TRODA	4 (2)	(1/door top & bot. rail)	FASTEC INDUSTRIAL	
11	TRUSS CLAMP (AL. 6063-T5/.062 WALL)	60378M	8 (4)	(2/ea. door top & bot. rail)	ALUMAX	AF-10378
12	5/16x1/16 TRUSS WASHER	7WASHA	8 (4)	(2/ea. door top & bot. rail)	FASTEC INDUSTRIAL	
13	5/16x18 TRUSS NUT	7JNUTA	8 (4)	(2/ea. door top & bot. rail)	FASTEC INDUSTRIAL	
14	FRAME SCR. COVER CAP	41722W	10 (5)		VINYL TECH.	41722W
15	STRIKE PLATE	7FRSPX	1 (1)		CAMCORP	
16	STRIKE PLATE INSERT	41721	1 (1)		VINYL TECH.	41721
17	10x3/4 SCR. FLT. HD. PHIL	71034A	2 (2)		MERCHANTS FASTENER	
18	HINGE ASS'Y.	7FRMOW	6 (3)	(3/frame jambs)	NATIONWIDE IND.	
19	10x1 FLT. HD. PHIL	710X1W	26 (13)	(6/hinge - hinge-door jamb)	MERCHANTS FASTENER	
20	10x1/2 FLT. HD. PHIL.	710X12PPW	30 (15)	(5/hinge &hinge-frame jamb)	MERCHANTS FASTENER	
21	TOP/BOTT. SLIDE BOLT LOCK	41720	2 (0)	(1 @ top/bot. of l.h. astragal)	VINYL TECH.	41720
22	6x1/2 FLT. HD. PHIL.	7612FW	4 (4)	(2/slide bolt locks)	FASTEC INDUSTRIAL	
23	8x1 1/2 SCR. PN HD. QUAD.	78112A	12 (12)	(6/head & sill)	FASTEC INDUSTRIAL	
24	#6 x 5/8 Ph. Fl. SMS	7658PFA	28 (14)	(2/hor. bead, 5/ver. bead)	AQUA FASTENERS	
25	LOCK SUPPORT ASS'Y.	4UBLOK	3 (2)	(1/lock)	VINYL TECH.	4UBLOK
26	6x3/4 FLT. HD. PHIL.	7634F	6 (4)	(2/lock support assy.)	FASTEC INDUSTRIAL	
27	.200 x .190 QLON	6Q200K	5 (4)	(1/astragals,fr. jambs & head)	SCHLEGEL CORP.	Q200X190
28	.375 x .190 QLON	6Q300W	4 (3)	(1/astragals & frame jambs)	SCHLEGEL CORP.	Q375x190
29	3 POINT LOCK ASS'Y.	FD3PTAY	1 (1)	(@ r.h. astragal)	VINYL TECH.	FD3PTAY
30	LOCK (ACTIVE)	7LOKAP	1 (1)	(@ r.h. astragal)	HARLOC	100
31	LOCK (DUMMY)	7LOKIP	1 (0)	(@ l.h. astragal)	HARLOC	880
32	DEAD-BOLT LOCK	7BLTIP	1 (1)	(@ r.h. astragal)	HARLOC	820
33	3/16" TEMPERED		2 (1)		PPG. LOF	
34	SEAM SEALER	6SM55W			SCHNEE MOREHEAD	SM5504
35	3/16" GLAZING BEAD	65170	8 (4)	(used w/3/16" glass)	FLORIDA SCREEN	05-005
36	2 POINT LOCK OPTION	7978LAB	1 (1)		SULLIVAN & ASSOC.	

NOTE: QTY'S IN BRACKETS ARE FOR X CONFIGURATION

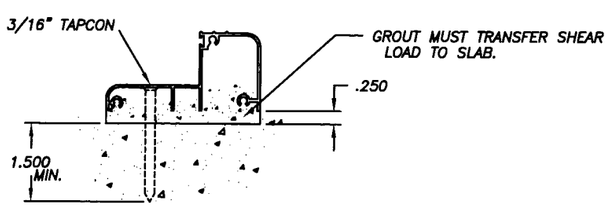

TYP. SILL

APPROVED AS COMPLYING WITH THE SOUTH FLORIDA BUILDING CODE
DATE SEPTEMBER 13, 2001
BY Ishan I. Chanda
PRODUCT CONTROL DIVISION
BUILDING CODE COMPLIANCE OFFICE
ACCEPTANCE NO 01-0417.05

Robert L. Clark
4/13/01

Robert L. Clark, P.E.
P.E. #39712
Structural

Revisions: C) added 2 point lock option	Tolerances Unless Noted: Fractions: ± 1/64, Decimal .00: ±, Decimal .000 ±, Angular: ± 1°	1070 Technology Dr. Nokomis, Fl. 34275	PGT INDUSTRIES
	Series/Model: FD-101		
Material: 6063-T5	Description: French Door - Anchorage & Bill of Materials		
Revsd By: D.B. / Date: 11/17/00 / Chkd By: / Date:	PGT NO: / VENDOR NO: / Scale: / Sheet: 4 of 4	Drawing No. 944	Rev: C
Drawn By: D.B. / Date: 9/5/97			