MIAMI-DADE COUNTY, FLORIDA
METRO-DADE FLAGLER BUILDING

BUILDING CODE COMPLIANCE OFFICE
METRO-DADE FLAGLER BUILDING
140 WEST FLAGLER STREET, SUITE 1603
MIAMI, FLORIDA 33130-1563
(305) 375-2901 FAX (305) 375-2908

CONTRACTOR LICENSING SECTION
(305) 375-2527 FAX (305) 375-2558

CONTRACTOR ENFORCEMENT DIVISION
(305) 375-2966 FAX (305) 375-2908

PRODUCT CONTROL DIVISION
(305) 375-2902 FAX (305) 372-6339

PRODUCT CONTROL NOTICE OF ACCEPTANCE

Atlantic Shutter Systems,Inc.
P.O. Box 1915
Little River ,SC 29566

Your application for Notice of Acceptance (NOA) of:
RE-1000
under Chapter 8 of the Code of Miami-Dade County governing the use of Alternate Materials and Types of Construction, and completely described herein, has been recommended for acceptance by the Miami-Dade County Building Code Compliance Office (BCCO) under the conditions specified herein.

This NOA shall not be valid after the expiration date stated below. BCCO reserves the right to secure this product or material at any time from a jobsite or manufacturer's plant for quality control testing. If this product or material fails to perform in the approved manner, BCCO may revoke, modify, or suspend the use of such product or material immediately. BCCO reserves the right to revoke this approval, if it is determined by BCCO that this product or material fails to meet the requirements of the South Florida Building Code.

The expense of such testing will be incurred by the manufacturer.

ACCEPTANCE NO.: 01-0424.05
EXPIRES: 10/18/2006

Raul Rodriguez
Chief Product Control Division

THIS IS THE COVERSHEET, SEE ADDITIONAL PAGES FOR SPECIFIC AND GENERAL CONDITIONS
BUILDING CODE & PRODUCT REVIEW COMMITTEE

This application for Product Approval has been reviewed by the BCCO and approved by the Building Code and Product Review Committee to be used in Miami-Dade County, Florida under the conditions set forth above.

Francisco J. Quintana, R.A.
Director
Miami-Dade County
Building Code Compliance Office

APPROVED: 10/18/2001

Atlantic Shutter Systems, Inc.

ACCEPTANCE NO: 01-0424.05

APPROVED: OCT 1 8 2001

EXPIRES: OCT 1 8 2006

NOTICE OF ACCEPTANCE: SPECIFIC CONDITIONS

1 SCOPE:

1.1 This approves an extruded aluminum roll-up type shutter, as described in Section 2 of this Notice of Acceptance, designed to comply with the South Florida Building Code, (S.F.B.C.) 1994 Edition for Miami-Dade County. For the locations where the pressure requirements, as determined by S.F.B.C. Chapter 23, do not exceed the design pressure-rating values indicated in the approved drawings.

2 PRODUCT DESCRIPTION:

2.1 The **RE 1000 Roll-Up Shutter** and its components shall be constructed in strict compliance with the following documents: Drawing No. **01-061R**, Sheets 1 through 14 of 14, titled "RE 1000 Extruded Aluminum Roll Shutters", prepared by EngCo, Inc., dated 08/05/01, with no revisions. It is signed and sealed by Pedro De Figueiredo PE. bearing the Miami-Dade County Product Control approval stamp with the Notice of Acceptance number and approval date. These documents shall herein after be referred to as the approved drawings.

3 LIMITATIONS:

3.1 All permanent set components, included but not limited to embedded anchor bolts, metal shields, headers and sills, must be protected against corrosion, damage and contamination at all times.

3.2 Minimum separation from interior storm bar to existing glass shall be as shown on sheet 3 of 14".

3.3 Minimum slat engagement inside of sidetrack shall be 1-1/4".

3.4 Slat orientation shall be concave side to the exterior.

4 INSTALLATION:

4.1 The extruded aluminum roll-up shutter and its component shall be installed in strict compliance with the approved drawing

5 LABELING:

5.1 Each unit shall bear a permanent label with the manufacturer's name or logo, city, state and the following statement: "Miami-Dade County Product Control Approved"

6 BUILDING PERMIT REQUIREMENTS:

6.1 Application for Building Permit shall be accompanied by copies of the following:

- **6.1.1** This Notice of Acceptance
- **6.1.2** Duplicate copies of the approved drawings, as identified in Section 2 of this Notice of Acceptance, clearly marked to show the components selected for the proposed installation.
- **6.1.3** Any other document required by the Building Official or the South Florida Building Code in order to evaluate the installation of this system.

Candido Font, PE. Sr. Product Control Examiner
Product Control Division

Atlantic Shutter Systems, Inc.

ACCEPTANCE NO: 01-0424.05

APPROVED: OCT 1 8 2001

EXPIRES: OCT 1 8 2006

NOTICE OF ACCEPTANCE: STANDARD CONDITIONS

1 Renewal of this Acceptance (approval) shall be considered after a renewal application has been filed and the original submitted documents, including test-supporting data, engineering documents, are no older than eight (8) years.

2. Any and all approved products shall be permanently labeled with the manufacturer's name, city, state, and the following statement: "Miami-Dade County Product Control Approval", or as specifically stated in the specific conditions of this Acceptance.

3. Renewals of Acceptance will not be considered if:
   a. There has been a change in the South Florida Building Code affecting the evaluation of this product and the product is not in compliance with the code changes.
   b. The product is no longer the same product (identical) as the one originally approved.
   c. If the Acceptance holder has not complied with all the requirements of this acceptance, including the correct installation of the product.
   d. The engineer who originally prepared, signed and sealed the required documentation initially submitted, is no longer practicing the engineering profession.

4. Any revision or change in the materials, use, and/or manufacture of the product or process shall automatically be cause for termination of this Acceptance, unless prior written approval has been requested (through the filing of a revision application with appropriate fee) and granted by this office.

5. Any of the following shall also be grounds for removal of this Acceptance:
   a. Unsatisfactory performance of this product or process.
   b. Misuse of this Acceptance as an endorsement of any product, for sales, advertising or any other purposes.

6. The Notice of Acceptance number preceded by the words Miami-Dade County, Florida, and followed by the expiration date may be displayed in advertising literature. If any portion of the Notice of Acceptance is displayed, then it shall be done in its entirety.

7. A copy of this Acceptance as well as approved drawings and other documents, where it applies, shall be provided to the user by the manufacturer or its distributors and shall be available for inspection at the job site at all time. The engineer need not reseal the copies.

8. Failure to comply with any section of this Acceptance shall be cause for termination and removal of Acceptance.

9. This Notice of Acceptance consists of pages 1, 2 and this last page 3.

Candido Font, PE. Sr. Product Control Examiner
Product Control Division

END OF THIS ACCEPTANCE

Atlantic Shutter Systems, Inc.

ACCEPTANCE NO: 01-0424.05

APPROVED OCT 1 8 2001

EXPIRES: OCT 1 8 2006

NOTICE OF ACCEPTANCE: EVIDENCE SUBMITTED:

A. DRAWING

1. Drawing No. **01-061R**, titled "RE 1000 Extruded Aluminum Roll Shutters", Sheets 1 through 14 of 14, prepared by EngCo, Inc., dated 08/05/01, with no revisions, signed and sealed by P. D. Figueiredo, PE.

B. TEST

1. Test report on Large Missile Impact Test per PA 201 and Cyclic Wind Pressure Test per PA 203, of "Roll shutter RE 1000 Series" prepared by Hurricane Engineering & Testing, Inc., Report No. **HETI 00-951**, dated 11/09/2000, signed and sealed by H. M. Medina, PE.
2. Test report on Uniform Static Air Pressure Test per PA 202 & Force Entry Resistance Test per SFBC Section 3603.2(b)3 of "Roll shutter RE 1000 Series" prepared by Hurricane Engineering & Testing, Inc., Report No. **HETI 00-950**, dated 11/09/00, signed and sealed by H. M. Medina PE.
3. Test report on Large Missile Impact Test per PA 201 of "Roll shutter RE 1000 Series", prepared by Hurricane Engineering & Testing, Inc., Report No. **HETI 00-954**, dated 11/21/00, signed and sealed by H. M. Medina, PE.
4. Test report on Large Missile Impact Test per PA 201 of "Roll shutter storm bars RE 1000 Series", prepared by Hurricane Engineering & Testing, Inc., Report No.**HETI 01-973**, dated 01/30/01, signed and sealed by H. M. Medina, PE.

C. CALCULATIONS

1. Comparative analysis for slats; storm bars, headers and anchors using rational analysis dated 02/17/01, Section B pages 1 through 11, Section C pages 1 through 11, Section D pages 1 & and Section E pages 1 through 4, prepared by Engco, Inc., signed and sealed by P. D. Figueiredo, PE.
2. Revised calculations prepared by Engco, Inc. on 07/25/01

D. MATERIAL CERTIFICATION

1. Tensile Test Report No. **HETI 01-T005**, per ASTM E8, Hurricane Engineering & Testing, Inc., dated 03/08/01, signed and sealed by H. M. Medina, PE.

E. STATEMENTS

1. Letter of Code Compliance issued by Engco, Inc., on 04/20/2001 and signed by P. D. Figueiredo, PE.
2. No-financial interest letter issued by Atlantic Shutter Systems. on 04/05/2001, and signed by D. Cottingham.

Candido Font, PE. Sr. Product Control Examiner
Product Control Division

ROLL SHUTTER RE 1000

GENERAL NOTES:

1- DEFINITION: This product is an aluminum rolling type shutter, designed, constructed and erected to easily enclose an area, providing protection from Hurricane force winds within the allowable designed pressures and limitation stated in this approval.

2- CODE: This product has been tested and designed in accordance with the South Florida Building Code, 1994 Dade County Edition, under Chapters 23 and 35.

3- POSTING: A permanent legible decal shall be placed at readily visible location reading the following:

"RE 1000 SERIES ROLL SHUTTER
ATLANTIC SHUTTER SYSTEMS, INC
LITTLE RIVER, SC
DADE COUNTY PRODUCT CONTROL APPROVED"

4- LOADS: Each installation must meet the design load calculated by a professional Engineer. The designed load MUST comply with chapter 23 (SFBC - Section 2309) and ASCE 7-88 (Section 6). Basic wind speed = 110 mph.

5- MATERIAL: All aluminum structure and components shall be designed as per section 30 of the SFBC. Shutter aluminum extruded shapes shall be 6063-T5 or as noted. Tubular shapes used as storm bars, headers and mullions shall be 6063-T6.

6- FASTENERS: Assembly screws and anchors shall be as specified at current set of drawings. Installation and loads as per this approval.

INDEX:

SHEET 1 of 14 - COVER SHEET, INDEX, GENERAL NOTES
SHEET 2 of 14 - SHUTTER COMPONENTS
SHEET 3 of 14 - SLATS WINDLOAD & DEFLECTIONS (TABLES 1.3, 2.3, 3.3)
SHEET 4 of 14 - GUIDE RAILS MOUNTING OPTIONS
SHEET 5 of 14 - STORM BARS SELECTION & DEFLECTION TABLE
SHEET 6 of 14 - STORM BARS SELECTION & DEFLECTION TABLE
SHEET 7 of 14 - STORM BARS ANCHORING TABLES
SHEET 8 of 14 - HEADER SELECTION & DEFLECTION TABLES
SHEET 9 of 14 - HEADER SELECTION & DEFLECTION TABLES
SHEET 10 of 14 - HEADER ANCHORING TABLES
SHEET 11 of 14 - MULLION SELECTION TABLE
SHEET 12 of 14 - MULLION ANCHORING TABLES
SHEET 13 of 14 - HOOD ASSEMBLY
SHEET 14 of 14 - COMBINED DEFLECTION ON MULTIPLE SPANS SHUTTERS

Manufacturer:
Atlantic Shutter Systems, Inc.
1513 ABSCO DRIVE
LITTLE RIVER, SC 29566
Tel.: (843) 399-6000

Product:
RE1000
EXTRUDED ALUMINUM ROLL SHUTTERS

Engineering:
EngCo Inc.
CA 8116
6971 W. Sunrise Blvd. 104
Plantation, Fl. 33313
Tel.: (954) 585-0304

SEP 2 0 2001

Engineer Seal
Pedro De Figueiredo
PE 52609

Date: 8/5/01
Scale: 1:1
Design by: PPMF

Dade County NOA:
APPROVED AS CONFORMING WITH THE SOUTH FLORIDA BUILDING CODE
DATE OCT 1 8 2001
BY
PRODUCT CONTROL DIVISION
BUILDING CODE COMPLIANCE OFFICE
ACCEPTANCE NO. 01-0424.05

Drawing Number
01-061R

Sheet
1 of 14

SLATS WINDLOAD DESIGN TABLES

TABLE 1.3
MAXIMUM INSIDE TRACK (TT)
RE 1000 SHUTTER SLAT

PD	1 SPAN	2 SPAN	3 SPAN
30	65	133	200
45	58	133	200
55	54	133	196
65	51	133	188
75	49	128	181
85	47	120	174
95	45	114	168
105	44	108	162
115	43	103	157
125	41	99	153
135	40	95	149
145	39	92	146
155	39	89	142
165	38	86	139
175	37	84	137
185	36	81	134
195	36	79	132
255	33	69	116

PD= Design load in Psf
Max. Deflection= min. of span/30 or 2"
Spans are indicated in inches

TABLE 2.3
SLAT DEFLECTION FOR 2 SPAN SHUTTERS

	SHUTTER SPAN							
Pd	66	60	54	48	42	36	30	24
30	0.89	0.61	0.40	0.25	0.15	0.08	0.04	0.02
45	1.33	0.91	0.60	0.37	0.22	0.12	0.06	0.02
55	1.63	1.11	0.73	0.46	0.27	0.14	0.07	0.03
65	1.92	1.31	0.86	0.54	0.32	0.17	0.08	0.03
75	-	1.52	0.99	0.62	0.36	0.20	0.09	0.04
85	-	1.72	1.13	0.70	0.41	0.22	0.11	0.04
95	-	1.92	1.26	0.79	0.46	0.25	0.12	0.05
105	-	-	1.39	0.87	0.51	0.27	0.13	0.05
115	-	-	1.52	0.95	0.56	0.30	0.15	0.06
125	-	-	1.66	1.03	0.61	0.33	0.16	0.06
135	-	-	1.79	1.12	0.65	0.35	0.17	0.07
145	-	-	-	1.20	0.70	0.38	0.18	0.07
155	-	-	-	1.28	0.75	0.41	0.20	0.08
165	-	-	-	1.37	0.80	0.43	0.21	0.09
175	-	-	-	1.45	0.85	0.46	0.22	0.09
185	-	-	-	1.53	0.90	0.48	0.23	0.10
195	-	-	-	-	0.95	0.51	0.25	0.10
255	-	-	-	-	1.24	0.67	0.32	0.13

Deflections are indicated in inches

TABLE 3.3
SLAT DEFLECTION FOR 3 SPAN SHUTTERS

	SHUTTER SPAN							
Pd	66	60	54	48	42	36	30	24
30	1.13	0.77	0.51	0.32	0.19	0.10	0.05	0.02
45	1.70	1.16	0.76	0.48	0.28	0.15	0.07	0.03
55	-	1.42	0.93	0.58	0.34	0.18	0.09	0.04
65	-	1.68	1.10	0.69	0.40	0.22	0.10	0.04
75	-	1.93	1.27	0.79	0.46	0.25	0.12	0.05
85	-	-	1.44	0.90	0.53	0.28	0.14	0.06
95	-	-	1.61	1.00	0.59	0.32	0.15	0.06
105	-	-	1.78	1.11	0.65	0.35	0.17	0.07
115	-	-	-	1.22	0.71	0.38	0.19	0.08
125	-	-	-	1.32	0.77	0.42	0.20	0.08
135	-	-	-	1.43	0.84	0.45	0.22	0.09
145	-	-	-	1.53	0.90	0.48	0.23	0.10
155	-	-	-	-	0.96	0.52	0.25	0.10
165	-	-	-	-	1.02	0.55	0.27	0.11
175	-	-	-	-	1.08	0.59	0.28	0.12
185	-	-	-	-	1.15	0.62	0.30	0.12
195	-	-	-	-	1.21	0.65	0.31	0.13
255	-	-	-	-	-	0.85	0.41	0.17

(GS) GLASS SEPARATION	
LARGE MISSILE IMPACT	WIND LOAD ONLY
4 7/8" -48"<=SPAN<=66 5/8" 4" -30"<SPAN<48" 3 1/2" -SPAN<=30"	3" ALL CONDITIONS

GLASS SEPARATION FOR LARGE MISSILE IMPACT IS APPLICABLE FOR INSTALLATION UP TO 30 FT. OF GRADE DUE TO LARGE MISSILE IMPACT. WIND LOAD GLASS SEPARATION APPLIES TO INSTALLATION ABOVE 30 FT. OF GRADE.

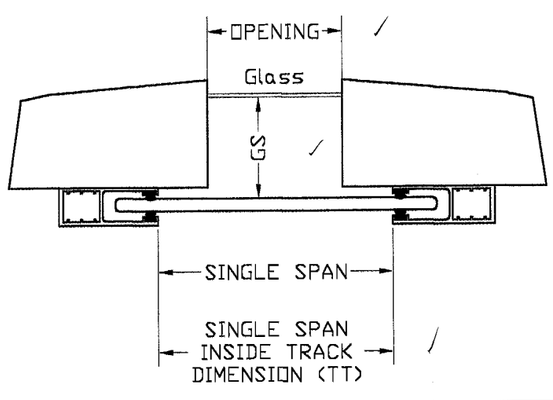

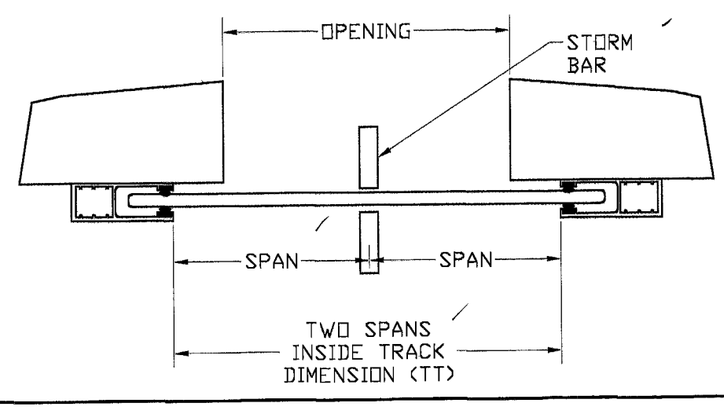

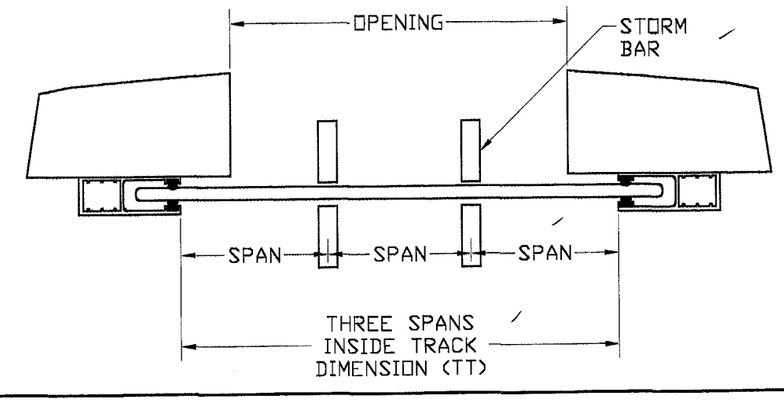

Manufacturer:
Atlantic Shutter Systems, Inc.
1513 ABSCO DRIVE
LITTLE RIVER, SC 29566
Tel.: (843) 399-6000

Product:
RE1000
EXTRUDED ALUMINUM ROLL SHUTTERS

Engineering:
EngCo Inc.
CA 8116
6971 W. Sunrise Blvd. 104
Plantation, Fl. 33313
Tel.: (954) 585-0304

SEP 2 0 2001

Engineer Seal
Pedro De Figueiredo
PE 52609

Date: 8/5/01
Scale: 1:1
Design by: PPMF

Dade County NOA:
APPROVED AS COMPLYING WITH THE SOUTH FLORIDA BUILDING CODE
DATE OCT 1 8 2001
BY
PRODUCT CONTROL DIVISION
BUILDING CODE COMPLIANCE OFFICE
ACCEPTANCE NO. 01-0924.05

Drawing Number
01-061R

GUIDE RAILS - MOUNTING OPTIONS

MOUNT: WALL

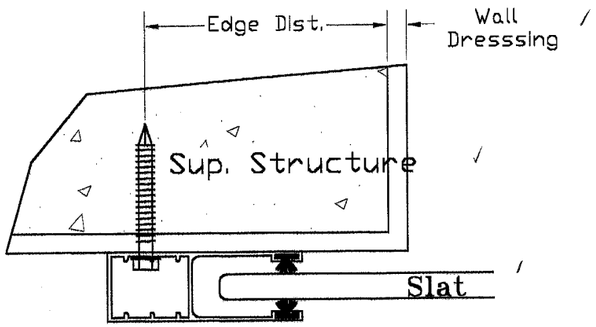

DESIGNED PRESSURES

	ANCHOR SPACING			
TRACK	12	9	6	3
ANCHOR A	75	125	215	<255
ANCHOR B	na	30	65	<195
ANCHOR C	85	135	195	<255

MOUNT: INSET

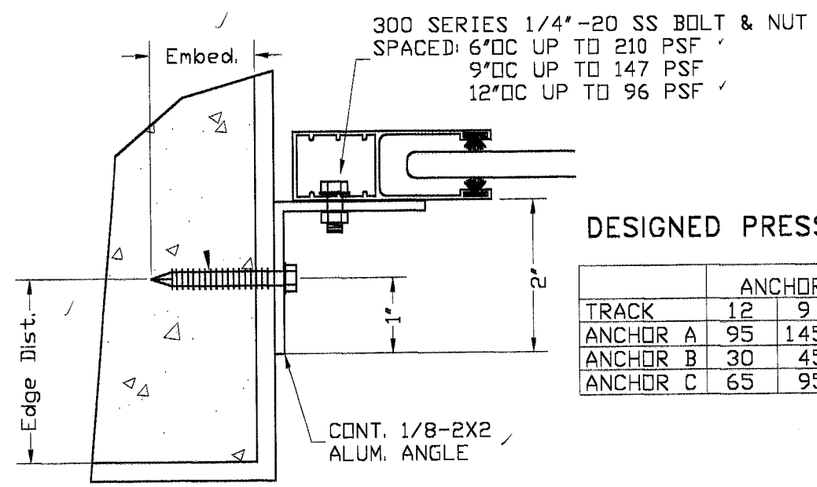

DESIGNED PRESSURES

	ANCHOR SPACING			
TRACK	12	9	6	3
ANCHOR A	95	145	<255	-
ANCHOR B	30	45	95	<255
ANCHOR C	65	95	185	<255

MOUNT: BUILT-OUT

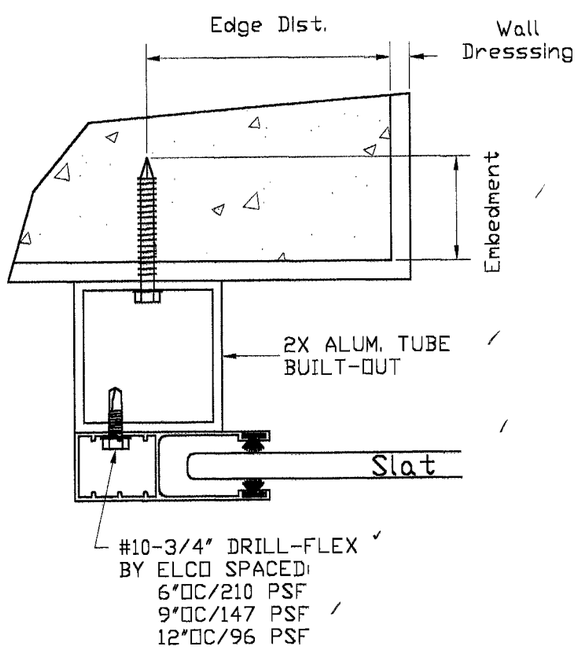

DESIGNED PRESSURES

	ANCHOR SPACING			
TRACK	12	9	6	3
ANCHOR A	165	<255	-	-
ANCHOR B	45	75	145	<255
ANCHOR C	175	<255	-	-

ANCHOR SCHEDULE

Type	Description	Embedment	Substract	Manufacturer
A	1/4" Tapcon	1 3/4"	Concrete	Elco
B	1/4" Tapcon	1 1/4"	Hollow Block	Elco
C	#14 SS Wood Screws	1 1/2"	Wood (SG=.55)	Elco

EDGE DISTANCE =3"

ANCHORAGE NOTE: ANCHOR SPACING IS CONTROLLED BY THE SPAN VS PRESSURE TABLES ON SHEET 3 OF 14

Manufacturer:
Atlantic Shutter Systems, Inc.
1513 ABSCO DRIVE
LITTLE RIVER, SC 29566
Tel.: (843) 399-6000

Product:
RE1000
EXTRUDED ALUMINUM ROLL SHUTTERS

Engineering:
EngCo Inc.
CA 8116
6971 W. Sunrise Blvd. 104
Plantation, Fl. 33313
Tel.: (954) 585-0304

SEP 20 2001

Engineer Seal
Pedro De Figueiredo
PE 52609

Date: 8/5/01
Scale: 1:1
Design by: PPMF

Dade County NOA:
APPROVED AS COMPLYING WITH THE SOUTH FLORIDA BUILDING CODE
DATE OCT 18 2001
BY
PRODUCT CONTROL DIVISION
BUILDING CODE COMPLIANCE OFFICE
ACCEPTANCE NO. 01-0424.05

Drawing Number
01-061R

STORM BAR SELECTION AND DEFLECTION TABLES

1/8 2X2 STORM BAR

MAXIMUM ALLOWABLE
STORM BAR HEIGHT
2 SPANS SHUTTER

	SHUTTER SPAN							
Pd	66	60	54	48	42	36	30	24
30	71	75	79	83	89	96	101	107
45	58	61	64	68	73	79	86	96
55	52	55	58	61	66	71	78	87
65	48	50	53	57	60	65	72	80
75	45	47	50	53	56	61	67	75
85	42	44	46	49	53	57	63	70
95	40	42	44	47	50	54	59	66
105	38	40	42	44	47	51	56	63
115	36	38	40	42	45	49	54	60
125	35	36	38	41	43	47	51	58
135	33	35	37	39	42	45	50	55
145	32	34	35	38	40	44	48	53
155	31	33	34	36	39	42	46	52
165	30	32	33	35	38	41	45	50
175	29	31	32	34	37	40	43	49
185	28	30	31	33	36	39	42	47
195	27	29	31	32	35	38	41	46
255	21	23	26	28	30	33	36	40

MAXIMUM ALLOWABLE
STORM BAR HEIGHT
3 SPANS SHUTTER

	SHUTTER SPAN							
Pd	66	60	54	48	42	36	30	24
30	76	80	84	89	95	100	105	111
45	62	65	68	73	78	84	92	100
55	56	59	62	66	70	76	83	93
65	47	52	57	60	64	70	76	85
75	41	45	50	56	60	65	71	80
85	36	39	44	49	56	61	67	75
95	32	35	39	44	51	58	63	71
105	29	32	35	40	46	53	60	67
115	26	29	32	36	42	49	57	64
125	24	27	30	33	38	45	54	61
135	22	25	27	31	35	41	50	59
145	21	23	26	29	33	39	46	57
155	19	21	24	27	31	36	43	54
165	18	20	22	25	29	34	41	51
175	17	19	21	24	27	32	38	48
185	16	18	20	22	26	30	36	45
195	15	17	19	21	24	29	34	43
255	12	13	14	16	19	22	26	33

STORM BAR MAXIMUM DEFLECTION
2 SPANS SHUTTER

	SHUTTER SPAN							
Pd	66	60	54	48	42	36	30	24
30	1.0	1.2	1.3	1.4	1.6	1.9	1.9	1.9
45	0.7	0.8	0.8	0.9	1.1	1.3	1.5	1.9
55	0.5	0.6	0.7	0.8	0.9	1.0	1.3	1.6
65	0.5	0.5	0.6	0.7	0.7	0.9	1.1	1.3
75	0.4	0.5	0.5	0.6	0.6	0.8	0.9	1.2
85	0.4	0.4	0.4	0.5	0.6	0.7	0.8	1.0
95	0.3	0.4	0.4	0.5	0.5	0.6	0.7	0.9
105	0.3	0.3	0.4	0.4	0.4	0.5	0.6	0.8
115	0.3	0.3	0.3	0.4	0.4	0.5	0.6	0.7
125	0.3	0.3	0.3	0.3	0.4	0.5	0.5	0.7
135	0.2	0.2	0.3	0.3	0.4	0.4	0.5	0.6
145	0.2	0.2	0.2	0.3	0.3	0.4	0.5	0.6
155	0.2	0.2	0.2	0.3	0.3	0.4	0.4	0.6
165	0.2	0.2	0.2	0.2	0.3	0.3	0.4	0.5
175	0.2	0.2	0.2	0.2	0.3	0.3	0.4	0.5
185	0.2	0.2	0.2	0.2	0.3	0.3	0.4	0.4
195	0.1	0.2	0.2	0.2	0.3	0.3	0.3	0.4
255	0.1	0.1	0.1	0.2	0.2	0.2	0.3	0.3

STORM BAR MAXIMUM DEFLECTION
3 SPANS SHUTTER

	SHUTTER SPAN							
Pd	66	60	54	48	42	36	30	24
30	1.2	1.3	1.5	1.6	1.9	2.0	2.0	2.0
45	0.8	0.9	0.9	1.1	1.3	1.5	1.7	2.0
55	0.6	0.7	0.8	0.9	1.0	1.2	1.4	1.8
65	0.4	0.5	0.7	0.7	0.8	1.0	1.2	1.5
75	0.3	0.3	0.5	0.6	0.7	0.9	1.0	1.3
85	0.2	0.2	0.3	0.4	0.6	0.8	0.9	1.2
95	0.1	0.2	0.2	0.3	0.5	0.7	0.8	1.0
105	0.1	0.1	0.2	0.2	0.4	0.5	0.7	0.9
115	0.1	0.1	0.1	0.2	0.3	0.4	0.7	0.8
125	0.0	0.1	0.1	0.1	0.2	0.3	0.6	0.8
135	0.0	0.1	0.1	0.1	0.2	0.2	0.5	0.7
145	0.0	0.0	0.1	0.1	0.1	0.2	0.4	0.7
155	0.0	0.0	0.1	0.1	0.1	0.2	0.3	0.6
165	0.0	0.0	0.0	0.1	0.1	0.1	0.3	0.5
175	0.0	0.0	0.0	0.1	0.1	0.1	0.2	0.4
185	0.0	0.0	0.0	0.0	0.1	0.1	0.2	0.3
195	0.0	0.0	0.0	0.0	0.0	0.1	0.1	0.3
255	0.0	0.0	0.0	0.0	0.0	0.0	0.1	0.1

DEFLECTION IN INCHES BASED ON MAX. STORM BAR HEIGHT
STORM BAR HEIGHT IN INCHES
Pd- DESIGNED PRESSURE IN PSF
SHUTTER SPAN IN INCHES

1/8 2X3 STORM BAR

MAXIMUM ALLOWABLE
STORM BAR HEIGHT
2 SPANS SHUTTER

	SHUTTER SPAN							
Pd	66	60	54	48	42	36	30	24
30	95	100	105	111	119	120	120	120
45	77	81	86	91	97	105	115	120
55	70	73	77	82	88	95	104	116
65	64	67	71	75	81	87	96	107
75	60	63	66	70	75	81	89	100
85	56	59	62	66	71	76	84	93
95	53	56	59	62	67	72	79	88
105	50	53	56	59	63	69	75	84
115	47	51	53	57	61	65	72	80
125	43	47	51	54	58	63	69	77
135	40	44	49	52	56	60	66	74
145	37	41	45	50	54	58	64	71
155	35	38	42	48	52	56	62	69
165	32	36	40	45	50	55	60	67
175	31	34	37	42	48	53	58	65
185	29	32	35	40	46	52	56	63
195	27	30	34	38	43	50	55	62
255	21	23	26	29	33	39	46	54

MAXIMUM ALLOWABLE
STORM BAR HEIGHT
3 SPANS SHUTTER

	SHUTTER SPAN							
Pd	66	60	54	48	42	36	30	24
30	101	106	112	119	120	120	120	120
45	68	75	83	94	104	112	120	120
55	56	61	68	77	88	101	111	120
65	47	52	58	65	74	87	102	114
75	41	45	50	56	64	75	90	106
85	36	39	44	49	57	66	79	99
95	32	35	39	44	51	59	71	89
105	29	32	35	40	46	53	64	80
115	26	29	32	36	42	49	59	73
125	24	27	30	33	38	45	54	67
135	22	25	27	31	35	41	50	62
145	21	23	26	29	33	39	46	58
155	19	21	24	27	31	36	43	54
165	18	20	22	25	29	34	41	51
175	17	19	21	24	27	32	38	48
185	16	18	20	22	26	30	36	45
195	15	17	19	21	24	29	34	43
255	12	13	14	16	19	22	26	33

STORM BAR MAXIMUM DEFLECTION
2 SPANS SHUTTER

	SHUTTER SPAN							
Pd	66	60	54	48	42	36	30	24
30	1.2	1.4	1.5	1.7	1.9	1.7	1.4	1.1
45	0.8	0.9	1.0	1.1	1.3	1.5	1.8	1.7
55	0.7	0.7	0.8	0.9	1.1	1.2	1.5	1.8
65	0.6	0.6	0.7	0.8	0.9	1.0	1.3	1.6
75	0.5	0.5	0.6	0.7	0.8	0.9	1.1	1.4
85	0.4	0.5	0.5	0.6	0.7	0.8	1.0	1.2
95	0.4	0.4	0.5	0.5	0.6	0.7	0.9	1.1
105	0.3	0.4	0.4	0.5	0.5	0.7	0.8	1.0
115	0.3	0.4	0.4	0.4	0.5	0.6	0.7	0.9
125	0.2	0.3	0.4	0.4	0.5	0.5	0.7	0.8
135	0.2	0.2	0.3	0.4	0.4	0.5	0.6	0.7
145	0.1	0.2	0.2	0.3	0.4	0.5	0.6	0.7
155	0.1	0.1	0.2	0.3	0.4	0.4	0.5	0.6
165	0.1	0.1	0.2	0.2	0.3	0.4	0.5	0.6
175	0.1	0.1	0.1	0.2	0.3	0.4	0.5	0.6
185	0.1	0.1	0.1	0.2	0.3	0.4	0.4	0.5
195	0.1	0.1	0.1	0.2	0.2	0.3	0.4	0.5
255	0.0	0.0	0.0	0.1	0.1	0.2	0.3	0.4

STORM BAR MAXIMUM DEFLECTION
3 SPANS SHUTTER

	SHUTTER SPAN							
Pd	66	60	54	48	42	36	30	24
30	1.4	1.5	1.7	2.0	1.8	1.5	1.3	1.0
45	0.4	0.6	0.8	1.1	1.5	1.7	1.9	1.5
55	0.2	0.3	0.4	0.6	0.9	1.4	1.7	1.9
65	0.1	0.2	0.3	0.4	0.6	0.9	1.4	1.8
75	0.1	0.1	0.2	0.2	0.4	0.6	1.0	1.5
85	0.1	0.1	0.1	0.2	0.3	0.4	0.7	1.3
95	0.0	0.1	0.1	0.1	0.2	0.3	0.5	1.0
105	0.0	0.0	0.1	0.1	0.1	0.2	0.4	0.7
115	0.0	0.0	0.0	0.1	0.1	0.2	0.3	0.5
125	0.0	0.0	0.0	0.0	0.1	0.1	0.2	0.4
135	0.0	0.0	0.0	0.0	0.1	0.1	0.2	0.3
145	0.0	0.0	0.0	0.0	0.0	0.1	0.1	0.3
155	0.0	0.0	0.0	0.0	0.0	0.1	0.1	0.2
165	0.0	0.0	0.0	0.0	0.0	0.1	0.1	0.2
175	0.0	0.0	0.0	0.0	0.0	0.0	0.1	0.2
185	0.0	0.0	0.0	0.0	0.0	0.0	0.1	0.1
195	0.0	0.0	0.0	0.0	0.0	0.0	0.1	0.1
255	0.0	0.0	0.0	0.0	0.0	0.0	0.0	0.0

DEFLECTION IN INCHES BASED ON MAX. STORM BAR HEIGHT
STORM BAR HEIGHT IN INCHES
Pd- DESIGNED PRESSURE IN PSF
SHUTTER SPAN IN INCHES

NOTE: STORM BARS ALLOWABLE HEIGHT ARE CONTROLLED BY THE MAXIMUM ALLOWABLE HEADER END REACTION.

Manufacturer:
Atlantic Shutter Systems, Inc.
1513 ABSCO DRIVE
LITTLE RIVER, SC 29566
Tel.: (843) 399-6000

Product:
RE1000
EXTRUDED ALUMINUM ROLL SHUTTERS

Engineering:
EngCo Inc.
CA 8116
6971 W. Sunrise Blvd. 104
Plantation, Fl. 33313
Tel.: (954) 585-0304

SEP 2 0 2001

Engineer Seal
Pedro De Figueiredo
PE 52609

Date: 8/5/01
Scale: NA
Design by: PPMF

Dade County NOA:
APPROVED AS COMPLIED WITH THE SOUTH FLORIDA BUILDING CODE
DATE OCT 1 8 2001
BY
PRODUCT CONTROL DIVISION
BUILDING CODE COMPLIANCE OFFICE
ACCEPTANCE NO. 01-0424.05

Drawing Number
01-061R

STORM BAR SELECTION AND DEFLECTION TABLES

1/8 2X4 STORM BAR

MAXIMUM ALLOWABLE
STORM BAR HEIGHT
2 SPANS SHUTTER

	SHUTTER SPAN							
Pd	66	60	54	48	42	36	30	24
30	117	120	120	120	120	120	120	120
45	95	100	105	112	119	120	120	120
55	86	90	95	101	108	117	120	120
65	79	83	87	93	99	107	117	120
75	72	77	81	86	92	100	109	120
85	63	70	76	81	87	94	103	115
95	57	62	69	77	82	89	97	109
105	51	56	63	71	78	84	92	103
115	47	52	57	65	74	80	88	99
125	43	47	53	59	68	77	85	95
135	40	44	49	55	63	73	81	91
145	37	41	45	51	58	68	78	88
155	35	38	42	48	55	64	76	85
165	32	36	40	45	51	60	72	82
175	31	34	37	42	48	56	68	80
185	29	32	35	40	46	53	64	78
195	27	30	34	38	43	51	61	76
255	21	23	26	29	33	39	46	58

MAXIMUM ALLOWABLE
STORM BAR HEIGHT
3 SPANS SHUTTER

	SHUTTER SPAN							
Pd	66	60	54	48	42	36	30	24
30	102	113	120	120	120	120	120	120
45	68	75	83	94	107	120	120	120
55	56	61	68	77	88	102	120	120
65	47	52	58	65	74	87	104	120
75	41	45	50	56	64	75	90	113
85	36	39	44	49	57	66	79	99
95	32	35	39	44	51	59	71	89
105	29	32	35	40	46	53	64	80
115	26	29	32	36	42	49	59	73
125	24	27	30	33	38	45	54	67
135	22	25	27	31	35	41	50	62
145	21	23	26	29	33	39	46	58
155	19	21	24	27	31	36	43	54
165	18	20	22	25	29	34	41	51
175	17	19	21	24	27	32	38	48
185	16	18	20	22	26	30	36	45
195	15	17	19	21	24	29	34	43
255	12	13	14	16	19	22	26	33

STORM BAR MAXIMUM DEFLECTION
2 SPANS SHUTTER

	SHUTTER SPAN							
Pd	66	60	54	48	42	36	30	24
30	1.4	1.4	1.3	1.1	1.0	0.8	0.7	0.6
45	0.9	1.0	1.1	1.3	1.4	1.3	1.1	0.8
55	0.8	0.8	0.9	1.0	1.2	1.4	1.3	1.0
65	0.6	0.7	0.8	0.9	1.0	1.2	1.4	1.2
75	0.5	0.6	0.7	0.7	0.9	1.0	1.2	1.4
85	0.3	0.5	0.6	0.7	0.8	0.9	1.1	1.4
95	0.3	0.3	0.4	0.6	0.7	0.8	1.0	1.2
105	0.2	0.2	0.3	0.5	0.6	0.7	0.9	1.1
115	0.1	0.2	0.2	0.4	0.5	0.6	0.8	1.0
125	0.1	0.1	0.2	0.3	0.4	0.6	0.7	0.9
135	0.1	0.1	0.2	0.2	0.3	0.5	0.7	0.8
145	0.1	0.1	0.1	0.2	0.3	0.4	0.6	0.8
155	0.1	0.1	0.1	0.1	0.2	0.4	0.6	0.7
165	0.0	0.1	0.1	0.1	0.2	0.3	0.5	0.7
175	0.0	0.1	0.1	0.1	0.1	0.2	0.4	0.7
185	0.0	0.0	0.1	0.1	0.1	0.2	0.4	0.6
195	0.0	0.0	0.1	0.1	0.1	0.2	0.3	0.6
255	0.0	0.0	0.0	0.0	0.0	0.1	0.1	0.3

STORM BAR MAXIMUM DEFLECTION
3 SPANS SHUTTER

	SHUTTER SPAN							
Pd	66	60	54	48	42	36	30	24
30	0.7	1.0	1.1	1.0	0.9	0.7	0.6	0.5
45	0.2	0.3	0.4	0.6	0.8	1.1	0.9	0.7
55	0.1	0.2	0.2	0.3	0.5	0.7	1.1	0.9
65	0.1	0.1	0.1	0.2	0.3	0.4	0.8	1.1
75	0.0	0.1	0.1	0.1	0.2	0.3	0.5	1.0
85	0.0	0.0	0.1	0.1	0.1	0.2	0.3	0.7
95	0.0	0.0	0.0	0.1	0.1	0.1	0.2	0.5
105	0.0	0.0	0.0	0.0	0.1	0.1	0.2	0.3
115	0.0	0.0	0.0	0.0	0.1	0.1	0.1	0.3
125	0.0	0.0	0.0	0.0	0.0	0.1	0.1	0.2
135	0.0	0.0	0.0	0.0	0.0	0.0	0.1	0.2
145	0.0	0.0	0.0	0.0	0.0	0.0	0.1	0.1
155	0.0	0.0	0.0	0.0	0.0	0.0	0.1	0.1
165	0.0	0.0	0.0	0.0	0.0	0.0	0.0	0.1
175	0.0	0.0	0.0	0.0	0.0	0.0	0.0	0.1
185	0.0	0.0	0.0	0.0	0.0	0.0	0.0	0.1
195	0.0	0.0	0.0	0.0	0.0	0.0	0.0	0.1
255	0.0	0.0	0.0	0.0	0.0	0.0	0.0	0.0

DEFLECTION IN INCHES BASED ON MAX. STORM BAR HEIGHT
STORM BAR HEIGHT IN INCHES
Pd- DESIGNED PRESSURE IN PSF
SHUTTER SPAN IN INCHES

1/8 2X5 STORM BAR

MAXIMUM ALLOWABLE
STORM BAR HEIGHT
2 SPANS SHUTTER

	SHUTTER SPAN							
Pd	66	60	54	48	42	36	30	24
30	120	120	120	120	120	120	120	120
45	112	117	120	120	120	120	120	120
55	98	106	112	119	120	120	120	120
65	83	92	102	109	117	120	120	120
75	72	79	88	99	109	117	120	120
85	63	70	78	87	100	110	120	120
95	57	62	69	78	89	104	114	120
105	51	56	63	71	81	94	109	120
115	47	52	57	65	74	86	104	116
125	43	47	53	59	68	79	95	111
135	40	44	49	55	63	73	88	107
145	37	41	45	51	58	68	82	103
155	35	38	42	48	55	64	77	96
165	32	36	40	45	51	60	72	90
175	31	34	37	42	48	56	68	85
185	29	32	35	40	46	53	64	80
195	27	30	34	38	43	51	61	76
255	21	23	26	29	33	39	46	58

MAXIMUM ALLOWABLE
STORM BAR HEIGHT
3 SPANS SHUTTER

	SHUTTER SPAN							
Pd	66	60	54	48	42	36	30	24
30	102	113	120	120	120	120	120	120
45	68	75	83	94	107	120	120	120
55	56	61	68	77	88	102	120	120
65	47	52	58	65	74	87	104	120
75	41	45	50	56	64	75	90	113
85	36	39	44	49	57	66	79	99
95	32	35	39	44	51	59	71	89
105	29	32	35	40	46	53	64	80
115	26	29	32	36	42	49	59	73
125	24	27	30	33	38	45	54	67
135	22	25	27	31	35	41	50	62
145	21	23	26	29	33	39	46	58
155	19	21	24	27	31	36	43	54
165	18	20	22	25	29	34	41	51
175	17	19	21	24	27	32	38	48
185	16	18	20	22	26	30	36	45
195	15	17	19	21	24	29	34	43
255	12	13	14	16	19	22	26	33

STORM BAR MAXIMUM DEFLECTION
2 SPANS SHUTTER

	SHUTTER SPAN							
Pd	66	60	54	48	42	36	30	24
30	0.9	0.8	0.7	0.6	0.6	0.5	0.4	0.3
45	1.0	1.1	1.1	1.0	0.9	0.7	0.6	0.5
55	0.7	0.9	1.0	1.2	1.0	0.9	0.7	0.6
65	0.4	0.6	0.8	1.0	1.1	1.1	0.9	0.7
75	0.3	0.4	0.5	0.8	1.0	1.1	1.0	0.8
85	0.2	0.3	0.4	0.5	0.8	1.0	1.1	0.9
95	0.1	0.2	0.3	0.4	0.5	0.9	1.0	1.0
105	0.1	0.1	0.2	0.3	0.4	0.6	1.0	1.1
115	0.1	0.1	0.1	0.2	0.3	0.5	0.9	1.1
125	0.1	0.1	0.1	0.2	0.2	0.4	0.7	1.0
135	0.0	0.1	0.1	0.1	0.2	0.3	0.5	0.9
145	0.0	0.1	0.1	0.1	0.1	0.2	0.4	0.9
155	0.0	0.0	0.1	0.1	0.1	0.2	0.4	0.7
165	0.0	0.0	0.0	0.1	0.1	0.2	0.3	0.6
175	0.0	0.0	0.0	0.1	0.1	0.1	0.2	0.5
185	0.0	0.0	0.0	0.0	0.1	0.1	0.2	0.4
195	0.0	0.0	0.0	0.0	0.1	0.1	0.2	0.3
255	0.0	0.0	0.0	0.0	0.0	0.0	0.1	0.2

STORM BAR MAXIMUM DEFLECTION
3 SPANS SHUTTER

	SHUTTER SPAN							
Pd	66	60	54	48	42	36	30	24
30	0.4	0.6	0.6	0.6	0.5	0.4	0.4	0.3
45	0.1	0.2	0.2	0.3	0.5	0.6	0.5	0.4
55	0.1	0.1	0.1	0.2	0.3	0.4	0.7	0.5
65	0.0	0.1	0.1	0.1	0.2	0.3	0.4	0.6
75	0.0	0.0	0.0	0.1	0.1	0.2	0.3	0.6
85	0.0	0.0	0.0	0.0	0.1	0.1	0.2	0.4
95	0.0	0.0	0.0	0.0	0.1	0.1	0.1	0.3
105	0.0	0.0	0.0	0.0	0.0	0.1	0.1	0.2
115	0.0	0.0	0.0	0.0	0.0	0.0	0.1	0.1
125	0.0	0.0	0.0	0.0	0.0	0.0	0.1	0.1
135	0.0	0.0	0.0	0.0	0.0	0.0	0.0	0.1
145	0.0	0.0	0.0	0.0	0.0	0.0	0.0	0.1
155	0.0	0.0	0.0	0.0	0.0	0.0	0.0	0.1
165	0.0	0.0	0.0	0.0	0.0	0.0	0.0	0.1
175	0.0	0.0	0.0	0.0	0.0	0.0	0.0	0.0
185	0.0	0.0	0.0	0.0	0.0	0.0	0.0	0.0
195	0.0	0.0	0.0	0.0	0.0	0.0	0.0	0.0
255	0.0	0.0	0.0	0.0	0.0	0.0	0.0	0.0

DEFLECTION IN INCHES BASED ON MAX. STORM BAR HEIGHT
STORM BAR HEIGHT IN INCHES
Pd- DESIGNED PRESSURE IN PSF
SHUTTER SPAN IN INCHES

NOTE: STORM BARS ALLOWABLE HEIGHT ARE CONTROLLED BY THE MAXIMUM ALLOWABLE HEADER END REACTION.

Manufacturer:
Atlantic Shutter Systems, Inc.
1513 ABSCO DRIVE
LITTLE RIVER, SC 29566
Tel.: (843) 399-6000

Product:
RE1000
EXTRUDED ALUMINUM ROLL SHUTTERS

Engineering:
EngCo Inc.
CA 8116
6971 W. Sunrise Blvd. 104
Plantation, Fl. 33313
Tel.: (954) 585-0304

SEP 2 0 2001
Engineer Seal
Pedro De Figueiredo
PE 52609

Date: 8/5/01
Scale: NA
Design by: PPMF

Dade County NOA:
APPROVED AS CONFORMING TO THE
SOUTH FLORIDA BUILDING CODE
DATE OCT 1 8 2001
BY
PRODUCT CONTROL DIVISION
BUILDING CODE COMPLIANCE OFFICE
ACCEPTANCE NO. 01-0424.05

Drawing Number
01-061R

STORM BAR ANCHORAGE

WALL MOUNTED STORM BARS ANCHORED TO CONCRETE OR WOOD

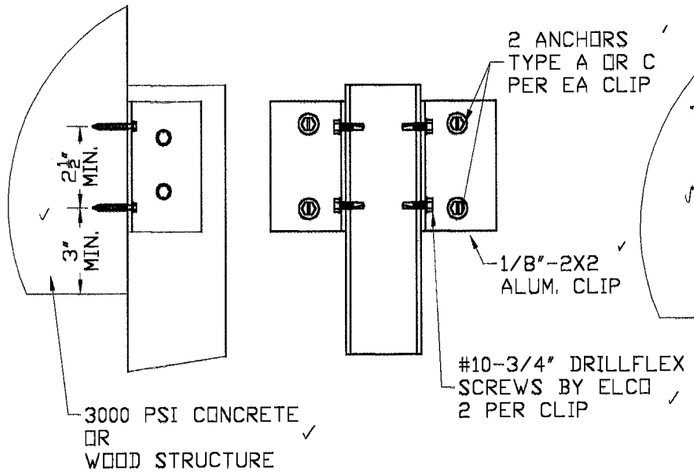

WALL MOUNTED STORM BARS ANCHORED TO HOLLOW BLOCK WALL

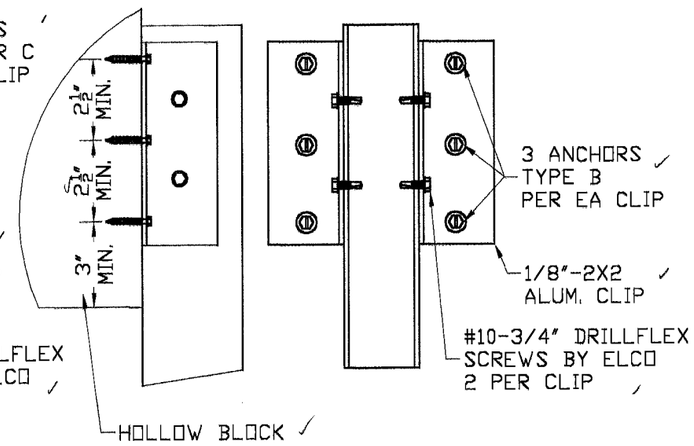

NOTE: ANCHORAGE IS CONTROLLED BY THE MAXIMUM STORM BAR HEIGHT SELECTION TABLES ON SHEETS 5 AND 6 OF 14

FLOOR/CEILING MOUNTED STORM BARS ANCHORED TO CONCRETE SLAB

Clip Size	2 SPANS ALLOWABLE Pd (PSF)	3 SPANS ALLOWABLE Pd (PSF)	(s)	STORM BARS
2"	<= 30	<= 30	1.5	2"
3"	<= 75	<=255	2.0	2"
3"	<= 45	<=255	2.0	3"
4"	<=105	<=255	3.0	3"
4"	<= 65	<=255	3.0	4"
5"	<=255	<=255	4.0	2", 3", 4", 5"

Pd Allowable designed pressure

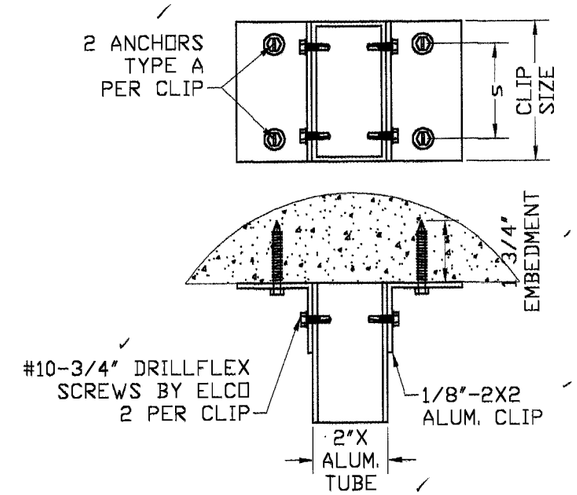

STORM BARS MOUNTED ON BUILT-OUT ALUM. TUBE AND SHUTTER HEADER

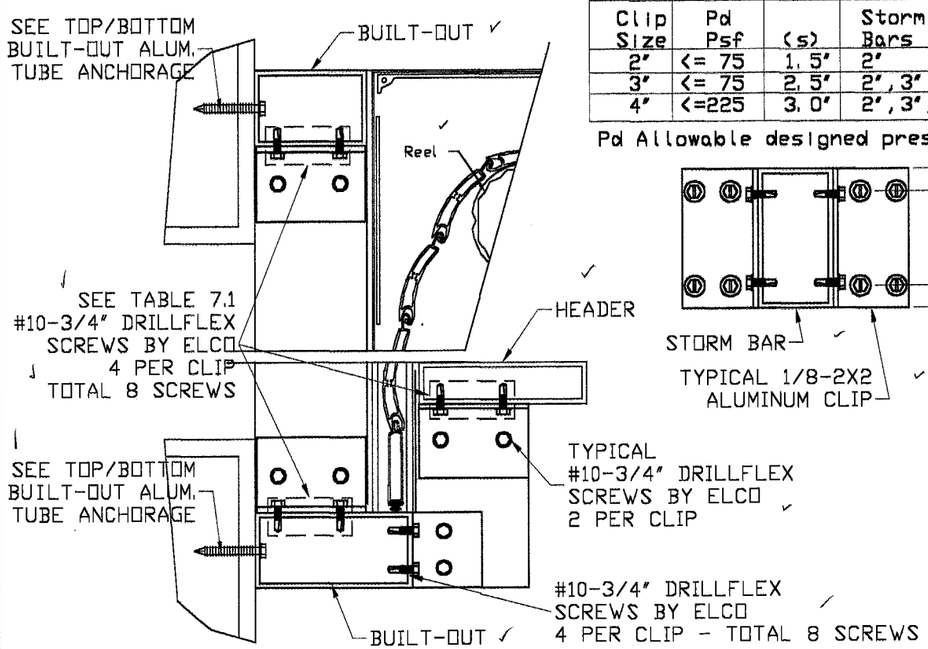

TABLE 7.1

Clip Size	Pd Psf	(s)	Storm Bars
2"	<= 75	1.5'	2"
3"	<= 75	2.5'	2", 3"
4"	<=225	3.0'	2", 3", 4", 5"

Pd Allowable designed pressure

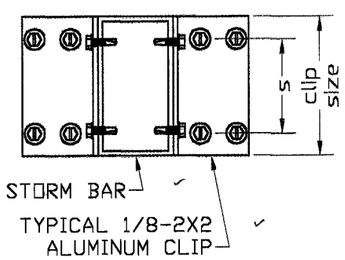

ANCHOR SCHEDULE

Type	Description	Embed.	Substract	Manufacturer
A	1/4" Tapcon	1 3/4"	Concrete	Elco
B	1/4" Tapcon	1 1/4"	Hollow Block	Elco
C	#14 SS Wood Screws	1 1/2"	Wood (SG=.55)	Elco

EDGE DISTANCE =3"

TOP/BOTTOM BUILT-OUT ALUMINUM TUBE ANCHORAGE

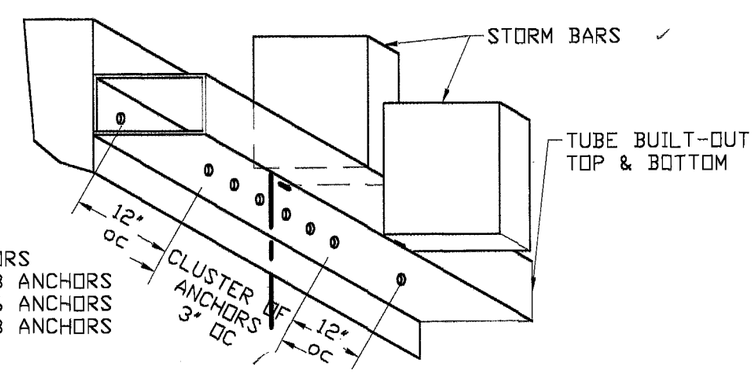

CLUSTER OF ANCHORS
TYPE A- MIN. OF 3 ANCHORS
TYPE B- MIN. OF 6 ANCHORS
TYPE C- MIN. OF 3 ANCHORS

Manufacturer:
Atlantic Shutter Systems, Inc.
1513 ABSCO DRIVE
LITTLE RIVER, SC 29566
Tel.: (843) 399-6000

Product:
RE1000
EXTRUDED ALUMINUM ROLL SHUTTERS

Engineering:
EngCo Inc.
CA 8116
6971 W. Sunrise Blvd. 104
Plantation, Fl. 33313
Tel.: (954) 585-0304

SEP 2 0 2001

Engineer Seal
Pedro De Figueiredo
PE 52609

Date: 8/5/01
Scale: NA
Design by: PPMF

Dade County NOA:
APPROVED AS COMPLYING WITH THE
SOUTH FLORIDA BUILDING CODE
DATE OCT 1 8 2001
BY
PRODUCT CONTROL DIVISION
BUILDING CODE COMPLIANCE OFFICE
ACCEPTANCE NO. 01-0424.05

Drawing Number
01-061R

HEADER SELECTION AND DEFLECTION TABLES

1/8 2X2 STORM BAR

HEADER SELECTION 2 SPANS SHUTTER

	SHUTTER SPAN							
Pd	66	60	54	48	42	36	30	24
30	2X4	2X3	2X3	2X3	2X2	2X2	2X2	2X2
45	2X4	2X4	2X3	2X3	2X3	2X2	2X2	2X2
55	2X4	2X4	2X4	2X3	2X3	2X2	2X2	2X2
65	2X4	2X4	2X4	2X3	2X3	2X3	2X2	2X2
75	2X5	2X4	2X4	2X4	2X3	2X3	2X2	2X2
85	2X5	2X4	2X4	2X4	2X3	2X3	2X2	2X2
95	2X5	2X5	2X4	2X4	2X3	2X3	2X2	2X2
105	2X5	2X5	2X4	2X4	2X3	2X3	2X3	2X2
115	2X5	2X5	2X4	2X4	2X4	2X3	2X3	2X2
125	2X5	2X5	2X5	2X4	2X4	2X3	2X3	2X2
135	2X6	2X5	2X5	2X4	2X4	2X3	2X3	2X2
145	2X6	2X5	2X5	2X4	2X4	2X3	2X3	2X2
155	2X6	2X5	2X5	2X4	2X4	2X3	2X3	2X2
165	2X6	2X5	2X5	2X4	2X4	2X3	2X3	2X2
175	2X6	2X6	2X5	2X4	2X4	2X4	2X3	2X2
185	2X6	2X6	2X5	2X5	2X4	2X4	2X3	2X2
195	2X6	2X6	2X5	2X5	2X4	2X4	2X3	2X3
255	2X6	2X6	2X6	2X5	2X4	2X4	2X3	2X3

HEADER SELECTION 3 SPANS SHUTTER

	SHUTTER SPAN							
Pd	66	60	54	48	42	36	30	24
30	2X6	2X6	2X5	2X4	2X4	2X3	2X2	2X2
45	NA	2X6	2X5	2X5	2X4	2X3	2X3	2X2
55	NA	2X6	2X6	2X5	2X4	2X4	2X3	2X3
65	NA	2X6	2X6	2X5	2X4	2X4	2X3	2X3
75	NA	2X6	2X6	2X5	2X5	2X4	2X3	2X3
85	NA	2X6	2X6	2X5	2X5	2X4	2X3	2X3
95	NA	2X6	2X6	2X5	2X5	2X4	2X4	2X3
105	NA	2X6	2X6	2X5	2X5	2X4	2X4	2X3
115	NA	2X6	2X6	2X5	2X5	2X4	2X4	2X3
125	NA	2X6	2X6	2X5	2X5	2X4	2X4	2X3
135	NA	2X6	2X6	2X5	2X5	2X4	2X4	2X3
145	NA	2X6	2X6	2X5	2X5	2X4	2X4	2X3
155	NA	2X6	2X6	2X5	2X5	2X4	2X4	2X3
165	NA	2X6	2X6	2X5	2X5	2X4	2X4	2X3
175	NA	2X6	2X6	2X5	2X5	2X4	2X4	2X3
185	NA	2X6	2X6	2X5	2X5	2X4	2X4	2X3
195	NA	2X6	2X6	2X5	2X5	2X4	2X4	2X3
255	NA	2X6	2X6	2X5	2X5	2X4	2X4	2X3

MAXIMUM HEADER DEFLECTION 2 SPANS SHUTTER

	SHUTTER SPAN							
Pd	66	60	54	48	42	36	30	24
30	1.0	1.4	1.0	0.7	1.1	0.6	0.3	0.1
45	1.2	0.9	1.2	0.8	0.5	0.8	0.4	0.2
55	1.3	1.0	0.7	0.9	0.6	0.9	0.5	0.2
65	1.4	1.0	0.7	1.0	0.6	0.3	0.5	0.2
75	0.9	1.1	0.8	0.5	0.6	0.4	0.5	0.2
85	0.9	1.2	0.8	0.5	0.7	0.4	0.6	0.3
95	1.0	0.7	0.9	0.6	0.7	0.4	0.6	0.3
105	1.1	0.8	0.9	0.6	0.8	0.4	0.2	0.3
115	1.1	0.8	0.9	0.6	0.4	0.5	0.2	0.3
125	1.2	0.8	0.6	0.7	0.4	0.5	0.3	0.3
135	0.7	0.9	0.6	0.7	0.4	0.5	0.3	0.3
145	0.8	0.9	0.6	0.7	0.4	0.5	0.3	0.3
155	0.8	0.9	0.6	0.7	0.5	0.5	0.3	0.4
165	0.8	1.0	0.6	0.7	0.5	0.6	0.3	0.4
175	0.8	0.6	0.7	0.8	0.5	0.3	0.3	0.4
185	0.9	0.6	0.7	0.5	0.5	0.3	0.3	0.4
195	0.9	0.6	0.7	0.5	0.5	0.3	0.3	0.1
255	0.9	0.7	0.5	0.5	0.6	0.3	0.4	0.2

MAXIMUM HEADER DEFLECTION 3 SPANS SHUTTER

	SHUTTER SPAN							
Pd	66	60	54	48	42	36	30	24
30	1.9	1.4	1.5	1.7	1.1	1.3	1.7	0.7
45	NA	1.7	1.8	1.2	1.3	1.6	0.8	1.0
55	NA	1.9	1.3	1.4	1.5	0.9	0.9	0.4
65	NA	1.9	1.4	1.5	1.6	0.9	1.0	0.5
75	NA	1.9	1.4	1.6	1.0	1.0	1.1	0.5
85	NA	1.9	1.4	1.6	1.0	1.1	1.1	0.5
95	NA	1.9	1.4	1.6	1.1	1.1	0.6	0.6
105	NA	1.9	1.4	1.6	1.1	1.1	0.6	0.6
115	NA	1.9	1.4	1.5	1.1	1.2	0.7	0.6
125	NA	1.9	1.4	1.5	1.0	1.2	0.7	0.6
135	NA	1.9	1.4	1.6	1.0	1.1	0.7	0.7
145	NA	1.9	1.4	1.6	1.0	1.2	0.7	0.7
155	NA	1.9	1.4	1.6	1.1	1.2	0.7	0.7
165	NA	1.9	1.4	1.5	1.0	1.2	0.7	0.7
175	NA	1.9	1.4	1.6	1.0	1.2	0.7	0.7
185	NA	1.9	1.4	1.5	1.1	1.1	0.7	0.7
195	NA	1.9	1.4	1.5	1.0	1.2	0.7	0.7
255	NA	1.9	1.3	1.5	1.1	1.2	0.7	0.7

DEFLECTION IN INCHES BASED ON HEADER SELECTION
Pd- DESIGNED PRESSURE IN PSF
SHUTTER SPAN IN INCHES

1/8 2X3 STORM BAR

HEADER SELECTION 2 SPANS SHUTTER

	SHUTTER SPAN							
Pd	66	60	54	48	42	36	30	24
30	2X4	2X4	2X4	2X3	2X3	2X2	2X2	2X2
45	2X5	2X4	2X4	2X4	2X3	2X3	2X2	2X2
55	2X5	2X5	2X4	2X4	2X3	2X3	2X3	2X2
65	2X5	2X5	2X4	2X4	2X4	2X3	2X3	2X2
75	2X6	2X5	2X5	2X4	2X4	2X3	2X3	2X2
85	2X6	2X5	2X5	2X4	2X4	2X3	2X3	2X2
95	2X6	2X5	2X5	2X4	2X4	2X3	2X3	2X2
105	2X6	2X6	2X5	2X5	2X4	2X4	2X3	2X3
115	2X6	2X6	2X5	2X5	2X4	2X4	2X3	2X3
125	2X6	2X6	2X5	2X5	2X4	2X4	2X3	2X3
135	2X6	2X6	2X6	2X5	2X4	2X4	2X3	2X3
145	2X6	2X6	2X5	2X5	2X5	2X4	2X3	2X3
155	2X6	2X6	2X5	2X5	2X5	2X4	2X3	2X3
165	2X6	2X6	2X6	2X5	2X5	2X4	2X3	2X3
175	2X6	2X6	2X5	2X5	2X5	2X4	2X4	2X3
185	2X6	2X6	2X5	2X5	2X5	2X4	2X4	2X3
195	2X6	2X6	2X6	2X5	2X5	2X4	2X4	2X3
255	2X6	2X6	2X6	2X5	2X5	2X4	2X4	2X3

HEADER SELECTION 3 SPANS SHUTTER

	SHUTTER SPAN							
Pd	66	60	54	48	42	36	30	24
30	NA	2X6	2X6	2X5	2X4	2X3	2X3	2X2
45	NA	2X6	2X6	2X5	2X5	2X4	2X3	2X3
55	NA	2X6	2X6	2X5	2X5	2X4	2X4	2X3
65	NA	2X6	2X6	2X5	2X5	2X4	2X4	2X3
75	NA	2X6	2X6	2X5	2X5	2X4	2X4	2X3
85	NA	2X6	2X6	2X5	2X5	2X4	2X4	2X3
95	NA	2X6	2X6	2X5	2X5	2X4	2X4	2X3
105	NA	2X6	2X6	2X5	2X5	2X4	2X4	2X3
115	NA	2X6	2X6	2X5	2X5	2X4	2X4	2X3
125	NA	2X6	2X6	2X5	2X5	2X4	2X4	2X3
135	NA	2X6	2X6	2X5	2X5	2X4	2X4	2X3
145	NA	2X6	2X6	2X5	2X5	2X4	2X4	2X3
155	NA	2X6	2X6	2X5	2X5	2X4	2X4	2X3
165	NA	2X6	2X6	2X5	2X5	2X4	2X4	2X3
175	NA	2X6	2X6	2X5	2X5	2X4	2X4	2X3
185	NA	2X6	2X6	2X5	2X5	2X4	2X4	2X3
195	NA	2X6	2X6	2X5	2X5	2X4	2X4	2X3
255	NA	2X6	2X6	2X5	2X5	2X4	2X4	2X3

MAXIMUM HEADER DEFLECTION 2 SPANS SHUTTER

	SHUTTER SPAN							
Pd	66	60	54	48	42	36	30	24
30	1.3	0.9	0.7	0.9	0.5	0.8	0.4	0.2
45	0.9	1.1	0.8	0.5	0.7	0.4	0.6	0.2
55	1.0	0.7	0.9	0.6	0.7	0.4	0.2	0.3
65	1.1	0.8	1.0	0.6	0.4	0.5	0.2	0.3
75	0.7	0.9	0.6	0.7	0.4	0.5	0.3	0.3
85	0.8	0.9	0.6	0.7	0.5	0.5	0.3	0.3
95	0.8	1.0	0.7	0.8	0.5	0.6	0.3	0.4
105	0.9	0.6	0.7	0.5	0.5	0.3	0.3	0.1
115	0.9	0.7	0.7	0.5	0.5	0.3	0.3	0.2
125	0.9	0.7	0.8	0.5	0.5	0.3	0.3	0.2
135	0.9	0.7	0.5	0.5	0.6	0.3	0.4	0.2
145	0.9	0.7	0.8	0.5	0.3	0.3	0.4	0.2
155	0.9	0.7	0.8	0.5	0.3	0.4	0.4	0.2
165	0.9	0.7	0.5	0.5	0.4	0.4	0.4	0.2
175	0.9	0.7	0.8	0.5	0.4	0.4	0.2	0.2
185	0.9	0.7	0.8	0.5	0.4	0.4	0.2	0.2
195	0.9	0.7	0.5	0.5	0.4	0.4	0.2	0.2
255	0.9	0.7	0.5	0.5	0.4	0.4	0.2	0.2

MAXIMUM HEADER DEFLECTION 3 SPANS SHUTTER

	SHUTTER SPAN							
Pd	66	60	54	48	42	36	30	24
30	NA	1.8	1.3	1.3	1.4	1.5	0.7	0.8
45	NA	1.9	1.4	1.6	1.0	1.0	1.1	0.4
55	NA	1.9	1.4	1.6	1.1	1.1	0.6	0.5
65	NA	1.9	1.4	1.6	1.1	1.2	0.7	0.6
75	NA	1.9	1.4	1.6	1.1	1.2	0.7	0.7
85	NA	1.9	1.4	1.6	1.1	1.2	0.7	0.7
95	NA	1.9	1.4	1.6	1.1	1.2	0.7	0.7
105	NA	1.9	1.4	1.6	1.1	1.1	0.7	0.7
115	NA	1.9	1.4	1.5	1.1	1.2	0.7	0.7
125	NA	1.9	1.4	1.5	1.0	1.2	0.7	0.7
135	NA	1.9	1.4	1.6	1.0	1.1	0.7	0.7
145	NA	1.9	1.4	1.6	1.0	1.2	0.7	0.7
155	NA	1.9	1.4	1.6	1.1	1.2	0.7	0.7
165	NA	1.9	1.4	1.5	1.0	1.2	0.7	0.7
175	NA	1.9	1.4	1.6	1.0	1.2	0.7	0.7
185	NA	1.9	1.4	1.5	1.1	1.1	0.7	0.7
195	NA	1.9	1.4	1.5	1.0	1.2	0.7	0.7
255	NA	1.9	1.3	1.5	1.1	1.2	0.7	0.7

DEFLECTION IN INCHES BASED ON HEADER SELECTION
Pd- DESIGNED PRESSURE IN PSF
SHUTTER SPAN IN INCHES

NOTE: HEADER SELECTION AND DEFLECTION ARE CONTROLLED BY THE MAXIMUM ALLOWABLE STORM BARS HEIGHT TABLES ON SHEETS 5 AND 6 OF 14

Manufacturer:
Atlantic Shutter Systems, Inc.
1513 ABSCO DRIVE
LITTLE RIVER, SC 29566
Tel.: (843) 399-6000

Product:
RE1000
EXTRUDED ALUMINUM ROLL SHUTTERS

Engineering:
EngCo Inc.
CA 8116
6971 W. Sunrise Blvd. 104
Plantation, Fl. 33313
Tel.: (954) 585-0304

SEP 2 0 2001

Engineer Seal
Pedro De Figueiredo
PE 52609

Date: 8/5/01
Scale: NA
Design by: PPMF

Dade County NOA
APPROVED AS COMPLIED WITH THE SOUTH FLORIDA BUILDING CODE
DATE OCT 1 8 2001
BY
PRODUCT CONTROL DIVISION
BUILDING CODE COMPLIANCE OFFICE
ACCEPTANCE NO. 01-0424.05

Drawing Number
01-061R

HEADER SELECTION AND DEFLECTION TABLES

1/8 2X4 STORM BAR

HEADER SELECTION 2 SPANS SHUTTER

	SHUTTER SPAN							
Pd	66	60	54	48	42	36	30	24
30	2X5	2X4	2X4	2X3	2X3	2X2	2X2	2X2
45	2X5	2X5	2X5	2X4	2X4	2X3	2X2	2X2
55	2X6	2X5	2X5	2X4	2X4	2X3	2X3	2X2
65	2X6	2X6	2X5	2X5	2X4	2X3	2X3	2X2
75	2X6	2X6	2X5	2X5	2X4	2X4	2X3	2X3
85	2X6	2X6	2X5	2X5	2X4	2X4	2X3	2X3
95	2X6	2X6	2X5	2X5	2X5	2X4	2X3	2X3
105	2X6	2X6	2X6	2X5	2X5	2X4	2X3	2X3
115	2X6	2X6	2X5	2X5	2X5	2X4	2X4	2X3
125	2X6	2X6	2X6	2X5	2X5	2X4	2X4	2X3
135	2X6	2X6	2X6	2X5	2X5	2X4	2X4	2X3
145	2X6	2X6	2X5	2X5	2X5	2X4	2X4	2X3
155	2X6	2X6	2X5	2X5	2X5	2X4	2X4	2X3
165	2X6	2X6	2X6	2X5	2X5	2X4	2X4	2X3
175	2X6	2X6	2X5	2X5	2X5	2X4	2X4	2X3
185	2X6	2X6	2X5	2X5	2X5	2X4	2X4	2X3
195	2X6	2X6	2X6	2X5	2X5	2X4	2X4	2X3
255	2X6	2X6	2X6	2X5	2X5	2X4	2X4	2X3

HEADER SELECTION 3 SPANS SHUTTER

	SHUTTER SPAN							
Pd	66	60	54	48	42	36	30	24
30	NA	2X6	2X6	2X5	2X4	2X3	2X3	2X2
45	NA	2X6	2X6	2X5	2X5	2X4	2X3	2X3
55	NA	2X6	2X6	2X5	2X5	2X4	2X4	2X3
65	NA	2X6	2X6	2X5	2X5	2X4	2X4	2X3
75	NA	2X6	2X6	2X5	2X5	2X4	2X4	2X3
85	NA	2X6	2X6	2X5	2X5	2X4	2X4	2X3
95	NA	2X6	2X6	2X5	2X5	2X4	2X4	2X3
105	NA	2X6	2X6	2X5	2X5	2X4	2X4	2X3
115	NA	2X6	2X6	2X5	2X5	2X4	2X4	2X3
125	NA	2X6	2X6	2X5	2X5	2X4	2X4	2X3
135	NA	2X6	2X6	2X5	2X5	2X4	2X4	2X3
145	NA	2X6	2X6	2X5	2X5	2X4	2X4	2X3
155	NA	2X6	2X6	2X5	2X5	2X4	2X4	2X3
165	NA	2X6	2X6	2X5	2X5	2X4	2X4	2X3
175	NA	2X6	2X6	2X5	2X5	2X4	2X4	2X3
185	NA	2X6	2X6	2X5	2X5	2X4	2X4	2X3
195	NA	2X6	2X6	2X5	2X5	2X4	2X4	2X3
255	NA	2X6	2X6	2X5	2X5	2X4	2X4	2X3

MAXIMUM HEADER DEFLECTION 2 SPANS SHUTTER

	SHUTTER SPAN							
Pd	66	60	54	48	42	36	30	24
30	0.9	1.1	0.7	0.9	0.6	0.8	0.4	0.2
45	1.1	0.8	0.6	0.6	0.4	0.4	0.6	0.2
55	0.8	0.9	0.6	0.7	0.4	0.5	0.3	0.3
65	0.9	0.6	0.7	0.4	0.5	0.6	0.3	0.3
75	0.9	0.7	0.7	0.5	0.5	0.3	0.3	0.1
85	0.9	0.7	0.8	0.5	0.6	0.3	0.3	0.2
95	0.9	0.7	0.8	0.5	0.3	0.3	0.4	0.2
105	0.9	0.7	0.5	0.6	0.4	0.4	0.4	0.2
115	0.9	0.7	0.8	0.6	0.4	0.4	0.2	0.2
125	0.9	0.7	0.5	0.5	0.4	0.4	0.2	0.2
135	0.9	0.7	0.5	0.5	0.4	0.4	0.2	0.2
145	0.9	0.7	0.8	0.5	0.4	0.4	0.2	0.2
155	0.9	0.7	0.8	0.5	0.4	0.4	0.2	0.2
165	0.9	0.7	0.5	0.5	0.4	0.4	0.2	0.2
175	0.9	0.7	0.8	0.5	0.4	0.4	0.2	0.2
185	0.9	0.7	0.8	0.5	0.4	0.4	0.2	0.2
195	0.9	0.7	0.5	0.5	0.4	0.4	0.2	0.2
255	0.9	0.7	0.5	0.5	0.4	0.4	0.2	0.2

MAXIMUM HEADER DEFLECTION 3 SPANS SHUTTER

	SHUTTER SPAN							
Pd	66	60	54	48	42	36	30	24
30	NA	1.9	1.4	1.3	1.4	1.5	0.7	0.8
45	NA	1.9	1.4	1.6	1.1	1.1	1.1	0.4
55	NA	1.9	1.4	1.6	1.1	1.2	0.7	0.5
65	NA	1.9	1.4	1.6	1.1	1.2	0.7	0.6
75	NA	1.9	1.4	1.6	1.1	1.2	0.7	0.7
85	NA	1.9	1.4	1.6	1.1	1.2	0.7	0.7
95	NA	1.9	1.4	1.6	1.1	1.2	0.7	0.7
105	NA	1.9	1.4	1.6	1.1	1.1	0.7	0.7
115	NA	1.9	1.4	1.5	1.1	1.2	0.7	0.7
125	NA	1.9	1.4	1.5	1.0	1.2	0.7	0.7
135	NA	1.9	1.4	1.6	1.0	1.1	0.7	0.7
145	NA	1.9	1.4	1.6	1.0	1.2	0.7	0.7
155	NA	1.9	1.4	1.6	1.1	1.2	0.7	0.7
165	NA	1.9	1.4	1.5	1.0	1.2	0.7	0.7
175	NA	1.9	1.4	1.6	1.0	1.2	0.7	0.7
185	NA	1.9	1.4	1.5	1.1	1.1	0.7	0.7
195	NA	1.9	1.4	1.5	1.0	1.2	0.7	0.7
255	NA	1.9	1.3	1.5	1.1	1.2	0.7	0.7

DEFLECTION IN INCHES BASED ON HEADER SELECTION
Pd- DESIGNED PRESSURE IN PSF
SHUTTER SPAN IN INCHES

1/8 2X5 STORM BAR

HEADER SELECTION 2 SPANS SHUTTER

	SHUTTER SPAN							
Pd	66	60	54	48	42	36	30	24
30	2X5	2X4	2X4	2X3	2X3	2X2	2X2	2X2
45	2X6	2X5	2X5	2X4	2X4	2X3	2X2	2X2
55	2X6	2X6	2X5	2X5	2X4	2X3	2X3	2X2
65	2X6	2X6	2X6	2X5	2X4	2X4	2X3	2X2
75	2X6	2X6	2X6	2X5	2X5	2X4	2X3	2X3
85	2X6	2X6	2X6	2X5	2X5	2X4	2X4	2X3
95	2X6	2X6	2X5	2X5	2X5	2X4	2X4	2X3
105	2X6	2X6	2X6	2X5	2X5	2X4	2X4	2X3
115	2X6	2X6	2X5	2X5	2X5	2X4	2X4	2X3
125	2X6	2X6	2X6	2X5	2X5	2X4	2X4	2X3
135	2X6	2X6	2X6	2X5	2X5	2X4	2X4	2X3
145	2X6	2X6	2X5	2X5	2X5	2X4	2X4	2X3
155	2X6	2X6	2X5	2X5	2X5	2X4	2X4	2X3
165	2X6	2X6	2X6	2X5	2X5	2X4	2X4	2X3
175	2X6	2X6	2X5	2X5	2X5	2X4	2X4	2X3
185	2X6	2X6	2X5	2X5	2X5	2X4	2X4	2X3
195	2X6	2X6	2X6	2X5	2X5	2X4	2X4	2X3
255	2X6	2X6	2X6	2X5	2X5	2X4	2X4	2X3

HEADER SELECTION 3 SPANS SHUTTER

	SHUTTER SPAN							
Pd	66	60	54	48	42	36	30	24
30	NA	2X6	2X6	2X5	2X4	2X3	2X3	2X2
45	NA	2X6	2X6	2X5	2X5	2X4	2X3	2X3
55	NA	2X6	2X6	2X5	2X5	2X4	2X4	2X3
65	NA	2X6	2X6	2X5	2X5	2X4	2X4	2X3
75	NA	2X6	2X6	2X5	2X5	2X4	2X4	2X3
85	NA	2X6	2X6	2X5	2X5	2X4	2X4	2X3
95	NA	2X6	2X6	2X5	2X5	2X4	2X4	2X3
105	NA	2X6	2X6	2X5	2X5	2X4	2X4	2X3
115	NA	2X6	2X6	2X5	2X5	2X4	2X4	2X3
125	NA	2X6	2X6	2X5	2X5	2X4	2X4	2X3
135	NA	2X6	2X6	2X5	2X5	2X4	2X4	2X3
145	NA	2X6	2X6	2X5	2X5	2X4	2X4	2X3
155	NA	2X6	2X6	2X5	2X5	2X4	2X4	2X3
165	NA	2X6	2X6	2X5	2X5	2X4	2X4	2X3
175	NA	2X6	2X6	2X5	2X5	2X4	2X4	2X3
185	NA	2X6	2X6	2X5	2X5	2X4	2X4	2X3
195	NA	2X6	2X6	2X5	2X5	2X4	2X4	2X3
255	NA	2X6	2X6	2X5	2X5	2X4	2X4	2X3

MAXIMUM HEADER DEFLECTION 2 SPANS SHUTTER

	SHUTTER SPAN							
Pd	66	60	54	48	42	36	30	24
30	1.0	1.1	0.7	0.9	0.6	0.8	0.4	0.2
45	0.8	0.9	0.6	0.7	0.4	0.4	0.6	0.2
55	0.9	0.7	0.7	0.5	0.5	0.5	0.3	0.3
65	0.9	0.7	0.5	0.5	0.6	0.3	0.3	0.3
75	0.9	0.7	0.5	0.5	0.4	0.4	0.4	0.1
85	0.9	0.7	0.5	0.5	0.4	0.4	0.2	0.2
95	0.9	0.7	0.8	0.5	0.4	0.4	0.2	0.2
105	0.9	0.7	0.5	0.6	0.4	0.4	0.2	0.2
115	0.9	0.7	0.8	0.6	0.4	0.4	0.2	0.2
125	0.9	0.7	0.5	0.5	0.4	0.4	0.2	0.2
135	0.9	0.7	0.5	0.5	0.4	0.4	0.2	0.2
145	0.9	0.7	0.8	0.5	0.4	0.4	0.2	0.2
155	0.9	0.7	0.8	0.5	0.4	0.4	0.2	0.2
165	0.9	0.7	0.5	0.5	0.4	0.4	0.2	0.2
175	0.9	0.7	0.8	0.5	0.4	0.4	0.2	0.2
185	0.9	0.7	0.8	0.5	0.4	0.4	0.2	0.2
195	0.9	0.7	0.5	0.5	0.4	0.4	0.2	0.2
255	0.9	0.7	0.5	0.5	0.4	0.4	0.2	0.2

MAXIMUM HEADER DEFLECTION 3 SPANS SHUTTER

	SHUTTER SPAN							
Pd	66	60	54	48	42	36	30	24
30	NA	1.9	1.4	1.3	1.4	1.5	0.7	0.8
45	NA	1.9	1.4	1.6	1.1	1.1	1.1	0.4
55	NA	1.9	1.4	1.6	1.1	1.2	0.7	0.5
65	NA	1.9	1.4	1.6	1.1	1.2	0.7	0.6
75	NA	1.9	1.4	1.6	1.1	1.2	0.7	0.7
85	NA	1.9	1.4	1.6	1.1	1.2	0.7	0.7
95	NA	1.9	1.4	1.6	1.1	1.2	0.7	0.7
105	NA	1.9	1.4	1.6	1.1	1.1	0.7	0.7
115	NA	1.9	1.4	1.5	1.1	1.2	0.7	0.7
125	NA	1.9	1.4	1.5	1.0	1.2	0.7	0.7
135	NA	1.9	1.4	1.6	1.0	1.1	0.7	0.7
145	NA	1.9	1.4	1.6	1.0	1.2	0.7	0.7
155	NA	1.9	1.4	1.6	1.1	1.2	0.7	0.7
165	NA	1.9	1.4	1.5	1.0	1.2	0.7	0.7
175	NA	1.9	1.4	1.6	1.0	1.2	0.7	0.7
185	NA	1.9	1.4	1.5	1.1	1.1	0.7	0.7
195	NA	1.9	1.4	1.5	1.0	1.2	0.7	0.7
255	NA	1.9	1.3	1.5	1.1	1.2	0.7	0.7

DEFLECTION IN INCHES BASED ON HEADER SELECTION
Pd- DESIGNED PRESSURE IN PSF
SHUTTER SPAN IN INCHES

NOTE: HEADER SELECTION AND DEFLECTION ARE CONTROLLED BY THE MAXIMUM ALLOWABLE STORM BARS HEIGHT TABLES ON SHEETS 5 AND 6 OF 14

Manufacturer:
Atlantic Shutter Systems, Inc.
1513 ABSCO DRIVE
LITTLE RIVER, SC 29566
Tel.: (843) 399-6000

Product:
RE1000
EXTRUDED ALUMINUM ROLL SHUTTERS

Engineering:
EngCo Inc.
CA 8116
6971 W. Sunrise Blvd. 104
Plantation, Fl. 33313
Tel.: (954) 585-0304

SEP 20 2001

Engineer Seal
Pedro De Figueiredo
PE 52609

Date: 8/5/01
Scale: NA
Design by: PPMF

Dade County NOA:
APPROVED AS COMPLYING WITH THE SOUTH FLORIDA BUILDING CODE
DATE OCT 18 2001
BY
PRODUCT CONTROL DIVISION
BUILDING CODE COMPLIANCE OFFICE
ACCEPTANCE NO. 01-0924.05

Drawing Number
01-061R

ANCHOR SCHEDULE

Type	Description	Embed.	Substract	Manufacturer
A	1/4" Tapcon	1 3/4"	Concrete	Elco
B	1/4" Tapcon	1 1/4"	Hollow Block	Elco
C	#14 SS Wood Screws	1 1/2"	Wood (SG=.55)	Elco

EDGE DISTANCE =3"

ANCHORAGE NOTE: HEADER ANCHORAGE IS CONTROLLED BY THE MAXIMUM ALLOWABLE STORM BARS HEIGHT TABLES ON SHEETS 5 AND 6 OF 14

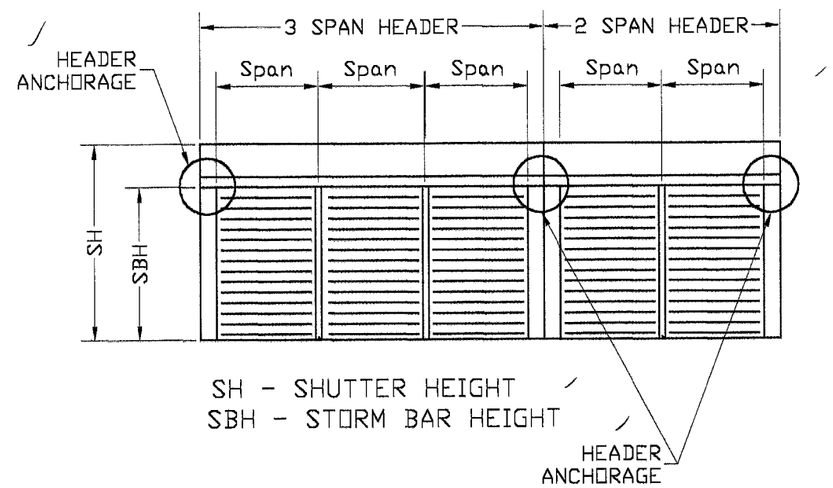

HEADER ANCHORAGE INTO MULLION TUBE

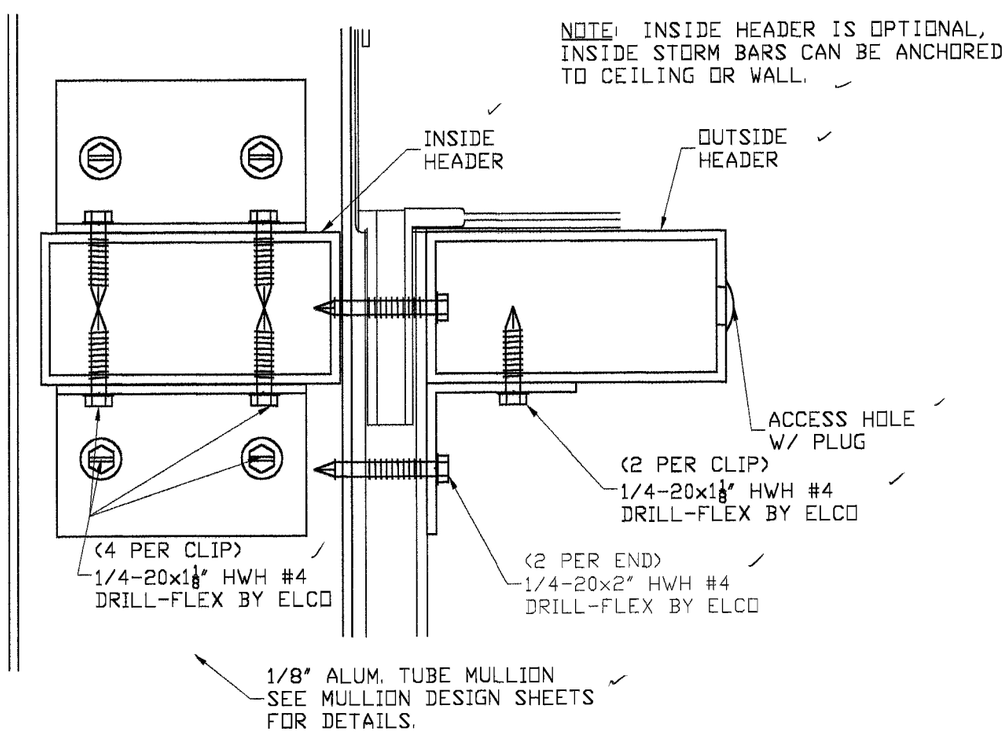

HEADER ANCHORAGE INTO BUILT-OUT ALUM. TUBE

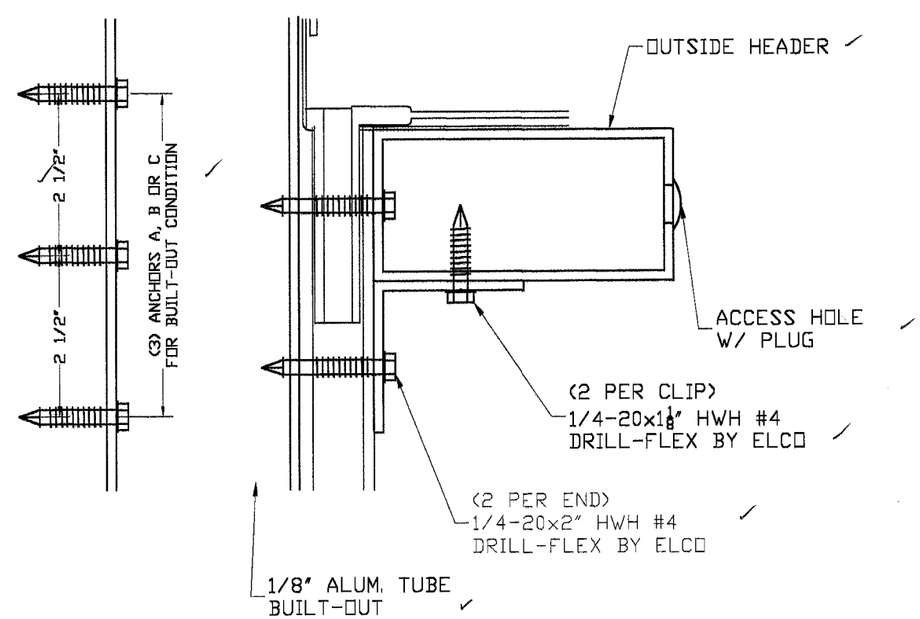

Manufacturer:
Atlantic Shutter Systems, Inc.
1513 ABSCO DRIVE
LITTLE RIVER, SC 29566
Tel.: (843) 399-6000

Product:
RE1000
EXTRUDED ALUMINUM ROLL SHUTTERS

Engineering:
EngCo Inc.
CA 8116
6971 W. Sunrise Blvd. 104
Plantation, Fl. 33313
Tel.: (954) 585-0304

SEP 2 0 2001

Engineer Seal
Pedro De Figueiredo
PE 52609

Date: 8/5/01
Scale: NA
Design by: PPMF

Dade County NOA:
APPROVED AS COMPLYING WITH THE SOUTH FLORIDA BUILDING CODE
DATE OCT 1 8 2001
BY
PRODUCT CONTROL DIVISION
BUILDING CODE COMPLIANCE OFFICE
ACCEPTANCE NO. 01-0929.05

Drawing Number
01-061R

MULLION SELECTION TABLES

CASE 1 - MULLION ANCHORED WALL TO WALL OR WALL TO FLOOR

INTERMEDIATE MULLION

	MULLION SPAN							
Pd	120	108	96	84	72	60	48	36
30	2X6	2X5	2X4	2X4	2X3	2X3	2X2	2X2
45	2X6	2X6	2X5	2X4	2X4	2X3	2X2	2X2
55	NA	2X6	2X5	2X5	2X4	2X3	2X3	2X2
65	NA	2X6	2X5	2X5	2X4	2X3	2X3	2X2
75	NA	2X6	2X6	2X5	2X4	2X3	2X3	2X2
85	NA	2X6	2X6	2X5	2X4	2X3	2X3	2X2
95	NA	NA	2X6	2X5	2X4	2X4	2X3	2X2
105	NA	NA	2X6	2X5	2X4	2X4	2X3	2X2
115	NA	NA	2X6	2X5	2X5	2X4	2X3	2X2
125	NA	NA	2X6	2X5	2X5	2X4	2X3	2X2
135	NA	NA	2X6	2X6	2X5	2X4	2X3	2X2
145	NA	NA	NA	2X6	2X5	2X4	2X3	2X2
155	NA	NA	NA	2X6	2X5	2X4	2X3	2X2
165	NA	NA	NA	2X6	2X5	2X4	2X3	2X2
175	NA	NA	NA	2X6	2X5	2X4	2X3	2X2
185	NA	NA	NA	2X6	2X5	2X4	2X3	2X2
195	NA	NA	NA	2X6	2X5	2X4	2X3	2X2
255	NA	NA	NA	2X6	2X5	2X4	2X4	2X3

END MULLION

	MULLION SPAN							
Pd	120	108	96	84	72	60	48	36
30	2X4	2X4	2X3	2X3	2X3	2X2	2X2	2X2
45	2X5	2X4	2X4	2X3	2X3	2X2	2X2	2X2
55	2X5	2X5	2X4	2X4	2X3	2X3	2X2	2X2
65	2X5	2X5	2X4	2X4	2X3	2X3	2X2	2X2
75	2X6	2X5	2X4	2X4	2X3	2X3	2X2	2X2
85	2X6	2X5	2X4	2X4	2X3	2X3	2X2	2X2
95	2X6	2X5	2X5	2X4	2X3	2X3	2X2	2X2
105	2X6	2X5	2X5	2X4	2X4	2X3	2X2	2X2
115	2X6	2X6	2X5	2X4	2X4	2X3	2X2	2X2
125	2X6	2X6	2X5	2X4	2X4	2X3	2X2	2X2
135	2X6	2X6	2X5	2X4	2X4	2X3	2X2	2X2
145	2X6	2X6	2X5	2X4	2X4	2X3	2X2	2X2
155	NA	2X6	2X5	2X4	2X4	2X3	2X2	2X2
165	NA	2X6	2X5	2X5	2X4	2X3	2X3	2X2
175	NA	2X6	2X5	2X5	2X4	2X3	2X3	2X2
185	NA	2X6	2X5	2X5	2X4	2X3	2X3	2X2
195	NA	2X6	2X5	2X5	2X4	2X3	2X3	2X2
255	NA	NA	2X6	2X5	2X4	2X3	2X3	2X2

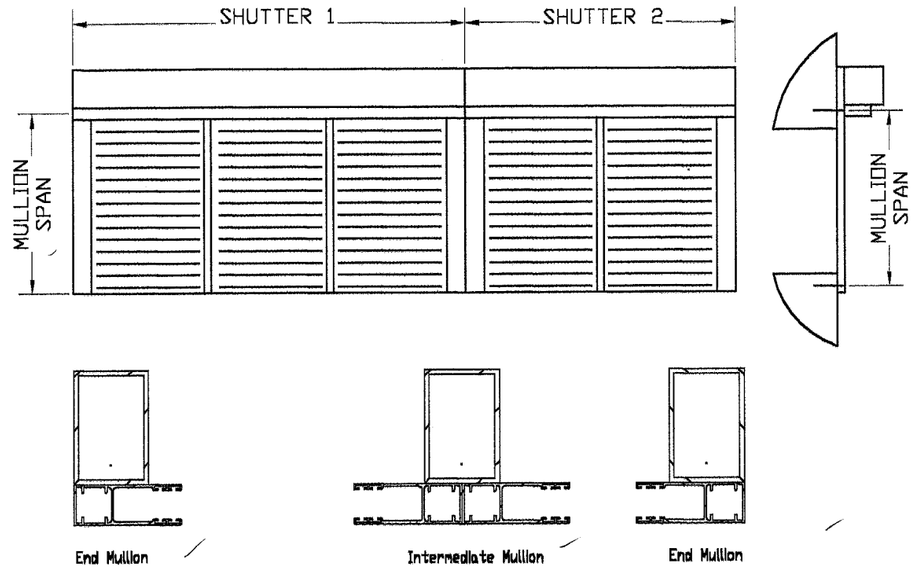

NOTE: MULLION TABLES ARE CONTROLLED BY THE SPAN VS PRESSURE TABLES ON SHEET 3 OF 14

CASE 2 - MULLION ANCHORED FLOOR TO CEILING

INTERMEDIATE MULLION

	MULLION SPAN							
Pd	120	108	96	84	72	60	48	36
30	2X6	2X5	2X5	2X4	2X4	2X3	2X3	2X2
45	NA	2X6	2X5	2X5	2X4	2X3	2X3	2X2
55	NA	2X6	2X5	2X5	2X4	2X4	2X3	2X2
65	NA	2X6	2X6	2X5	2X4	2X4	2X3	2X2
75	NA	NA	2X6	2X5	2X4	2X4	2X3	2X2
85	NA	NA	2X6	2X5	2X4	2X4	2X3	2X2
95	NA	NA	2X6	2X5	2X5	2X4	2X3	2X2
105	NA	NA	2X6	2X6	2X5	2X4	2X3	2X3
115	NA	NA	2X6	2X6	2X5	2X4	2X3	2X3
125	NA	NA	2X6	2X6	2X5	2X4	2X3	2X3
135	NA	NA	NA	2X6	2X5	2X4	2X3	2X3
145	NA	NA	NA	2X6	2X5	2X4	2X3	2X3
155	NA	NA	NA	2X6	2X5	2X4	2X3	2X3
165	NA	NA	NA	2X6	2X5	2X4	2X3	2X3
175	NA	NA	NA	2X6	2X5	2X4	2X4	2X3
185	NA	NA	NA	2X6	2X5	2X4	2X4	2X3
195	NA	NA	NA	2X6	2X5	2X4	2X4	2X3
255	NA	NA	NA	NA	2X6	2X5	2X4	2X3

END MULLION

	MULLION SPAN							
Pd	120	108	96	84	72	60	48	36
30	2X5	2X4	2X4	2X4	2X3	2X3	2X2	2X2
45	2X5	2X5	2X4	2X4	2X3	2X3	2X3	2X2
55	2X6	2X5	2X4	2X4	2X3	2X3	2X3	2X2
65	2X6	2X5	2X5	2X4	2X4	2X3	2X3	2X2
75	2X6	2X5	2X5	2X4	2X4	2X3	2X3	2X2
85	2X6	2X5	2X5	2X4	2X4	2X3	2X3	2X2
95	2X6	2X5	2X5	2X4	2X4	2X3	2X3	2X2
105	2X6	2X6	2X5	2X4	2X4	2X3	2X3	2X2
115	2X6	2X6	2X5	2X5	2X4	2X3	2X3	2X2
125	2X6	2X6	2X5	2X5	2X4	2X3	2X3	2X2
135	NA	2X6	2X5	2X5	2X4	2X3	2X3	2X2
145	NA	2X6	2X5	2X5	2X4	2X3	2X3	2X2
155	NA	2X6	2X5	2X5	2X4	2X3	2X3	2X2
165	NA	2X6	2X5	2X5	2X4	2X4	2X3	2X2
175	NA	2X6	2X6	2X5	2X4	2X4	2X3	2X2
185	NA	2X6	2X6	2X5	2X4	2X4	2X3	2X2
195	NA	2X6	2X6	2X5	2X4	2X4	2X3	2X2
255	NA	NA	2X6	2X5	2X5	2X4	2X3	2X2

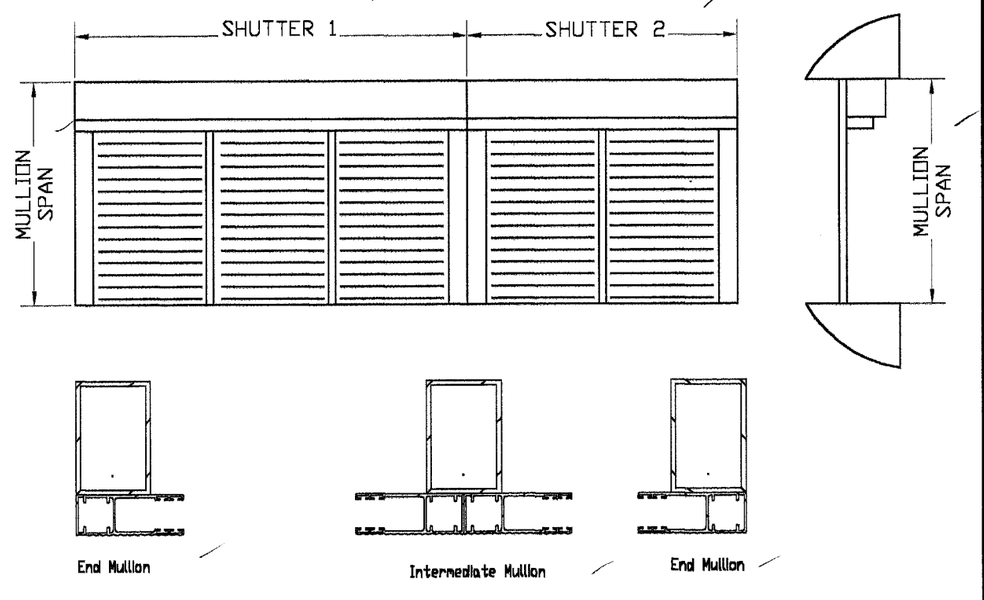

Manufacturer:
Atlantic Shutter Systems, Inc.
1513 ABSCO DRIVE
LITTLE RIVER, SC 29566
Tel.: (843) 399-6000

Product:
RE1000
EXTRUDED ALUMINUM ROLL SHUTTERS

Engineering:
EngCo Inc.
CA 8116
6971 W. Sunrise Blvd. 104
Plantation, Fl. 33313
Tel.: (954) 585-0304

SEP 2 0 2001
Engineer Seal
Pedro De Figueiredo
PE 52609

Date: 8/5/01
Scale: NA
Design by: PPMF

Dade County NOA:
APPROVED AS COMPLYING WITH THE SOUTH FLORIDA BUILDING CODE
DATE OCT 1 8 2001
BY
PRODUCT CONTROL DIVISION
BUILDING CODE COMPLIANCE OFFICE
ACCEPTANCE NO. 01-0424.05

Drawing Number
01-061R

MULLION ANCHORAGE TABLES
ALLOWABLE DESIGN LOAD - Pd (Psf)

TABLE 1
Mullion Anchored to Clip

Allowable Loads PSF

	# OF ANCHORS D	
AREA	2	3
10	145	195
15	95	145
20	75	105
25	55	85
30	45	75
35	30	55
40	30	55
45	30	45

NOTES:
1- END MULLION: USE ONE CLIP WITH 2 OR 3 ANCHORS TYPE D.
2- INTERMEDIATE MULLION: USE TWO CLIPS WITH 4 OR 6 ANCHORS TYPE D.
3- AREA: SEE FIGURE 1 TO CALCULATE AREA

FIGURE 1
Area Calculation

AREA = Ms X SPAN (SQF)
Ms= MULLION SPAN (Ft)
SPAN= SHUTTER SPAN (Ft)
AREA END MULLION 1 = Ms X SPAN 1
AREA END MULLION 2 = Ms X SPAN 2
AREA INTERM. MULL 3 = Ms X SPAN (SPAN=GREATER OF SPAN 1 AND 2)

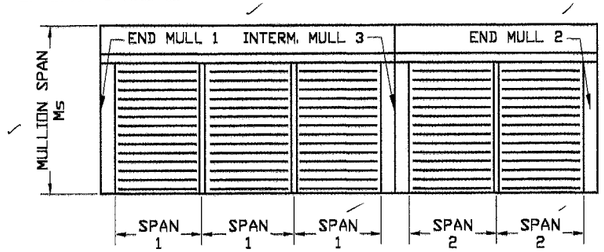

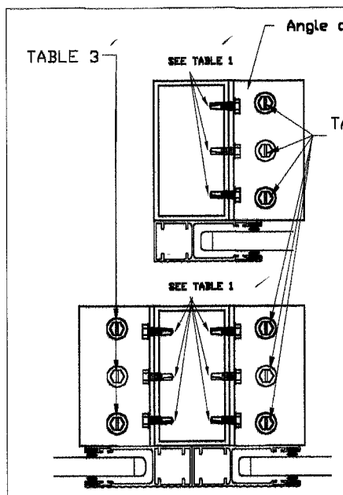

TABLE 3
Mullion Anchored to Floor/Ceiling

Allowable Loads PSF

	ANCHOR TYPE A				
AREA	2	3	4	5	6
10	30	65	85	115	155
15	NA	45	55	75	105
20	NA	30	45	55	75
25	NA	NA	30	45	55
30	NA	NA	30	30	45
35	NA	NA	NA	30	45
40	NA	NA	NA	NA	30
45	NA	NA	NA	NA	30

NOTES:
1- USE 2 ANCHORS FOR 2"/3"/4" CLIPS
2- USE 3 ANCHORS FOR 5"/6" CLIPS
3- END MULLION: USE ONE CLIP
4- INTERMEDIATE MULLIONS: USE TWO CLIPS
5- AREA: SEE FIGURE 1 TO CALCULATE AREA

TABLE 5 - WALL MOUNT
Mullion Anchored to Wall

Allowable Loads PSF

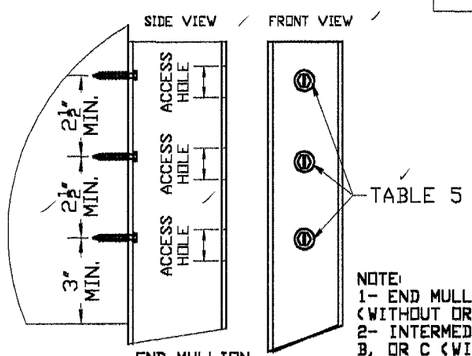

END MULLION
WALL MOUNT (W/OUT CLIP)

	3 ANCHORS		
AREA	A	B	C
10	255	115	255
15	165	75	175
20	125	55	125
25	95	45	105
30	85	30	85
35	75	30	75
40	55	NA	65
45	55	NA	55

NOTE:
1- END MULLIONS - 3 ANCHORS TYPE A, B OR C (WITHOUT OR WITH 1 CLIP)
2- INTERMEDIATE MULLIONS - 6 ANCHORS TYPE A, B, OR C (WITH 2 CLIPS)
3- AREA: SEE FIGURE 1 TO CALCULATE AREA

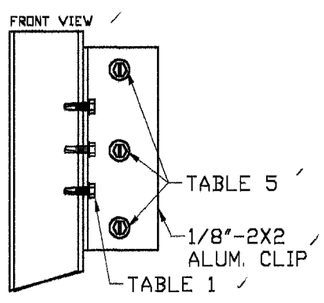

END MULLION
WALL MOUNT (W/ CLIP)

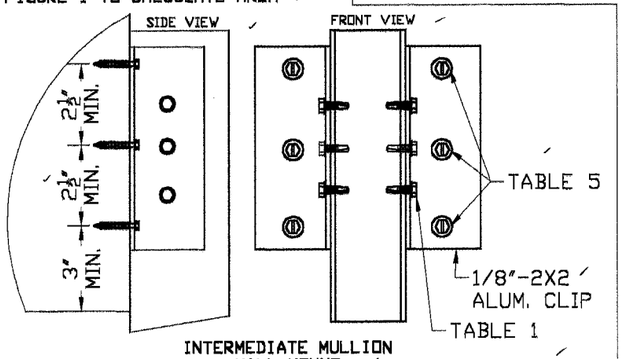

INTERMEDIATE MULLION
WALL MOUNT

TABLE 2
ANGLE OR TUBE - BUILT-OUT MOUNT

Allowable Loads PSF

	ANCHORS	
AREA	A/C	B
10	125	75
15	85	45
20	55	30
25	45	30
30	30	NA
35	30	NA
40	30	NA

NOTES:
1- CONCRETE/WOOD WALLS (ANCHOR TYPE A OR C)
END MULL: USE 3 ANCHORS
INTERM. MULLIONS: USE 6 ANCHORS
2- HOLLOW BLOCK WALLS (ANCHOR TYPE B)
END MULL: USE 4 ANCHORS
INTERM. MULLIONS: USE 8 ANCHORS
3- AREA: SEE FIGURE 1 TO CALCULATE AREA

TABLE 4
Mullion Anchored to Built Out

Allowable Loads PSF

	#10-16x3/4" Drill-Flex Anchor				
AREA	2	3	4	5	6
10	30	45	65	85	95
15	NA	30	45	55	65
20	NA	NA	30	30	45
25	NA	NA	NA	30	30
30	NA	NA	NA	NA	30

NOTES:
1- USE 2 ANCHORS FOR 2" or 3" CLIPS
2- USE 3 ANCHORS FOR 4", 5" or 6" CLIPS
3- END MULLION: USE ONE CLIP
4- INTERMEDIATE MULLIONS: USE TWO CLIPS
5- AREA: SEE FIGURE 1 TO CALCULATE AREA

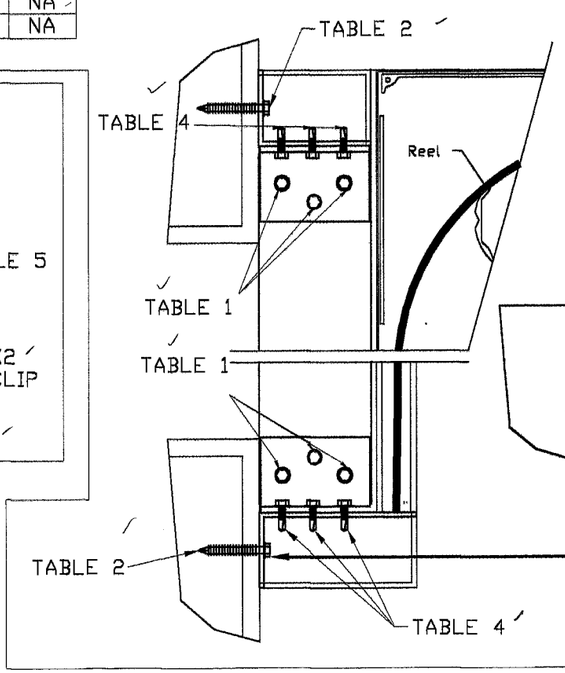

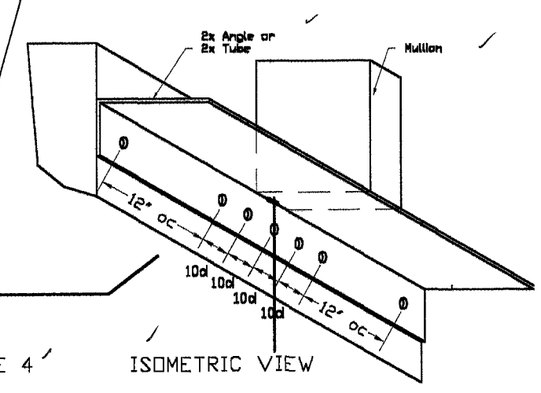

ISOMETRIC VIEW

ANCHOR SCHEDULE

Type	Description	Embed.	Substract	Manufacturer
A	1/4" Tapcon	1 3/4"	Concrete	Elco
B	1/4" Tapcon	1 1/4"	Hollow Block	Elco
C	#14 SS Wood Screws	1 1/2"	Wood (SG=.55)	Elco
D	#10-16x3/4" Drill-Flex	1/8	Aluminum	Elco

EDGE DISTANCE =3"

Manufacturer:
Atlantic Shutter Systems, Inc.
1513 ABSCO DRIVE
LITTLE RIVER, SC 29566
Tel.: (843) 399-6000

Product:
RE1000
EXTRUDED ALUMINUM ROLL SHUTTERS

Engineering:
EngCo Inc.
CA 8116
6971 W. Sunrise Blvd. 104
Plantation, Fl. 33313
Tel.: (954) 585-0304

SEP 2 0 2001

Engineer Seal
Pedro De Figueiredo
PE 52609

Date: 8/5/01
Scale: NA
Design by: PPMF

Dade County NOA:
APPROVED AS COMPLYING WITH THE SOUTH FLORIDA BUILDING CODE
DATE OCT 1 8 2001
BY
PRODUCT CONTROL DIVISION
BUILDING CODE COMPLIANCE OFFICE
ACCEPTANCE NO. 01-0924.05

Drawing Number
01-061R

HOOD ASSEMBLY

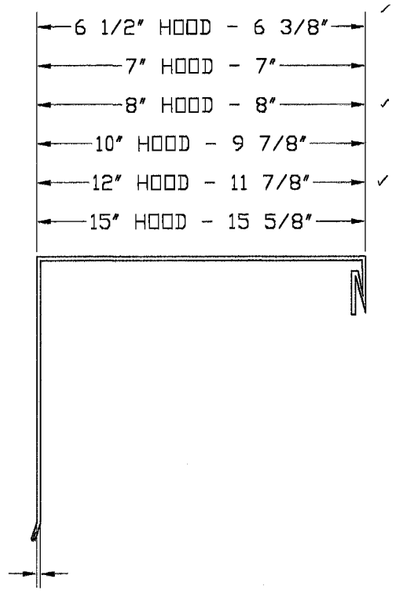

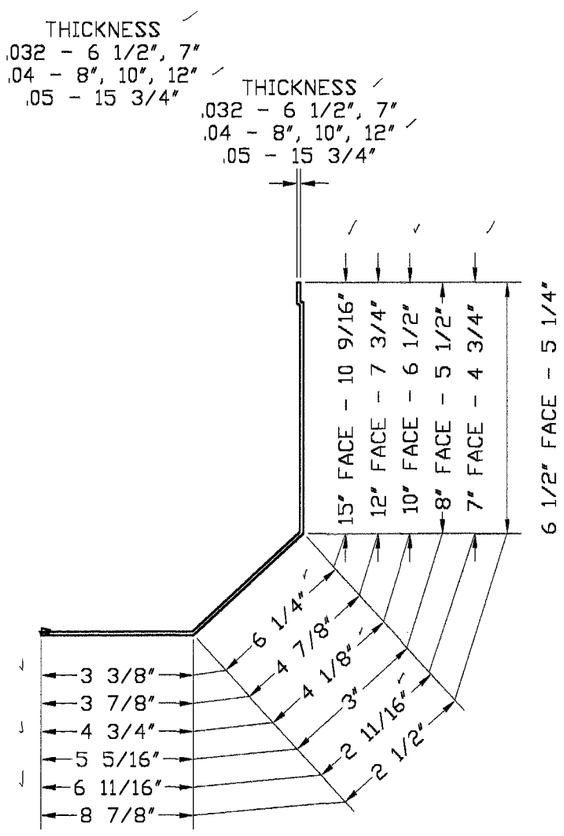

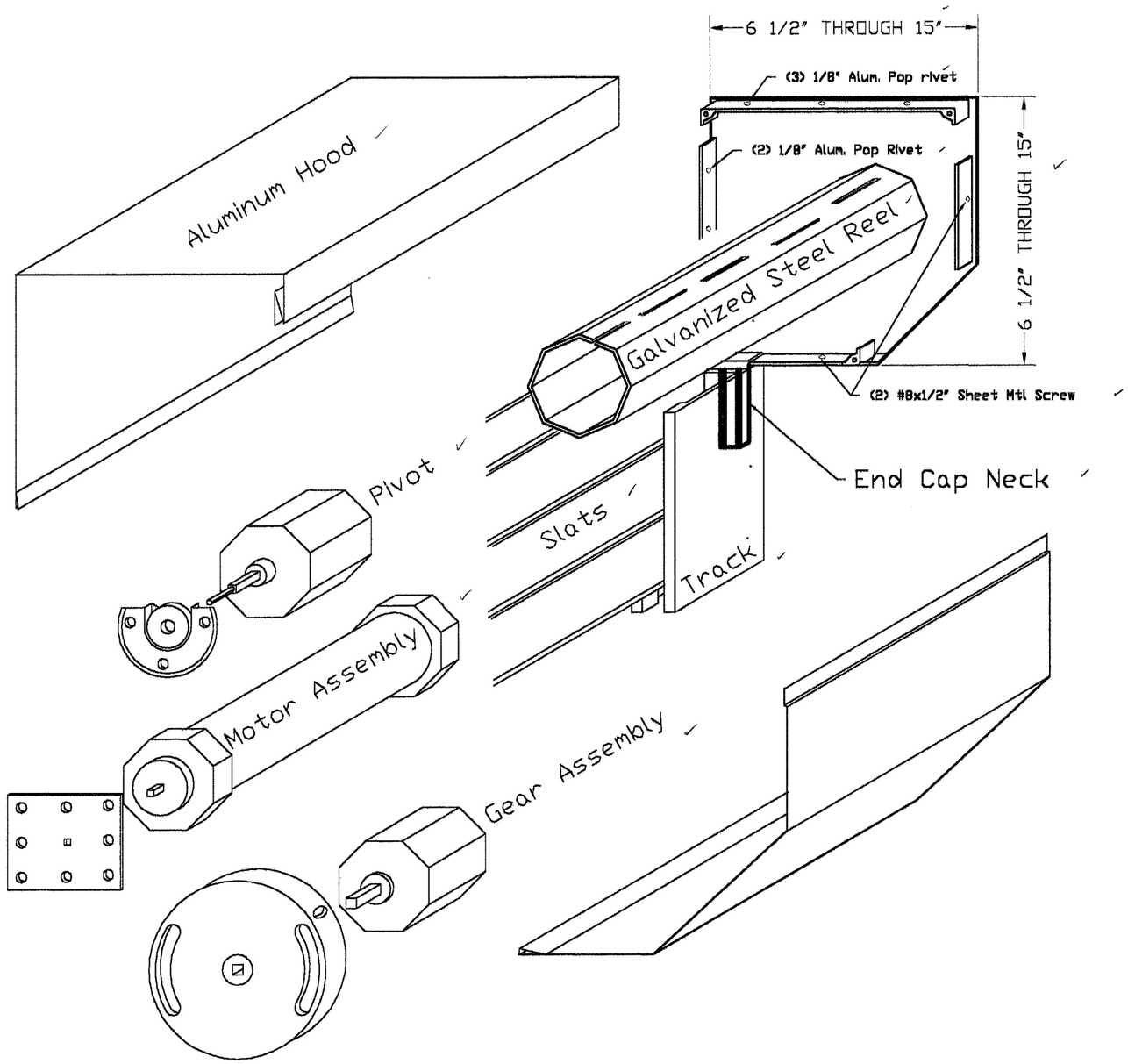

Manufacturer:
Atlantic Shutter Systems, Inc.
1513 ABSCO DRIVE
LITTLE RIVER, SC 29566
Tel.: (843) 399-6000

Product:
RE1000
EXTRUDED ALUMINUM ROLL SHUTTERS

Engineering:
EngCo Inc.
CA 8116
6971 W. Sunrise Blvd. 104
Plantation, Fl. 33313
Tel.: (954) 585-0304

SEP 2 0 2001

Engineer Seal
Pedro De Figueiredo
PE 52609

Date: 8/5/01
Scale: NA
Design by: PPMF

Dade County NOA:
APPROVED AS COMPLYING WITH THE
SOUTH FLORIDA BUILDING CODE
DATE OCT 1 8 2001
BY
PRODUCT CONTROL DIVISION
BUILDING CODE COMPLIANCE OFFICE
ACCEPTANCE NO. 01-0929.05

Drawing Number
01-061R

Sheet
13 of 14

MULTIPLE SPAN SHUTTER SLAT TOTAL DEFLECTION

POSITIVE LOAD

UNIT #	(1) Pd	(2) TT	(3) # SPANS	(4) Span	(5) SLAT DEF(A).	(6) STORM BARS TYPE	(6) STORM BARS SPAN	(6) STORM BARS DEF. (B)	(7) HEADER TYPE	(7) HEADER DEF. (C)	(8) TOTAL DEF. (D) D=A+B/2+C/4	(9) Allowable D<=Span/30 or 2"	(10) GS GS=D+1
1													
2													
3													
4													
5													
6													

NEGATIVE LOAD

UNIT #	(1) Pd	(2) TT	(3) # SPANS	(4) Span	(5) SLAT DEF(A).	(6) STORM BARS TYPE	(6) STORM BARS SPAN	(6) STORM BARS DEF. (B)	(7) HEADER TYPE	(7) HEADER DEF. (C)	(8) TOTAL DEF. (D) D=A+B/2+C/4	(9) Allowable D<=Span/30
1												
2												
3												
4												
5												
6												

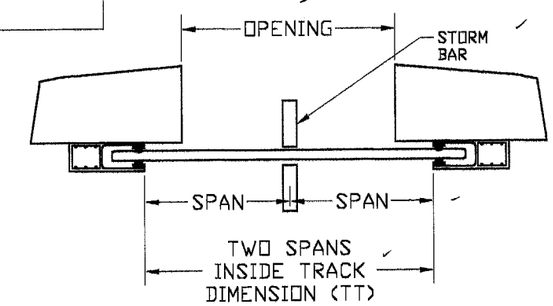

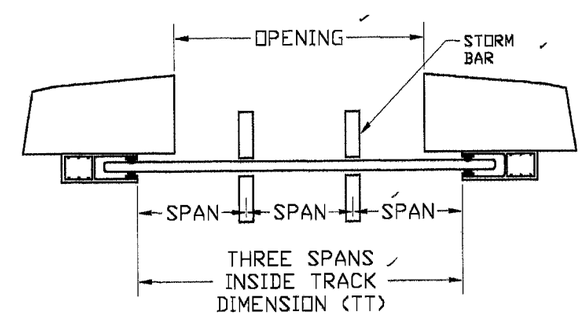

PROCEDURE:
STEP 1: PROVIDE PROJECT DESIGNED PRESSURE IN PSF AS PER ITEM 4 SHEET 1 OF 14, BASED ON ASCE 7-88
STEP 2: PROVIDE TRACK TO TRACK SHUTTER DIMENSION IN INCHES.
STEP 3: PROVIDE NUMBER OF SPANS: 2 FOR ONE SET OF STORM BARS 3 FOR TWO SETS.
STEP 4: CALCULATE THE SPAN SIZE DIVIDING TT/# OF SPANS. THIS VALUE MUST BE LESS OR EQUAL THE CORRESPONDING VALUE OF TABLE 1, 3 ON SHEET 3 OF 14.
STEP 5: CALCULATED SLAT DEFLECTION IN INCHES AS PER TABLE 2, 3 OR 3, 3.
STEP 6: SELECT APPROPRIATE STORM BAR TYPE AND CORRESPONDING DEFLECTION ON SHEETS 5 OR 6 OF 14.
STEP 7: (IF APPLICABLE) SELECT APPROPRIATE HEADER TYPE AND CORRESPONDING DEFLECTION ON SHEETS 8 OR 9 OF 14.
STEP 8: CALCULATE TOTAL DEFLECTION
STEP 9: CALCULATE AND COMPARE MAXIMUM ALLOWABLE DEFLECTION. IF TOTAL DEFLECTION EXCEEDS THE ALLOWABLE TRY TO UPGRADE THE STORM BAR UNTIL DESIGN IS ACCEPTABLE.
STEP 10: CALCULATE THE SLAT TO GLASS SEPARATION (POSITIVE ONLY). COMPARE WITH GLASS SEPARATION TABLE.
NOTE: USE ADDITIONAL SHEETS IF PROJECT HAVE MORE THAN 6 SHUTTERS.

(GS) GLASS SEPARATION:	
LARGE MISSILE IMPACT	WIND LOAD ONLY
4 7/8" -48" <=SPAN<=66 5/8" 4" -30" <SPAN<48" 3 1/2" -SPAN<=30"	3" ALL CONDITIONS

GLASS SEPARATION FOR LARGE MISSILE IMPACT IS APPLICABLE FOR INSTALLATION UP TO 30 FT. OF GRADE DUE TO LARGE MISSILE IMPACT. WIND LOAD GLASS SEPARATION APPLIES TO INSTALLATION ABOVE 30 FT. OF GRADE.

Manufacturer:
Atlantic Shutter Systems, Inc.
1513 ABSCO DRIVE
LITTLE RIVER, SC 29566
Tel.: (843) 399-6000

Product:
RE1000
EXTRUDED ALUMINUM ROLL SHUTTERS

Engineering:
EngCo Inc.
CA 8116
6971 W. Sunrise Blvd. 104
Plantation, Fl. 33313
Tel.: (954) 585-0304

SEP 2 0 2001
Engineer Seal
Pedro De Figueiredo
PE 52609

Date: 8/5/01
Scale: 1:1
Design by: PPMF

Dade County NOA:
APPROVED AS COMPLYING WITH THE SOUTH FLORIDA BUILDING CODE
DATE OCT 1 8 2001
BY
PRODUCT CONTROL DIVISION
BUILDING CODE COMPLIANCE OFFICE
ACCEPTANCE NO. 01-0929.05

Drawing Number
01-061R