MIAMI-DADE COUNTY, FLORIDA
METRO-DADE FLAGLER BUILDING

**BUILDING CODE COMPLIANCE OFFICE**
METRO-DADE FLAGLER BUILDING
140 WEST FLAGLER STREET, SUITE 1603
MIAMI, FLORIDA 33130-1563
(305) 375-2901 FAX (305) 375-2908

**CONTRACTOR LICENSING SECTION**
(305) 375-2527 FAX (305) 375-2558

**CONTRACTOR ENFORCEMENT DIVISION**
(305) 375-2966 FAX (305) 375-2908

**PRODUCT CONTROL DIVISION**
(305) 375-2902 FAX (305) 372-6339

# PRODUCT CONTROL NOTICE OF ACCEPTANCE

**Protective Shutter Systems, Inc.**
**1631 S. Dixie Hwy. Bldg. E-3**
**Pompano Beach ,FL 33060**

Your application for Notice of Acceptance (NOA) of:
**ASSA / "Big Bertha Hi-Rise" Aluminum Accordion Shutter**
under Chapter 8 of the Code of Miami-Dade County governing the use of Alternate Materials and Types of Construction, and completely described herein, has been recommended for acceptance by the Miami-Dade County Building Code Compliance Office (BCCO) under the conditions specified herein.

This NOA shall not be valid after the expiration date stated below. BCCO reserves the right to secure this product or material at any time from a jobsite or manufacturer's plant for quality control testing. If this product or material fails to perform in the approved manner, BCCO may revoke, modify, or suspend the use of such product or material immediately. BCCO reserves the right to revoke this approval, if it is determined by BCCO that this product or material fails to meet the requirements of the South Florida Building Code.

The expense of such testing will be incurred by the manufacturer.

**ACCEPTANCE NO.: 01-0430.03**
**EXPIRES: 05/30/2006**

Raul Rodriguez
Chief Product Control Division

**THIS IS THE COVERSHEET, SEE ADDITIONAL PAGES FOR SPECIFIC AND GENERAL CONDITIONS**
**BUILDING CODE & PRODUCT REVIEW COMMITTEE**

This application for Product Approval has been reviewed by the BCCO and approved by the Building Code and Product Review Committee to be used in Miami-Dade County, Florida under the conditions set forth above.

Francisco J. Quintana, R.A.
Director
Miami-Dade County
Building Code Compliance Office

**APPROVED: 05/30/2001**

**Protective Shutter Systems, Inc.**

**ACCEPTANCE No. : 01-0430.03**

**APPROVED : 05/30/2001**

**EXPIRES : 05/30/2006**

## NOTICE OF ACCEPTANCE: SPECIFIC CONDITIONS

**1. SCOPE**

This approves an aluminum accordion type shutter, as described in Section 2 of this Notice of Acceptance, designed to comply with the South Florida Building Code, 1994 Edition for Miami-Dade County, for the locations where the pressure requirements, as determined by SFBC Chapter 23, do not exceed the Design Pressure Rating values indicated in the approved drawings.

**2. PRODUCT DESCRIPTION**

This aluminum accordion type shutter and its components shall be constructed in strict compliance with the following documents: Drawing No. 01-041, titled "ASSA / Big Bertha Hi-Rise Accordion Shutter", prepared by Tilteco Inc., dated February 27, 2001, sheets 1 through 10 of 10, signed and sealed by Walter A. Tillit Jr., P.E., bearing the Miami-Dade County Product Control Approval stamp with the Notice of Acceptance number and approval date by the Miami-Dade County Product Control Division. These documents shall hereinafter be referred to as the approved drawings.

**3. LIMITATIONS**

All permanent set components, included but not limited to embedded anchor bolts, threaded cones, metal shields, headers and sills, must be protected against corrosion, contamination and damage at all times.

**4. INSTALLATION**

This aluminum accordion type shutter and its components shall be installed in strict compliance with the approved drawings.

**5. LABELING**

Each unit shall bear a permanent label with the manufacturer's name or logo, city, state and the following statement: "Miami-Dade County Product Control Approved".

**6. BUILDING PERMIT REQUIREMENTS**

**6.1** Application for building permit shall be accompanied by copies of the following:

- **6.1.1** This Notice of Acceptance.
- **6.1.2** Duplicate copies of the approved drawings, as identified in Section 2 of this Notice of Acceptance, clearly marked to show the components selected for the proposed installation.
- **6.1.3** Any other documents required by the Building Official or the South Florida Building Code (SFBC) in order to properly evaluate the installation of this system.

Helmy A. Makar, P.E.- Product Control Examiner
Product Control Division

**Protective Shutter Systems, Inc.**

**ACCEPTANCE No. : 01-0430.03**

**APPROVED : 05/30/2001**

**EXPIRES : 05/30/2006**

## NOTICE OF ACCEPTANCE: STANDARD CONDITIONS

1 Renewal of this Acceptance (approval) shall be considered after a renewal application has been filed and the original submitted documents, including test-supporting data, engineering documents, are no older than eight (8) years.

2. Any and all approved products shall be permanently labeled with the manufacturer's name, city, state, and the following statement: "Miami-Dade County Product Control Approved", or as specifically stated in the specific conditions of this Acceptance.

3. Renewals of Acceptance will not be considered if:
   a. There has been a change in the South Florida Building Code affecting the evaluation of this product and the product is not in compliance with the code changes.
   b. The product is no longer the same product (identical) as the one originally approved.
   c. If the Acceptance holder has not complied with all the requirements of this acceptance, including the correct installation of the product.
   d. The engineer, who originally prepared, signed and sealed the required documentation initially submitted, is no longer practicing the engineering profession.

4. Any revision or change in the materials, use, and/or manufacture of the product or process shall automatically be cause for termination of this Acceptance, unless prior written approval has been requested (through the filing of a revision application with appropriate fee) and granted by this office.

5. Any of the following shall also be grounds for removal of this Acceptance:
   a. Unsatisfactory performance of this product or process.
   b. Misuse of this Acceptance as an endorsement of any product, for sales, advertising or any other purposes.

6. The Notice of Acceptance number preceded by the words Miami-Dade County, Florida, and followed by the expiration date may be displayed in advertising literature. If any portion of the Notice of Acceptance is displayed, then it shall be done in its entirety.

7. A copy of this Acceptance as well as approved drawings and other documents, where it applies, shall be provided to the user by the manufacturer or its distributors and shall be available for inspection at the job site at all time. The engineer needs not reseal the copies.

8. Failure to comply with any section of this Acceptance shall be cause for termination and removal of Acceptance.

9. This Notice of Acceptance consists of pages 1, 2 and this last page 3.

**END OF THIS ACCEPTANCE**

Helmy A. Makar, P.E.- Product Control Examiner
Product Control Division

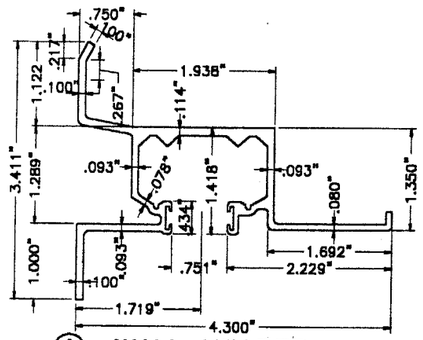


## (A) WALL HEADER

SCALE: 1/2"=1"

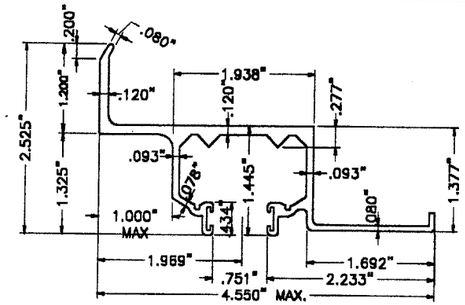


## (A1) WALL HEADER

SCALE: 1/2"=1"

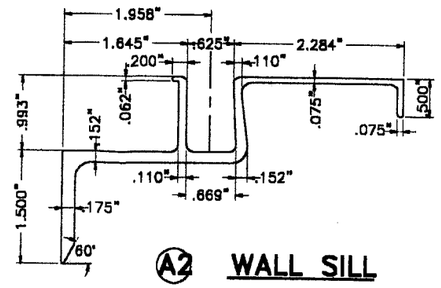


## (A2) WALL SILL

(6005-T5 ALUMINUM ALLOY)

SCALE: 1/2"=1"

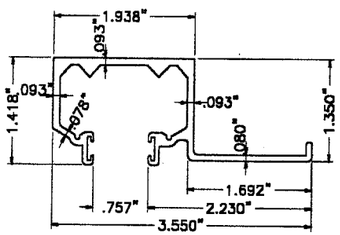


## (B) CEILING HEADER

SCALE: 1/2"=1"

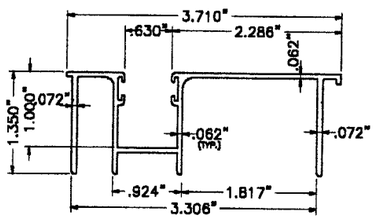


## (C) SILL

SCALE: 1/2"=1"

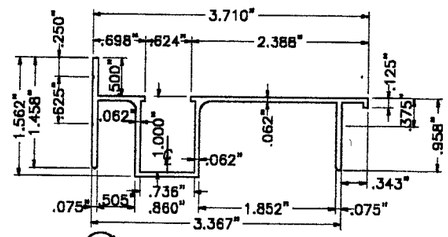


## (C') ALTERNATE SILL

SCALE: 1/2"=1"

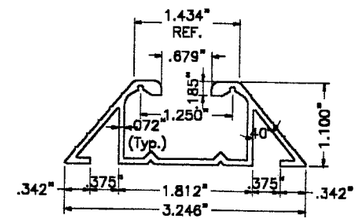


## (C1) THRESHOLD SILL

SCALE: 1/2"=1"

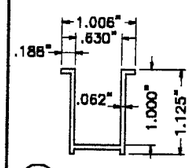


## (C2) THRENCH THRESHOLD SILL

SCALE: 1/2"=1"

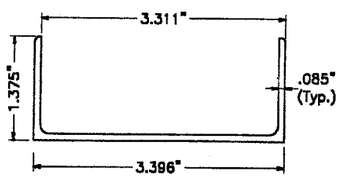


## (D) SILL ADAPTOR

SCALE: 1/2"=1"

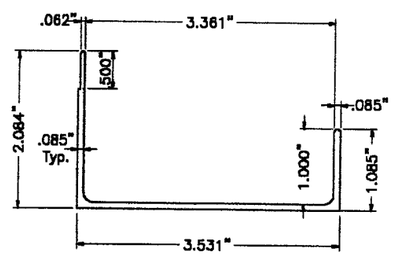


## (D') ALTERNATE SILL ADAPTOR

SCALE: 1/2"=1"

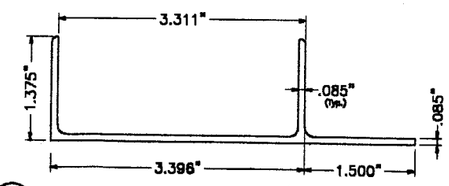


## (D1) SILL ADAPTOR W / LIP

SCALE: 1/2"=1"

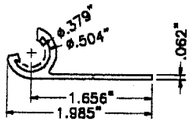


## (E) 180° STARTER

SCALE: 1/2"=1"

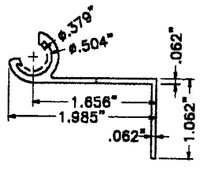


## (E1) 90° STARTER

SCALE: 1/2"=1"

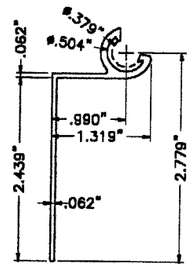


## (E2) 90° STARTER

SCALE: 1/2"=1"

## GENERAL NOTES:

1. THIS ACCORDION SHUTTER HAS BEEN DESIGNED IN ACCORDANCE WITH THE DADE COUNTY, 1994 EDITION OF THE SOUTH FLORIDA BUILDING CODE.
   DESIGN WIND LOADS SHALL BE DETERMINED AS PER SECTION 6 OF ASCE 7-88, WITH 110 m.p.h. BASIC WIND SPEED.
   ACCORDION SHUTTER'S ADEQUACY FOR IMPACT AND FATIGUE RESISTANCE HAS BEEN VERIFIED IN ACCORDANCE WITH SECTIONS 2315 & 2314 RESPECTIVELY OF THE ABOVE MENTIONED CODE.
   AS PER ATL REPORT # 0316.01-00
2. STAINLESS STEEL SHEET METAL SCREWS USED AT LOUVER PIN SHALL BE # 14 x 3", 410-HT MINIMUM SERIES W/ 135.0 ksi YIELD POINT & 180.0 ksi TENSILE STRENGTH. SCREWS SHALL BE COATED WITH XYLAN 5000 SERIES FLUOROPOLYMER COATINGS AS MANUFACTURED BY WHITFORD Co, BOX 507, WEST CHESTER PA. 19381, OR ALTERNATIVELY A #14x3" , 410-HT MINIMUM SERIES W/ 150.0 ksi YIELD POINT & 180.0 ksi TENSILE STRENGTH, W/ MAC DERMID INC. JS 500 PLATING AND MANUFACTURED TO ASTM F 593-95.
3. ALL ALUMINUM EXTRUSIONS SHALL BE 6063-T6 ALLOY UNLESS OTHERWISE NOTED.
4. ALL SCREWS TO BE STAINLESS STEEL 304 OR 316 SERIES
5. ALL ALUMINUM POP RIVETS TO BE 5052 ALUMINUM ALLOY WITH ALUMINUM MANDREL.
6. BOLTS TO BE 2024-T4 ALUMINUM ALLOY, GALVANIZED OR STAINLESS STEEL WITH 36 ksi MINIMUM YIELD POINT.
7. ANCHORS TO WALL SHALL BE AS FOLLOWS: (UNLESS OTHERWISE NOTED)
   (A) TO EXISTING POURED CONCRETE: (Min. f'c = 3 ksi)
   - 1/4"ø TAPCON AND MAXI-SET TAPCON, AS MANUFACTURED BY I. T. W. BUILDEX.
   - 5/16"ø & 3/8"ø RED HEAD DYNABOLT SLEEVE ANCHORS, AS MANUFACTURED BY I.T.W. RAMSET/RED HEAD
   - 1/4"ø x 7/8" CALK-IN ANCHORS AS MANUFACTURED BY POWERS FASTENING, INC.
   - 1/4"ø CRETE FLEX SS4 AS MANUFACTURED BY ELCO TEXTRON.

   NOTES:

   A.1) MINIMUM EMBEDMENT INTO POURED CONCRETE OF TAPCON ANCHORS, MAXI-SET TAPCONS & CRETE-FLEX SS4 IS 1 3/4", AND FOR RED HEAD DYNABOLTS IS 1 1/2"

   A.2) 1/4"ø x 7/8" CALK-IN ANCHORS SHALL BE ENTIRELY EMBEDDED INTO THE POURED CONCRETE. NO EMBEDMENT INTO STUCCO SHALL BE PERMITED.
   1/4" ø-20 SCREWS USED SHALL BE 1 1/2" LONG MINIMUM SHOULD STUCCO EXIST, AND 1" MINIMUM FOR WALLS WITH NO STUCCO.

   A.3) IN CASE THAT PRECAST STONE, PRECAST CONCRETE PANELS, OR PAVERS BE FOUND ON THE EXISTING WALL OR FLOOR, ANCHORS SHALL BE LONG ENOUGH TO REACH THE MAIN STRUCTURE BEHIND SUCH PANELS. ANCHORAGE SHALL BE AS INDICATED ON NOTES A.1) & A.2) ABOVE.

   (B) TO EXISTING CONCRETE BLOCK WALL:
   - 1/4"ø TAPCON AND MAXI-SET TAPCON, AS MANUFACTURED BY I. T. W. BUILDEX.
   - 5/16"ø & 3/8"ø RED HEAD DYNABOLT SLEEVE ANCHORS, AS MANUFACTURED BY I.T.W. RAMSET/RED HEAD
   - 1/4"ø x 7/8" CALK-IN ANCHORS AS MANUFACTURED BY POWERS FASTENING, INC.
   - 1/4"ø CRETE FLEX SS4 AS MANUFACTURED BY ELCO TEXTRON.

   NOTES:

   B.1) MINIMUM EMBEDMENT OF TAPCONS, MAXI-SET TAPCONS & CRETE-FLEX SS4 INTO CONCRETE BLOCK UNIT SHALL BE 1 1/4", AND FOR RED HEAD DYNABOLTS SHALL BE 1 1/2"

   B.2) 1/4"ø x 7/8" CALK-IN ANCHORS SHALL BE ENTIRELY EMBEDDED INTO THE POURED CONCRETE. NO EMBEDMENT INTO STUCCO SHALL BE PERMITED.
   1/4" ø-20 SCREWS USED SHALL BE 1 1/2" LONG MINIMUM SHOULD STUCCO EXIST, AND 1" MINIMUM FOR WALLS WITH NO STUCCO.

   B.3) IN CASE THAT PRECAST STONE, PRECAST CONCRETE PANELS, OR PAVERS BE FOUND ON THE EXISTING WALL OR FLOOR, ANCHORS SHALL BE LONG ENOUGH TO REACH THE MAIN STRUCTURE BEHIND SUCH PANELS. ANCHORAGE SHALL BE AS INDICATED ON NOTES B.1) & B.2) ABOVE.

   (C) ANCHORS SHALL BE INSTALLED FOLLOWING ALL OF THE RECOMMENDATIONS AND SPECIFICATIONS OF THE ANCHOR'S MANUFACTURER.
8. IT SHALL BE THE RESPONSIBILITY OF THE CONTRACTOR TO VERIFY THE SOUNDNESS OF THE STRUCTURE WHERE SHUTTER IS TO BE ATTACHED TO INSURE PROPER ANCHORAGE.
9. BLADE (G), AND THE KNUCKLES FOR CENTERMATES (H) (H1) (I) (I1) & STARTER (E) ARE UNDER THE PATENT OF EASTERN METALS.
10. EACH UNIT MUST BEAR A PERMANENT LABEL IN A VISIBLE PLACE WITH A WARNING NOTE INSTRUCTING THE TENANT OR HOME OWNER THAT ALL LOCKING PINS, AS WELL AS CENTERMATE LOCKERS MUST BE PROPERLY INSTALLED & BOLTED DURING PERIODS OF HURRICANE WARNING.
11. A PERMANENT SHUTTER MANUFACTURER'S LABEL SHALL BE PLACED ON THE EXPOSED SURFACE OF THE FEMALE LOCK SLAT (COMPONENTS (I) OR (I1)).
    ONE LABEL SHALL BE PLACED FOR EVERY OPENING. LABEL SHALL READ AS FOLLOWS:
    "BIG BERTHA HI-RISE ACCORDION SHUTTER"
    PROTECTIVE SHUTTER SYSTEMS, INC.
    POMPANO BEACH, FL.
    MIAMI-DADE COUNTY PRODUCT CONTROL APPROVED.

APPROVED AS COMPLYING WITH THE
SOUTH FLORIDA BUILDING CODE
DATE 05/30/2001
BY Helena A. Molina
PRODUCT CONTROL DIVISION
BUILDING CODE COMPLIANCE OFFICE
ACCEPTANCE NO. 01-0430.03

MIAMI-DADE COUNTY

# COMPONENTS

3/1/01


TILTECO INC.
TILLIT TESTING & ENGINEERING COMPANY
6595 N.W. 36th. St., Ste. 217, VIRGINIA GARDENS, Fl. 33166
Phone : (305)871-1530 , Fax : (305)871-1531
EB-0006719
WALTER A. TILLIT Jr. P. E.
FLORIDA Lic. # 44167


ASSA / BIG BERTHA HI-RISE ACCORDION SHUTTER

**PROTECTIVE SHUTTER SYSTEMS, INC.**
(A.S.S.A. # 5)
1631 S. DIXIE HWY. BLDG E-3
POMPANO BEACH, FL. 33060

| REV. No | DESCRIPTION | DATE | REV. No | DESCRIPTION | DATE |
|---|---|---|---|---|---|
| 1 | | | 3 | | |
| 2 | | | 4 | | |

| | |
|---|---|
| AS SHOWN | SCALE |
| 2/27/01 | DATE |
| 01-041 | DRAWING No |
| SHEET 1 OF 10 | |

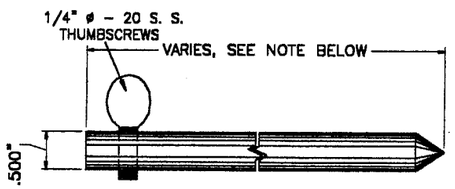


## (F) LOCKING PIN

SCALE: 1/2"=1"

6" Min. FOR UP TO 9'–0" SHUTTER BLADE LENGTHS, AND FOR SHUTTER BLADE LENGTHS GREATER THAN OR EQUAL TO 9'–1" INCREASE LOCKING PIN'S LENGTH BY 7/8" FOR EVERY 6" INCREASE ON SHUTTER BLADE'S LENGTH.

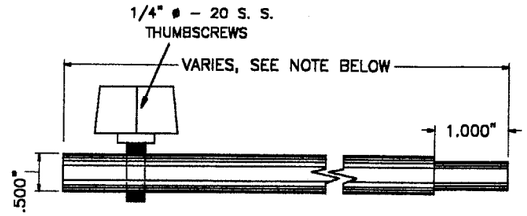


## (F1) ALTERNATE LOCKING PIN

SCALE: 1/2"=1"

6" Min. FOR UP TO 9'–0" SHUTTER BLADE LENGTHS, AND FOR SHUTTER BLADE LENGTHS GREATER THAN OR EQUAL TO 9'–1" INCREASE LOCKING PIN'S LENGTH BY 7/8" FOR EVERY 6" INCREASE ON SHUTTER BLADE'S LENGTH.

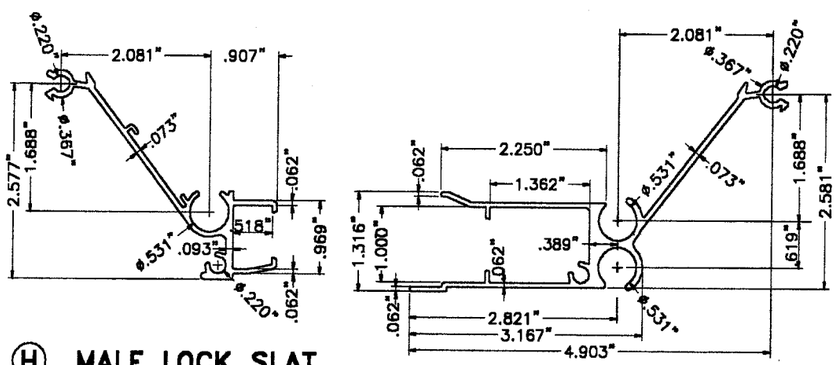


## (H) MALE LOCK SLAT

SCALE: 1/2"=1"

## (I) FEMALE LOCK SLAT

SCALE: 1/2"=1"

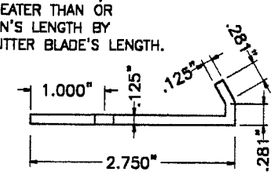


## PLAN

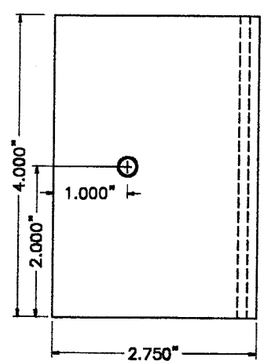


## ELEVATION

## (J) OUTSIDE or INSIDE LOCKER LOCKER FOR (H) & (I)

SCALE: 1/2"=1"

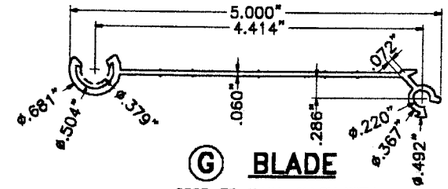


## (G) BLADE

6005–T5 ALUM. ALLOY WITH MIN. YIELD STRENGTH=41.62 ksi.

SCALE: 1/2"=1"

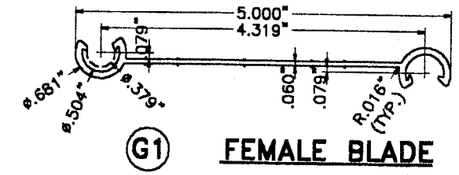


## (G1) FEMALE BLADE

6005–T5 ALUM. ALLOY WITH MIN. YIELD STRENGTH=41.62 ksi.

SCALE: 1/2"=1"

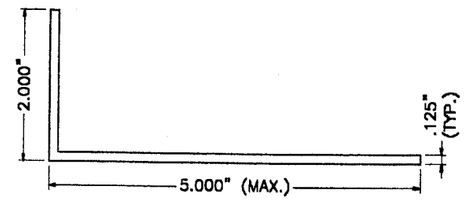


## (L1) ALUMINUM ANGLE

SCALE: 1/2"=1"

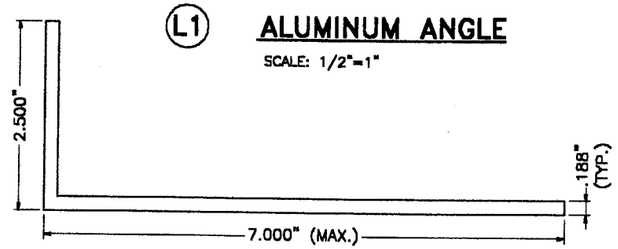


## (L2) ALUMINUM ANGLE

SCALE: 1/2"=1"

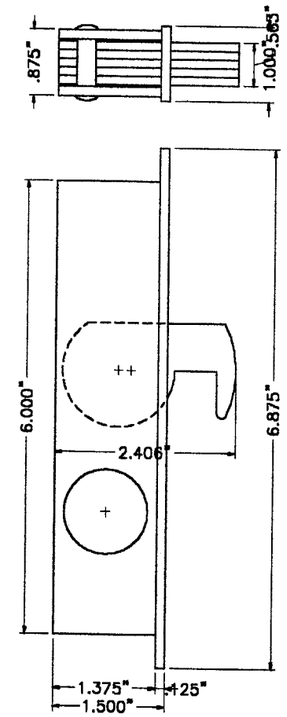


## (N) LOCK FOR (H1) & (I1)

GALVANIZED STEEL

SCALE: 1" = 1"

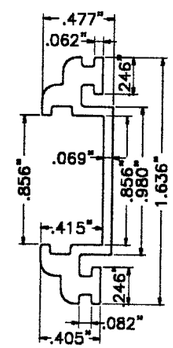


## (K) CENTERMATE LOCKING STYLE, FOR (H1) & (I1) x 7" LONG.

6063–T5 AL. ALLOY

SCALE: 1" = 1"

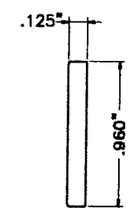


## (M) .960"x.125" BAR x 7" LONG FOR (H1) & (I1)

APPROVED AS COMPLYING WITH THE SOUTH FLORIDA BUILDING CODE
DATE 05/30/2001
BY Helmy A. Mahr
PRODUCT CONTROL DIVISION
BUILDING CODE COMPLIANCE OFFICE
ACCEPTANCE NO. 01-0430.03

MIAMI–DADE COUNTY

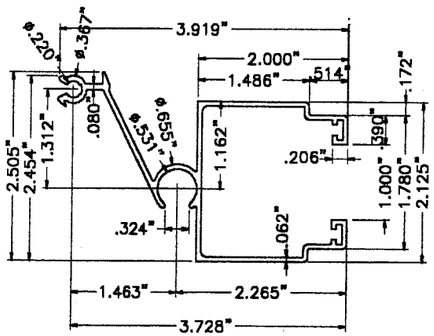


## (H1) HEAVY MALE LOCK SLAT

SCALE: 1/2"=1"

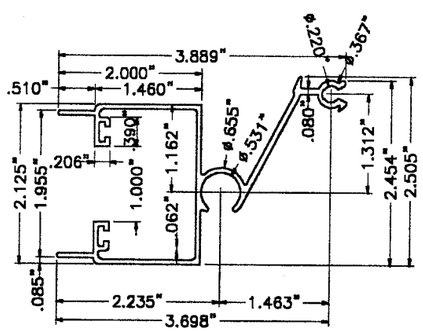


## (I1) HEAVY FEMALE LOCK SLAT

SCALE: 1/2"=1"

# COMPONENTS

3/1/01

TILTECO INC.
TILLIT TESTING & ENGINEERING COMPANY
6595 N.W. 36th. St., Ste. 217, VIRGINIA GARDENS, FL 33166
Phone : (305)871-1530 . Fax : (305)871-1531
EB-0006719
WALTER A. TILLIT Jr. P. E.
FLORIDA Lic. # 44187

ASSA / BIG BERTHA HI-RISE ACCORDION SHUTTER

**PROTECTIVE SHUTTER SYSTEMS, INC.**
(A.S.S.A. # 5)
1631 S. DIXIE HWY. BLDG E-3
POMPANO BEACH, FL. 33060

| REV. No | DESCRIPTION | DATE | REV. No | DESCRIPTION | DATE |
|---|---|---|---|---|---|
| 1 | | | 3 | | |
| 2 | | | 4 | | |

AS SHOWN
SCALE
2/27/01
DATE
01-041
DRAWING No
SHEET 2 OF 10

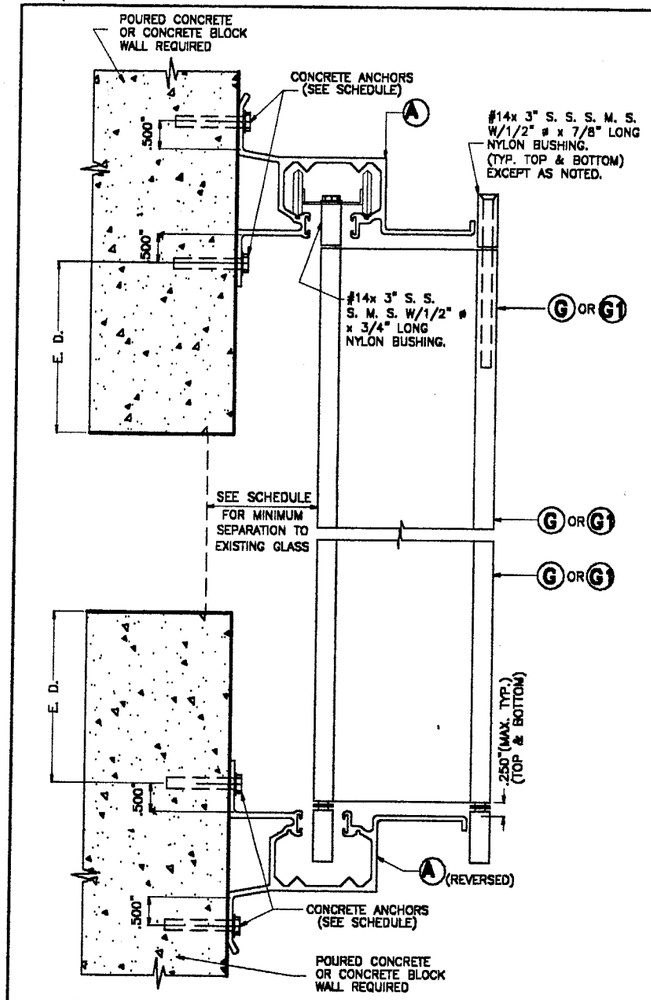


## WALL MOUNTING INSTALLATION SECTION A

SCALE: 3/8" = 1"

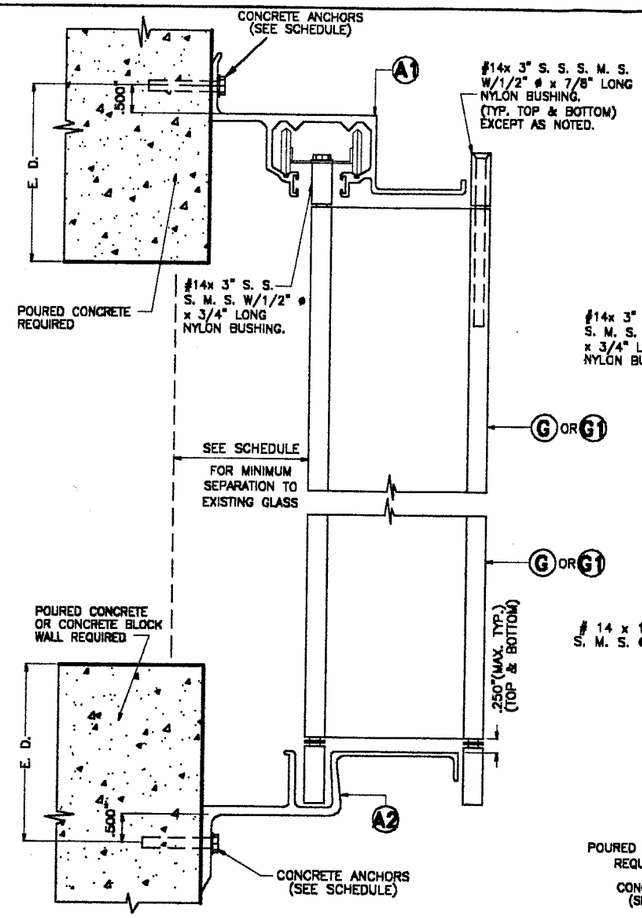


## WALL MOUNTING INSTALLATION SECTION A1

SCALE: 3/8" = 1"

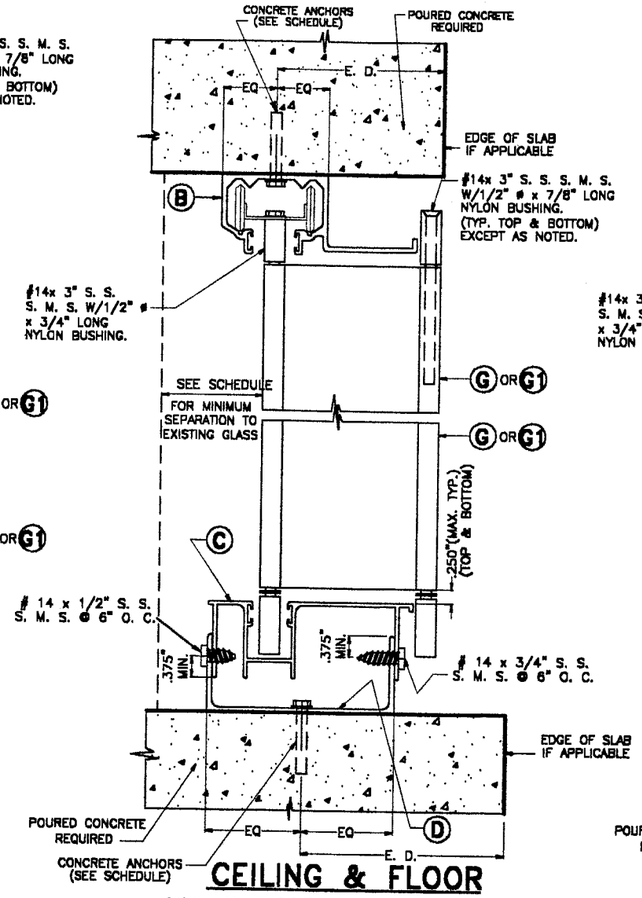


## CEILING & FLOOR MOUNTING INSTALLATION SECTION B

SCALE: 3/8" = 1"

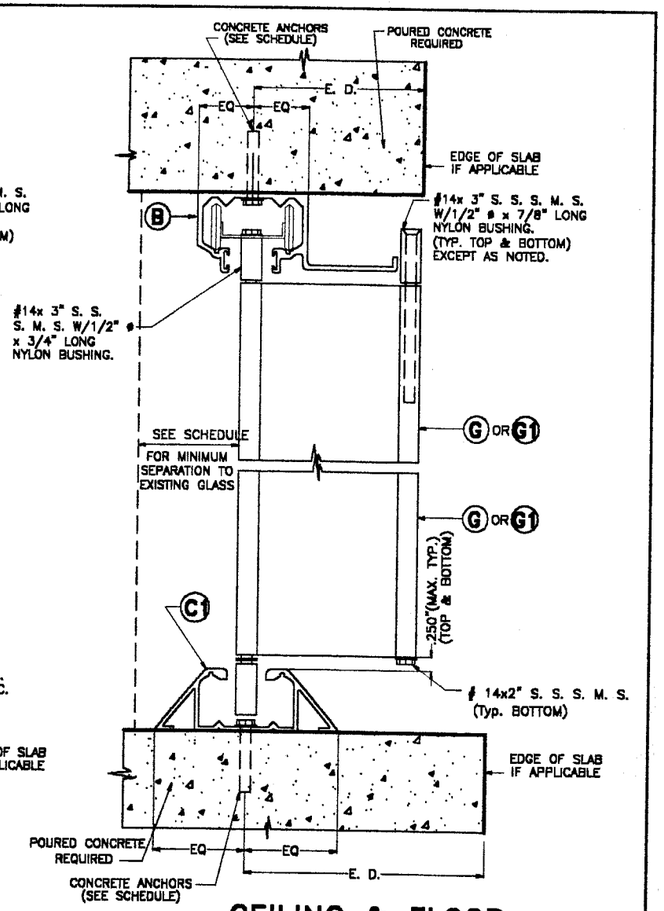


## CEILING & FLOOR MOUNTING INSTALLATION SECTION B2

SCALE: 3/8" = 1"

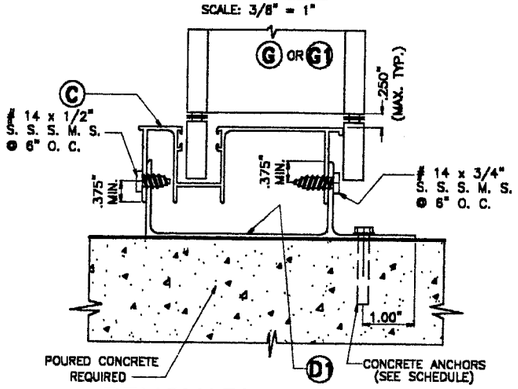


## REMOVABLE FLOOR MOUNTING INSTALLATION – SECTION B1

SCALE: 3/8" = 1"

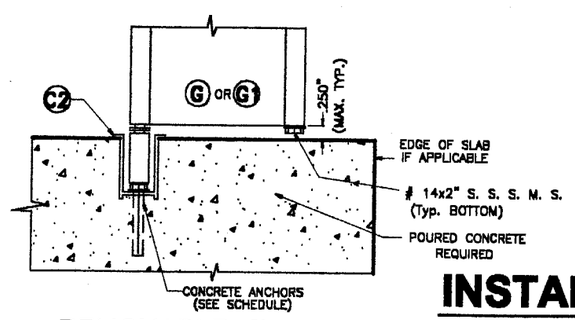


## REMOVABLE FLOOR MOUNTING INSTALLATION – SECTION B2A

SCALE: 3/8" = 1"

# INSTALLATION DETAILS

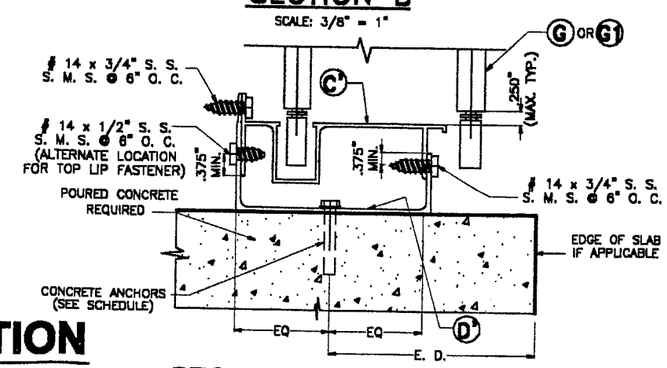


## SECTION B (ALTERNATE)

E. D. = EDGE DISTANCE (SEE SCHEDULE ON SHEET 8 OF 10)

3/1/01

APPROVED AS COMPLYING WITH THE SOUTH FLORIDA BUILDING CODE
DATE 05/30/2001
BY Helena A. Melo
PRODUCT CONTROL DIVISION
BUILDING CODE COMPLIANCE OFFICE
ACCEPTANCE NO. 01-0430.03

MIAMI-DADE COUNTY

TILTECO INC.
TILLIT TESTING & ENGINEERING COMPANY
6595 N.W. 36th. St., Ste. 217, VIRGINIA GARDENS, FL. 33166
Phone : (305)871-1530 . Fax : (305)871-1531
EB-0006719
WALTER A. TILLIT Jr. P. E.
FLORIDA Lic. # 44167

ASSA / BIG BERTHA HI-RISE ACCORDION SHUTTER

**PROTECTIVE SHUTTER SYSTEMS, INC.**
(A.S.S.A. # 5)
1631 S. DIXIE HWY. BLDG E-3
POMPANO BEACH, FL. 33060

| REV. No | DESCRIPTION | DATE | REV. No | DESCRIPTION | DATE |
|---|---|---|---|---|---|
| 1 | | | 3 | | |
| 2 | | | 4 | | |

| | |
|---|---|
| AS SHOWN | SCALE |
| 2/27/01 | DATE |
| 01-041 | DRAWING No |
| SHEET 3 OF 10 | |

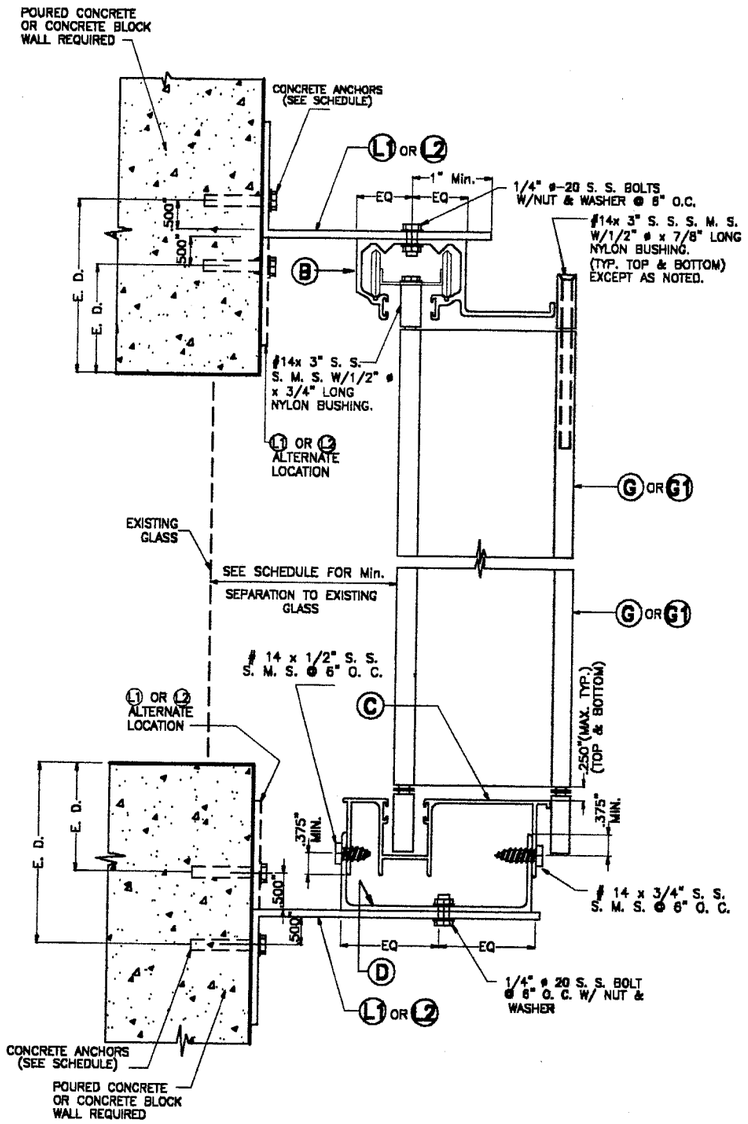


## BUILD-OUT INSTALLATION – SECTION C

SCALE: 3/8" = 1"

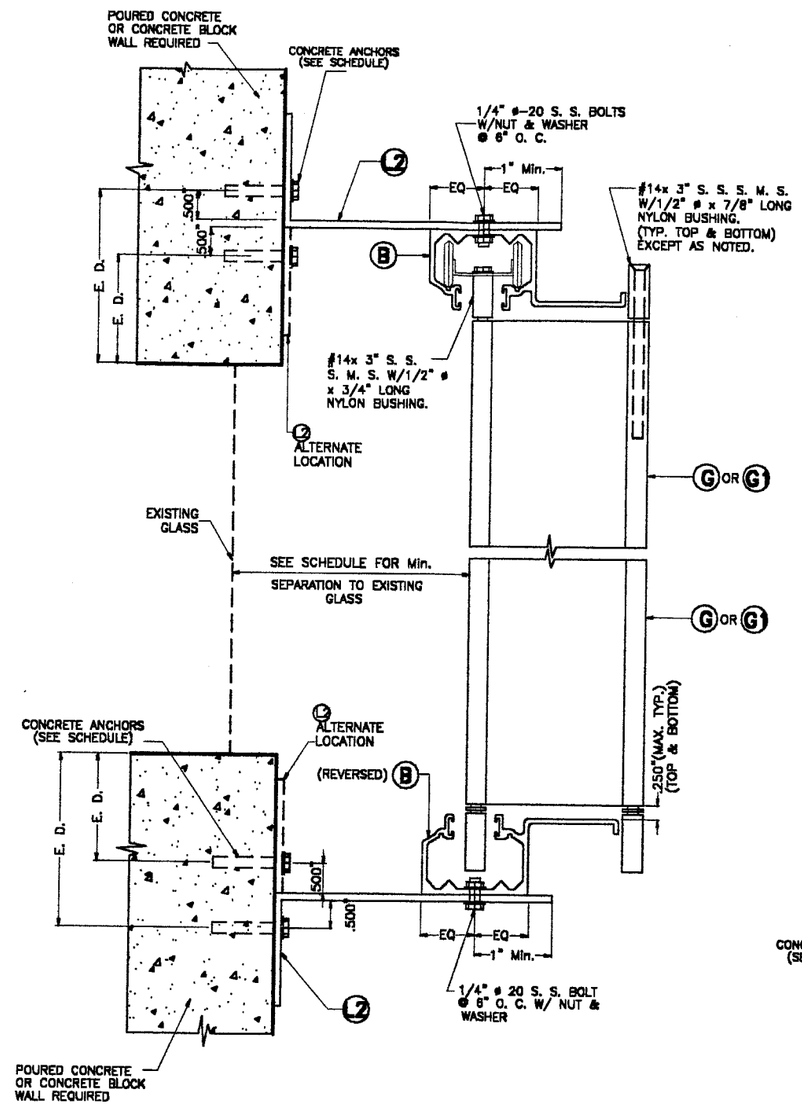


## ALTERNATE BUILD-OUT INSTALLATION – SECTION C1

SCALE: 3/8" = 1

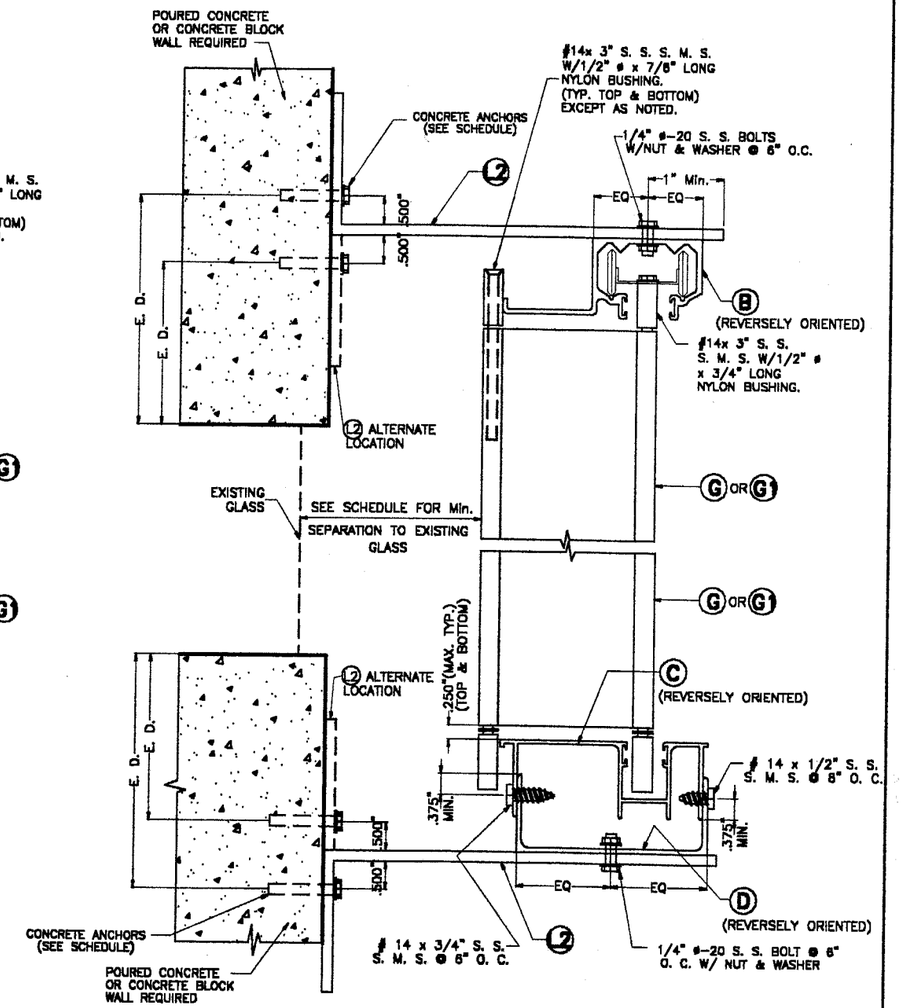


## WALL MOUNTING INSTALLATION – SECTION A2

SCALE: 3/8" = 1"

E. D. = EDGE DISTANCE (SEE SCHEDULE ON SHEET 8 &9 OF 10)

APPROVED AS COMPLYING WITH THE SOUTH FLORIDA BUILDING CODE
DATE 05/30/2001
BY Helmy A. Maher
PRODUCT CONTROL DIVISION
BUILDING CODE COMPLIANCE OFFICE
ACCEPTANCE NO. 01-0430.03

# INSTALLATION DETAILS

MIAMI-DADE COUNTY

8/1/07

TILTECO INC.
TILLIT TESTING & ENGINEERING COMPANY
6595 N.W. 36th. St., Ste. 217, VIRGINIA GARDENS, Fl. 33166
Phone : (305)871-1530 . Fax : (305)871-1531
EB-0006719
WALTER A. TILLIT Jr. P. E.
FLORIDA Lic. # 44167

ASSA / BIG BERTHA HI-RISE ACCORDION SHUTTER

**PROTECTIVE SHUTTER SYSTEMS, INC.**
(A.S.S.A. # 5)
1631 S. DIXIE HWY. BLDG E-3
POMPANO BEACH, FL. 33060

| REV. No | DESCRIPTION | DATE | REV. No | DESCRIPTION | DATE |
|---|---|---|---|---|---|
| 1 | | | 3 | | |
| 2 | | | 4 | | |

| | |
|---|---|
| AS SHOWN | SCALE |
| 2/27/01 | DATE |
| 01-041 | DRAWING No |
| SHEET 4 OF 10 | |

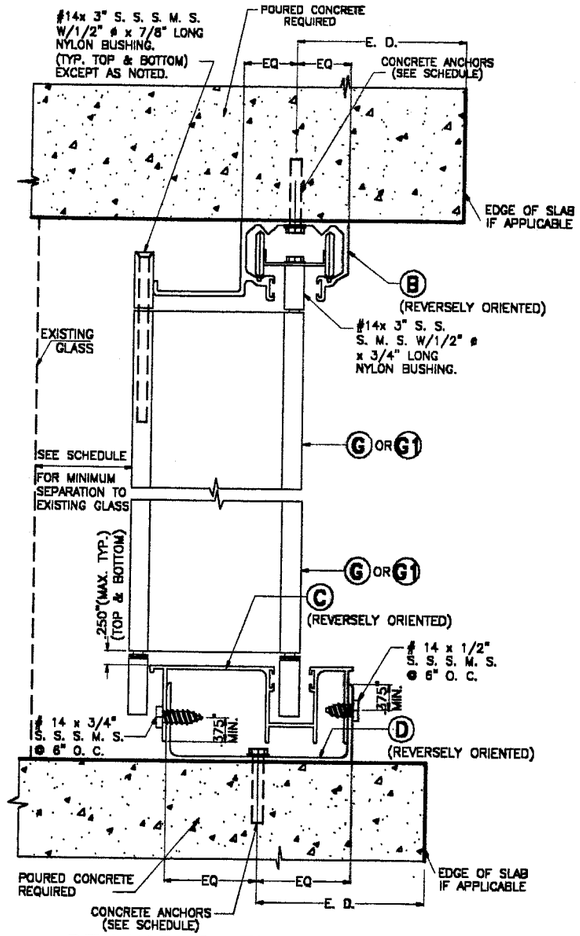


## CEILING & FLOOR MOUNTING INSTALLATION – SECTION B3

SCALE: 3/8" = 1"

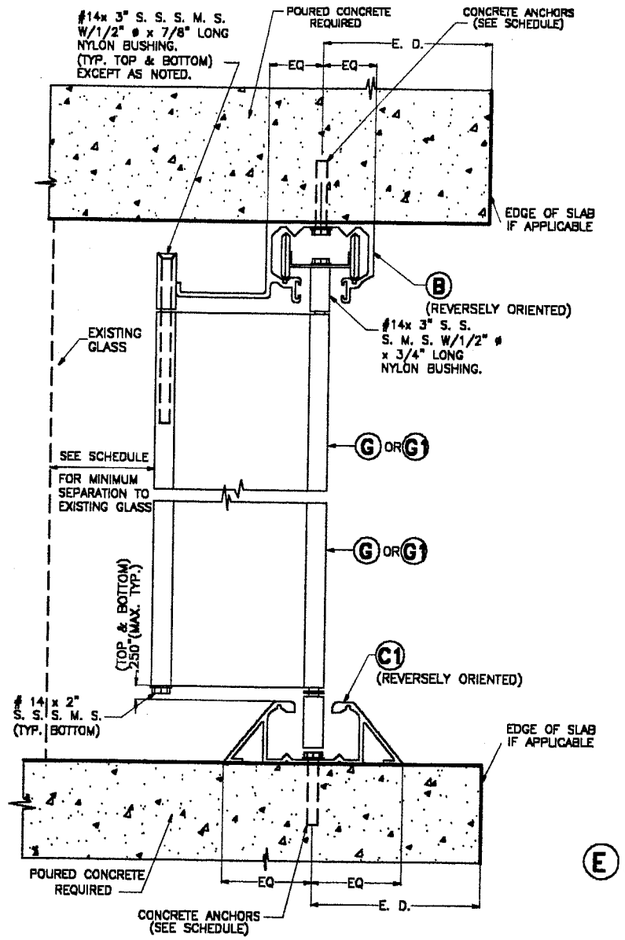


## CEILING & FLOOR MOUNTING INSTALLATION – SECTION B5

SCALE: 3/8" = 1"

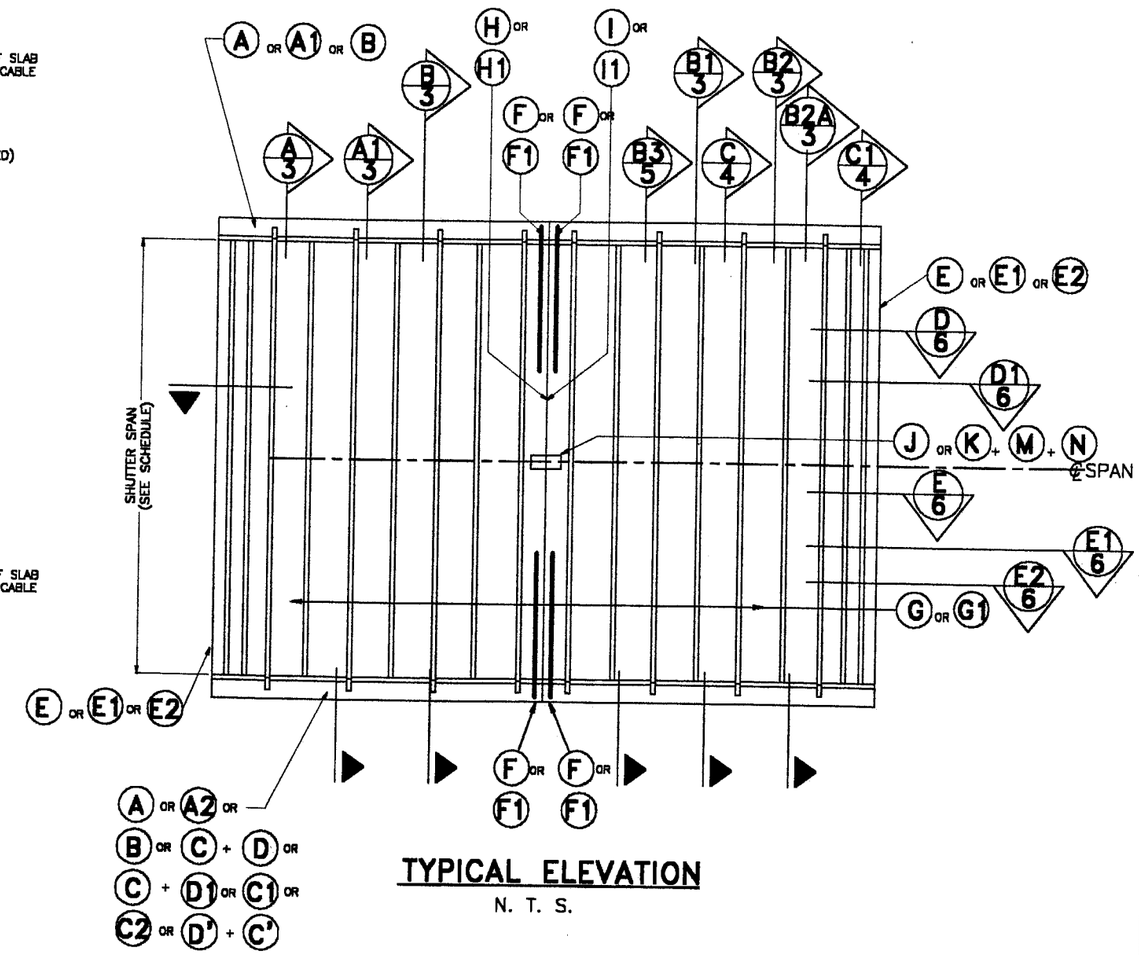


## TYPICAL ELEVATION

N. T. S.

E. D. = EDGE DISTANCE (SEE SCHEDULE ON SHEET 9 OF 10)

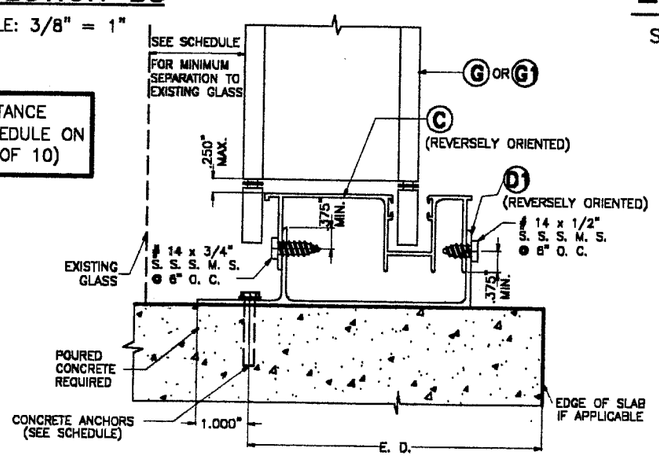


## CEILING & FLOOR MOUNTING INSTALLATION – SECTION B4

SCALE: 3/8" = 1"

# INSTALLATION DETAILS

APPROVED AS COMPLYING WITH THE SOUTH FLORIDA BUILDING CODE
DATE 05/30/2001
BY [signature]
PRODUCT CONTROL DIVISION
BUILDING CODE COMPLIANCE OFFICE
ACCEPTANCE NO. 01-0430.03

[signature]
3/1/01

MIAMI–DADE COUNTY

TILTECO INC.
TILLIT TESTING & ENGINEERING COMPANY
8595 N.W. 36th. St., Ste. 217, VIRGINIA GARDENS, Fl. 33166
Phone : (305)871-1530 . Fax : (305)871-1531
EB-0006719
WALTER A. TILLIT Jr. P. E.
FLORIDA Lic. # 44167

ASSA / BIG BERTHA HI-RISE ACCORDION SHUTTER

**PROTECTIVE SHUTTER SYSTEMS, INC.**
(A.S.S.A. # 5)
1631 S. DIXIE HWY. BLDG E-3
POMPANO BEACH, FL. 33060

| REV. No | DESCRIPTION | DATE | REV. No | DESCRIPTION | DATE |
|---|---|---|---|---|---|
| 1 | | | 3 | | |
| 2 | | | 4 | | |

AS SHOWN
SCALE
2/27/01
DATE
01-041
DRAWING No
SHEET 5 OF 10

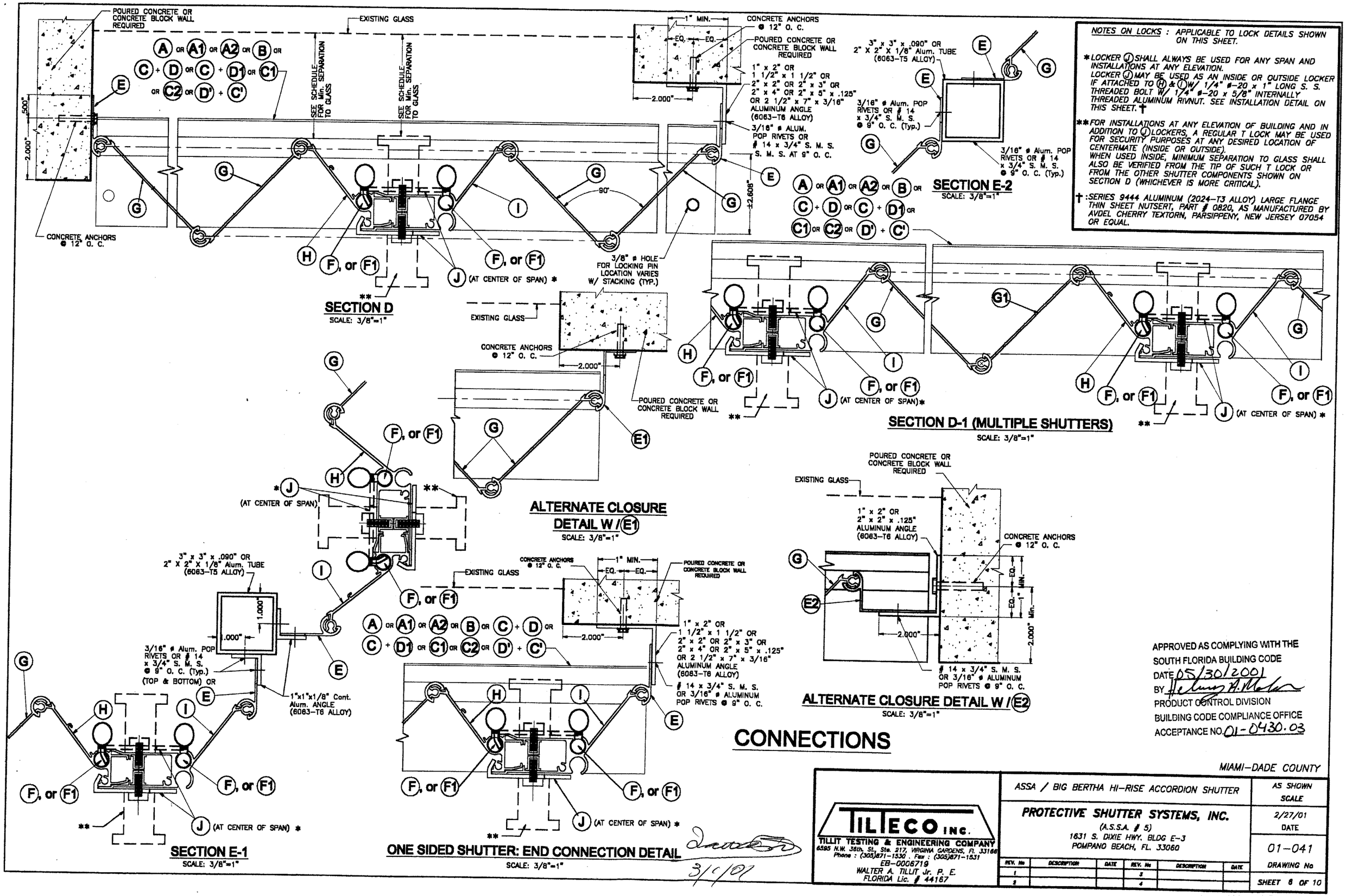


NOTES ON LOCKS : APPLICABLE TO LOCK DETAILS SHOWN ON THIS SHEET.

*LOCKER (J) SHALL ALWAYS BE USED FOR ANY SPAN AND INSTALLATIONS AT ANY ELEVATION.
LOCKER (J) MAY BE USED AS AN INSIDE OR OUTSIDE LOCKER IF ATTACHED TO (H) & (I) W/ 1/4" ø-20 x 1" LONG S. S. THREADED BOLT W/ 1/4" ø-20 x 5/8" INTERNALLY THREADED ALUMINUM RIVNUT. SEE INSTALLATION DETAIL ON THIS SHEET. †

**FOR INSTALLATIONS AT ANY ELEVATION OF BUILDING AND IN ADDITION TO (J) LOCKERS, A REGULAR T LOCK MAY BE USED FOR SECURITY PURPOSES AT ANY DESIRED LOCATION OF CENTERMATE (INSIDE OR OUTSIDE).
WHEN USED INSIDE, MINIMUM SEPARATION TO GLASS SHALL ALSO BE VERIFIED FROM THE TIP OF SUCH T LOCK OR FROM THE OTHER SHUTTER COMPONENTS SHOWN ON SECTION D (WHICHEVER IS MORE CRITICAL).

†:SERIES 9444 ALUMINUM (2024-T3 ALLOY) LARGE FLANGE THIN SHEET NUTSERT, PART # 0820, AS MANUFACTURED BY AVDEL CHERRY TEXTORN, PARSIPPENY, NEW JERSEY 07054 OR EQUAL.

APPROVED AS COMPLYING WITH THE SOUTH FLORIDA BUILDING CODE
DATE 05/30/2001
BY [signature]
PRODUCT CONTROL DIVISION
BUILDING CODE COMPLIANCE OFFICE
ACCEPTANCE NO. 01-0430.03

MIAMI-DADE COUNTY

TILTECO INC.
TILLIT TESTING & ENGINEERING COMPANY
6595 N.W. 36th. St. Ste. 217, VIRGINIA GARDENS, Fl. 33166
Phone : (305)871-1530 , Fax : (305)871-1531
EB-0006719
WALTER A. TILLIT Jr. P. E.
FLORIDA Lic. # 44167

3/1/01

ASSA / BIG BERTHA HI-RISE ACCORDION SHUTTER

PROTECTIVE SHUTTER SYSTEMS, INC.
(A.S.S.A. # 5)
1631 S. DIXIE HWY. BLDG E-3
POMPANO BEACH, FL. 33060

| REV. No | DESCRIPTION | DATE | REV. No | DESCRIPTION | DATE |
|---|---|---|---|---|---|
| 1 | | | 3 | | |
| 2 | | | 4 | | |

| | |
|---|---|
| AS SHOWN | SCALE |
| 2/27/01 | DATE |
| 01-041 | DRAWING No |
| SHEET 6 OF 10 | |

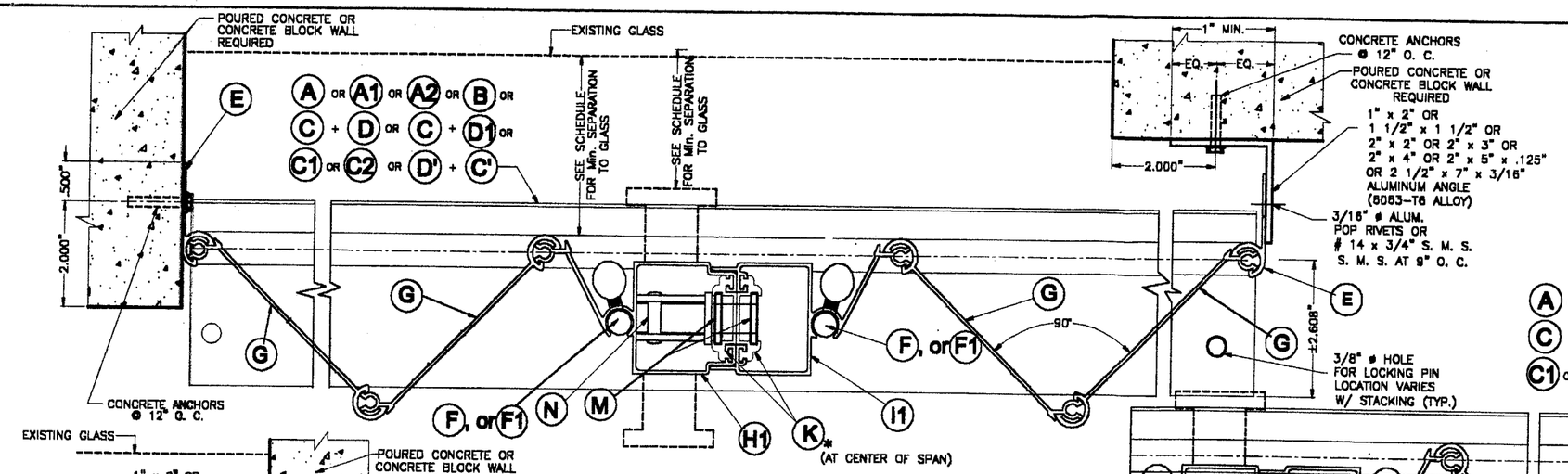


## SECTION D

SCALE: 3/8"=1"

NOTES ON LOCKS : APPLICABLE TO LOCK DETAILS SHOWN ON THIS SHEET.

* LOCKER (K) + (M) + (N) SHALL ALWAYS BE USED FOR ANY SPAN AND INSTALLATIONS AT ANY ELEVATION INSIDE OR OUTSIDE.

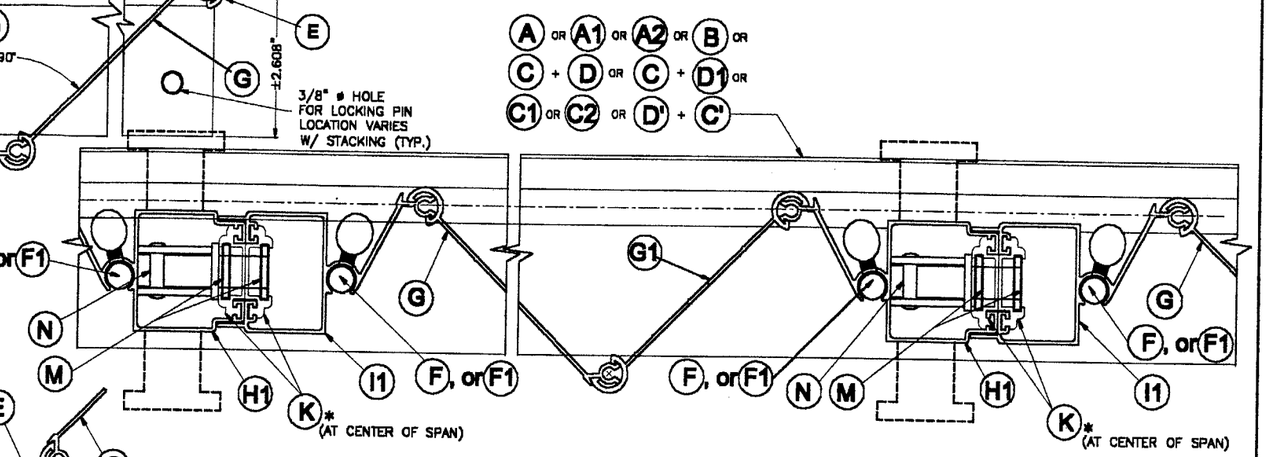


## SECTION D-1 (MULTIPLE SHUTTERS)

SCALE: 3/8"=1"

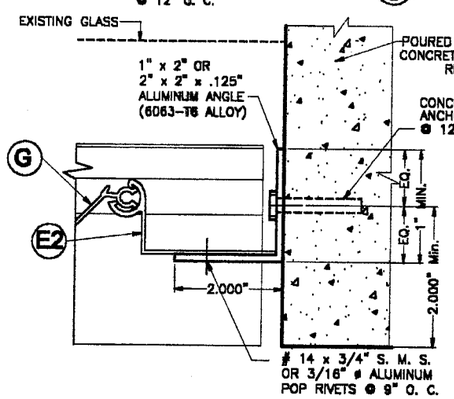


## ALTERNATE CLOSURE DETAIL W / E2

SCALE: 3/8"=1"

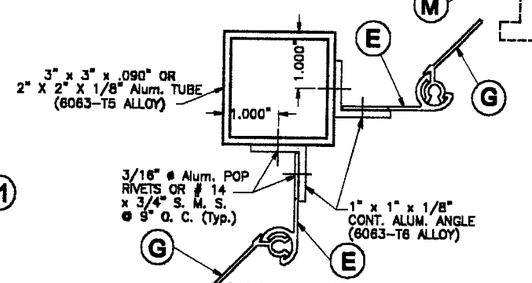


## SECTION E

SCALE: 3/8"=1"

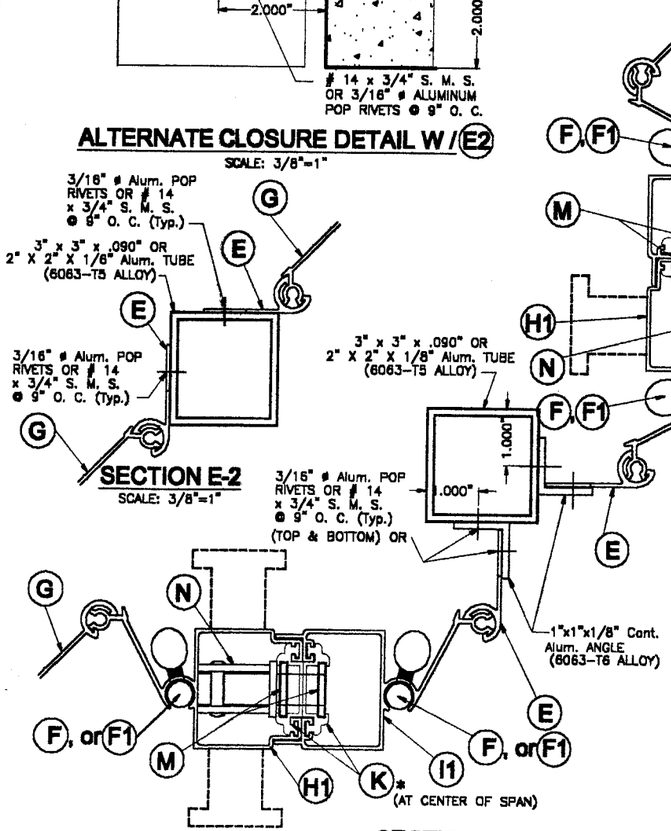


## SECTION E-2

SCALE: 3/8"=1"

## SECTION E-1

SCALE: 3/8"=1"

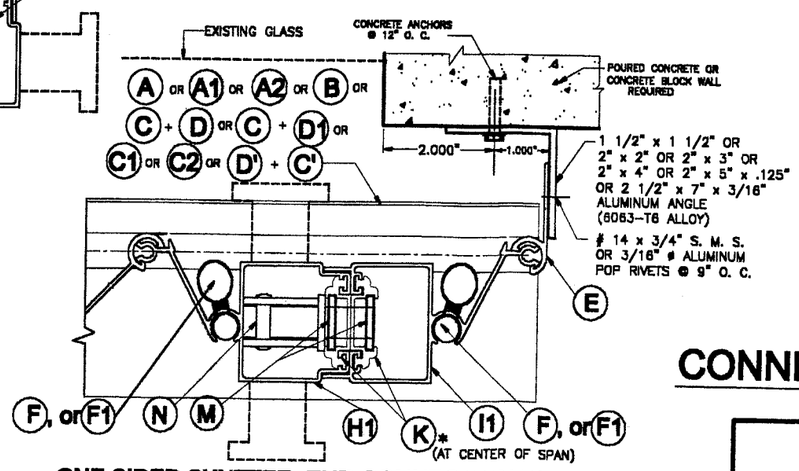


## ONE SIDED SHUTTER: END CONNECTION DETAIL

SCALE: 3/8"=1"

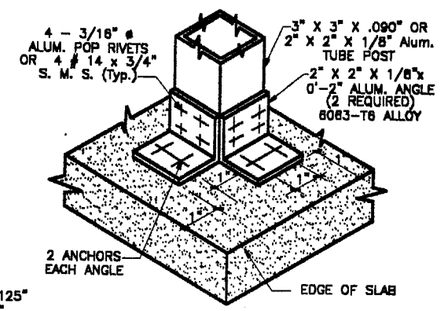


## ISOMETRIC (CORNER POST)

(Typ. AT TOP & BOTTOM SLABS)

# CONNECTIONS

APPROVED AS COMPLYING WITH THE SOUTH FLORIDA BUILDING CODE
DATE 05/30/2001
BY Helmy A. Moh
PRODUCT CONTROL DIVISION
BUILDING CODE COMPLIANCE OFFICE
ACCEPTANCE NO. 01-0430.03

MIAMI-DADE COUNTY

3/1/01

TILLECO INC.
TILLIT TESTING & ENGINEERING COMPANY
6595 N.W. 36th. St. Ste. 217, VIRGINIA GARDENS, FL 33166
Phone : (305)871-1530 . Fax : (305)871-1531
EB-0006719
WALTER A. TILLIT Jr. P. E.
FLORIDA Lic. # 44167

ASSA / BIG BERTHA HI-RISE ACCORDION SHUTTER

**PROTECTIVE SHUTTER SYSTEMS, INC.**
(A.S.S.A. # 5)
1631 S. DIXIE HWY. BLDG E-3
POMPANO BEACH, FL. 33060

| REV. No | DESCRIPTION | DATE | REV. No | DESCRIPTION | DATE |
|---|---|---|---|---|---|
| 1 | | | 3 | | |
| 2 | | | 4 | | |

AS SHOWN
SCALE
2/27/01
DATE
01-041
DRAWING No
SHEET 7 OF 10

## MAXIMUM DESIGN PRESSURE RATING "W" (p.s.f.) AND CORRESPONDING MAXIMUM SPAN "L" SCHEDULE.

(VALID FOR SECTIONS A, A1, B, B1, B2, B2A, C & C1 ON SHEET 3 & 4).

NOTE:
DESIGN PRESSURE RATING CORRESPONDS ONLY TO NEGATIVE PRESSURE (SUCTION) LOADS, IN ACCORDANCE WITH ASCE 7-88 CRITERIA FOR A GIVEN OPENING. IF NEGATIVE PRESSURE VALUES COMPLY WITH THE REQUIRED PRESSURE FOR THE OPENING, THE POSITIVE PRESSURE WILL AUTOMATICALLY QUALIFY AND NEED NOT TO BE CHECKED.

| MAXIMUM DESIGN LOAD "W" (p.s.f.) | MAXIMUM SHUTTER SPAN FOR SECTIONS "L" (ft.) | | | MINIMUM SEPARATION TO GLASS (in.) ALL SECTIONS | |
|---|---|---|---|---|---|
| | A, B, B1, C & C1 | A1 | B2, B2A | * | ** |
| 40 | 16'-0" | 16'-0" | 16'-0" | 3" | 3" |
| 45 | 15'-11" | 15'-11" | 15'-11" | 3" | 3" |
| 50 | 15'-6" | 15'-6" | 15'-1" | 3" | 3" |
| 55 | 15'-1" | 15'-1" | 14'-4" | 3" | 3" |
| 60 | 14'-9" | 14'-9" | 13'-9" | 3" | 3" |
| 65 | 14'-6" | 14'-6" | 13'-3" | 3" | 3" |
| 70 | 14'-3" | 13'-11" | 12'-9" | 3" | 3" |
| 75 | 14'-0" | 13'-6" | 12'-4" | 3" | 3" |
| 80 | 13'-9" | 13'-1" | 11'-11" | 3" | 3" |
| 85 | 13'-5" | 12'-8" | 11'-7" | 3" | 3" |
| 90 | 13'-1" | 12'-4" | 11'-3" | 3" | 3" |
| 95 | 12'-9" | 12'-0" | 10'-11" | 3" | 3" |
| 100 | 12'-5" | 11'-8" | 10'-8" | 3" | 3" |
| 105 | 12'-1" | 11'-5" | 10'-5" | 3" | 3" |
| 110 | 11'-10" | 11'-1" | 10'-2" | 3" | 3" |
| 115 | 11'-7" | 10'-11" | 9'-11" | 3" | 3" |
| 120 | 11'-4" | 10'-8" | 9'-9" | 3" | 3" |
| 125 | 11'-1" | 10'-5" | 9'-6" | 3" | 3" |
| 130 | 10'-11" | 10'-3" | 9'-4" | 3" | 3" |
| 135 | 10'-8" | 10'-0" | 9'-2" | 3" | 3" |
| 140 | 10'-6" | 9'-10" | 9'-0" | 3" | 3" |
| 145 | 10'-4" | 9'-8" | 8'-8" | 3" | 3" |
| 150 | 10'-2" | 9'-6" | 8'-5" | 3" | 3" |
| 155 | 10'-0" | 9'-4" | 8'-2" | 3" | 3" |
| 160 | 9'-10" | 9'-3" | 7'-10" | 3" | 3" |
| 165 | 9'-8" | 9'-1" | 7'-8" | 3" | 3" |
| 170 | 9'-6" | 8'-11" | 7'-5" | 3" | 3" |
| 175 | 9'-5" | 8'-8" | 7'-2" | 3" | 3" |
| 180 | 9'-3" | 8'-5" | 7'-0" | 3" | 3" |
| 185 | 9'-1" | 8'-2" | 6'-10" | 3 1/2" | 3" |
| 190 | 8'-11" | 7'-11" | 6'-8" | 3 1/2" | 3" |
| 195 | 8'-8" | 7'-9" | 6'-6" | 3 1/2" | 3" |
| 200 | 8'-5" | 7'-7" | 6'-4" | 3 1/2" | 3" |
| 205 | 8'-3" | 7'-5" | 6'-2" | 3 1/2" | 3" |
| 210 | 8'-0" | 7'-2" | 6'-0" | 3 1/2" | 3" |
| 215 | 7'-10" | 7'-0" | 5'-10" | 3 1/2" | 3" |
| 220 | 7'-8" | 6'-10" | 5'-9" | 3 1/2" | 3" |
| 225 | 7'-6" | 6'-9" | 5'-7" | 3 1/2" | 3" |
| 230 | 7'-4" | 6'-7" | 5'-6" | 3 1/2" | 3" |

* FOR SHUTTERS INSTALLED WITHIN THE FIRST 30'-0" ELEVATION OF BUILDING MEASURED AT BOTTOM OF SHUTTER.

** FOR SHUTTERS INSTALLED ABOVE 30'-0" ELEVATION OF BUILDING, MEASURED AT BOTTOM OF SHUTTER.

(SEE ANCHORS LEGEND BELOW.)

## MAXIMUM DESIGN PRESSURE RATING "W" (p.s.f.) AND CORRESPONDING MAXIMUM ANCHOR SPACING (in.) SCHEDULE. +

(VALID FOR SECTIONS A, B, B1, C & C1 ON SHEET 3 & 4).

| MAXIMUM DESIGN LOAD "W" (p.s.f.) | WALL MOUNTING INSTALLATION AT TOP OR BOTTOM (TO CONCRETE) SECTIONS A, C & C1 — SHUTTER SPAN | | | WALL MOUNTING INSTALLATION AT TOP OR BOTTOM (TO MASONRY) SECTIONS A, C & C1 — SHUTTER SPAN | | | FLOOR/CEILING MOUNTING INSTALLATION TOP OR BOTTOM (TO CONCRETE) SECTIONS B & B1 — SHUTTER SPAN | | |
|---|---|---|---|---|---|---|---|---|---|
| | 5'-0" OR LESS | 5'-0" TO 8'-6" | 8'-6" TO MAX. ALLOWED | 5'-0" OR LESS | 5'-0" TO 8'-6" | 8'-6" TO MAX. ALLOWED | 5'-0" OR LESS | 5'-0" TO 8'-6" | 8'-6" TO MAX. ALLOWED |
| FROM 40.0 TO 60.0 | 6 | 6 | 6 | 6 | 6 | 3.5 | 6 | 6 | 6 |
| | 6 | 6 | 6 | 6 | 6 | 6 | 6 | 6 | 6 |
| | 6 | 6 | 6 | 6 | 6 | 6 | 6 | 6 | 6 |
| | 6 | 6 | 6 | 6 | 6 | 5.0 | 6 | 6 | 6 |
| | 6 | 6 | 6 | 6 | 6 | 6 | 6 | 6 | 6 |
| FROM 60.0 TO 75.0 | 6 | 6 | 6 | 6 | 6 | – | 6 | 6 | 5.0 |
| | 6 | 6 | 6 | 6 | 6 | 4.5 | 6 | 6 | 5.6 |
| | 6 | 6 | 6 | 6 | 6 | 5.5 | 6 | 6 | 6 |
| | 6 | 6 | 6 | 6 | 6 | 4.5 | 6 | 6 | 5.0 |
| | 6 | 6 | 6 | 6 | 6 | 5.0 | 6 | 6 | 6 |
| FROM >75.0 TO 90.0 | 6 | 6 | 6 | 6 | 4.5 | – | 6 | 6 | 4.5 |
| | 6 | 6 | 6 | 6 | 6 | 4.0 | 6 | 6 | 5.0 |
| | 6 | 6 | 6 | 6 | 6 | 5.0 | 6 | 6 | 6 |
| | 6 | 6 | 6 | 6 | 6 | 3.0 | 6 | 6 | 4.5 |
| | 6 | 6 | 6 | 6 | 6 | 4.5 | 6 | 6 | 5 |
| FROM 90.0 TO 120.0 | 6 | 6 | 5 | 6 | – | – | 6 | 5 | 4 |
| | 6 | 6 | 5 | 6 | 5 | – | 6 | 6 | 4.5 |
| | 6 | 6 | 6 | 6 | 5.5 | – | 6 | 6 | 5.5 |
| | 6 | 6 | 5 | 6 | 4 | 2.5 | 6 | 5 | 4 |
| | 6 | 6 | 6 | 6 | 5.5 | 3.5 | 6 | 6 | 5.5 |
| FROM 120.0 TO 170.0 | 6 | 4.5 | 4 | 3.5 | – | – | 6 | 3.5 | 3 |
| | 6 | 4.5 | 4 | 6 | – | – | 6 | 4 | – |
| | 6 | 5.5 | 4.5 | 6 | 3.5 | 3 | 6 | 5 | 4.5 |
| | 6 | 4.5 | 4 | 5 | 2.5 | – | 6 | 3.5 | 3 |
| | 6 | 6 | 5 | 6 | 3 | 3 | 6 | 5 | 4.5 |
| FROM 170.0 TO 230.0 | 6 | 3.5 | 3.5 | – | – | – | 4 | 3 | 3 |
| | 6 | – | – | 4 | – | – | 5 | – | – |
| | 6 | 4.5 | 4.5 | 5 | – | – | 6 | – | – |
| | 6 | 3.5 | 3.5 | 3 | – | – | 4.5 | 3 | 3 |
| | 6 | 5 | 5 | 4.5 | – | – | 6 | 4.5 | 4.5 |

(SEE ANCHORS LEGEND BELOW.)

## MAXIMUM DESIGN PRESSURE RATING "W" (p.s.f.) AND CORRESPONDING MAXIMUM ANCHOR SPACING (in.) SCHEDULE. +

(VALID FOR SECTION A1 ON SHEET 3).

| MAXIMUM DESIGN LOAD "W" (p.s.f.) | WALL MOUNTING INSTALLATION AT TOP (TO CONCRETE) — SHUTTER SPAN | | | WALL MOUNTING INSTALLATION AT BOTTOM (TO CONCRETE OR MASONRY) — SHUTTER SPAN | | |
|---|---|---|---|---|---|---|
| | 5'-0" OR LESS | 5'-0" TO 8'-6" | 8'-6" TO MAX. ALLOWED | 5'-0" OR LESS | 5'-0" TO 8'-6" | 8'-6" TO MAX. ALLOWED |
| FROM 40.0 TO 60.0 | 12 | 12 | 7 | 6 | 6 | 5.5 |
| | 12 | 12 | 7.5 | 6 | 6 | 6 |
| | 12 | 12 | 8.5 | 6 | 6 | 6 |
| | 12 | 12 | 7 | 6 | 6 | 6 |
| | 12 | 12 | 9 | 6 | 6 | 6 |
| FROM 60.0 TO 75.0 | 12 | 12 | 4.5 | 6 | 4 | 4 |
| | 12 | 12 | 5 | 6 | 4 | 4 |
| | 12 | 12 | 5.5 | 6 | – | – |
| | 12 | 12 | 4.5 | 6 | 4 | 4 |
| | 12 | 12 | 6.5 | 6 | 4 | 4 |
| FROM >75.0 TO 90.0 | 12 | 12 | 3.5 | 4 | 4 | 4 |
| | 12 | 12 | 4 | 4 | 4 | 4 |
| | 12 | 12 | 4.5 | – | – | – |
| | 12 | 12 | 4 | 4 | 4 | 4 |
| | 12 | 12 | 5.0 | 4 | 4 | 4 |
| FROM 90.0 TO 120.0 | 12 | 4.5 | 3 | 4 | 4 | 3.5 |
| | 12 | 4.5 | – | 4 | 4 | 4 |
| | 12 | 5.5 | – | – | – | – |
| | 12 | 4.5 | 3 | 4 | 4 | 3 |
| | 12 | 6 | 4 | 4 | 4 | 4 |
| FROM 120.0 TO 170.0 | 8 | – | – | 4 | 3 | 3 |
| | 8 | – | – | 4 | 4 | 4 |
| | 9 | – | – | – | – | – |
| | 8 | 2.5 | – | 4 | 3 | 3 |
| | 10.5 | 3 | – | 4 | 4 | 4 |
| FROM 170.0 TO 230.0 | 3.5 | – | – | 4 | 3 | 3 |
| | 6.5 | – | – | 4 | 4 | 4 |
| | 8 | – | – | – | – | – |
| | 3.5 | – | – | 4 | 4 | 4 |
| | 9 | – | – | 4 | 4 | 4 |

(SEE ANCHORS LEGEND BELOW.)

## MAXIMUM DESIGN PRESSURE RATING "W" (p.s.f.) AND CORRESPONDING MAXIMUM ANCHOR SPACING (in.) SCHEDULE. +

(VALID FOR SECTIONS B2 & B2A ON SHEET 3).

| MAXIMUM DESIGN LOAD "W" (p.s.f.) | FLOOR/CEILING MOUNTING INSTALLATION TOP OR BOTTOM (TO CONCRETE) — SHUTTER SPAN | | |
|---|---|---|---|
| | 5'-0" OR LESS | 5'-0" TO 8'-6" | 8'-6" TO MAX. ALLOWED |
| FROM 40.0 TO 60.0 | 6 | 6 | 6 |
| | 6 | 6 | 6 |
| | 6 | 6 | 6 |
| | 6 | 6 | 6 |
| | 6 | 6 | 6 |
| FROM 60.0 TO 75.0 | 6 | 6 | 6 |
| | 6 | 6 | 6 |
| | 6 | 6 | 6 |
| | 6 | 6 | 6 |
| | 6 | 6 | 6 |
| FROM >75.0 TO 90.0 | 6 | 6 | 6 |
| | 6 | 6 | 6 |
| | 6 | 6 | 6 |
| | 6 | 6 | 6 |
| | 6 | 6 | 6 |
| FROM 90.0 TO 120.0 | 6 | 6 | 5.5 |
| | 6 | 6 | 6 |
| | 6 | 6 | 6 |
| | 6 | 6 | 5.5 |
| | 6 | 6 | 6 |
| FROM 120.0 TO 170.0 | 6 | 5 | 5 |
| | 6 | 6 | 6 |
| | 6 | 6 | 6 |
| | 6 | 5 | 5 |
| | 6 | 6 | 6 |
| FROM 170.0 TO 230.0 | 5.5 | 5 | 5 |
| | 6 | 6 | 6 |
| | 6 | 6 | 6 |
| | 5.5 | 5 | 5 |
| | 6 | 6 | 6 |

+ MAXIMUM ANCHOR SPACINGS ARE VALID FOR 3 1/2" EDGE DISTANCE. FOR E. D. LESS THAN 3 1/2", REDUCE ANCHOR SPACING BY MULTIPLYING SPACING SHOWN ON SCHEDULE BY THE FOLLOWING FACTORS. (NOTE : Min. E. D. FOR CALK-IN ANCHORS IS 2 1/2"). REDUCED SPACING OBTAINED USING FACTOR SHALL NOT BE LESS THAN MINIMUM SPACING INDICATED FOR EACH ANCHOR TYPE AT ANCHORS LEGEND.

| ACTUAL E. D. | FACTOR |
|---|---|
| 3" | .86 |
| 2 1/2" | .75 |
| 2" | .50 |

ANCHORS LEGEND

| ANCHORS TYPE | ANCHOR MIN. SPACING |
|---|---|
| TAPCON OR MAXI-SET TAPCONS | 3.0" |
| 5/16"øRED HD DYNABOLT SLEEVE | 3.75" |
| 3/8"øRED HD DYNABOLT SLEEVE | 4.5" |
| CALK-IN | 2.5" |
| CRETE-FLEX SS4 | 3.0" |

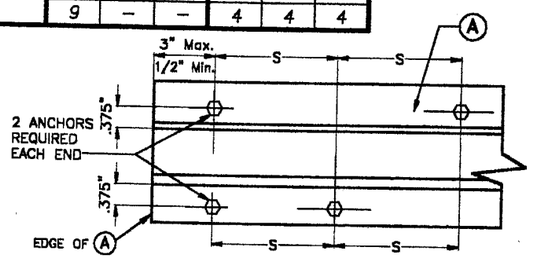


ANCHORS USED W/TRACK "A" (TOP & BOTTOM) SHALL BE INSTALLED AT Max. SPACINGS ("S") INDICATED ON SCHEDULES.
S = ANCHOR SPACING GIVEN ON SCHEDULE

APPROVED AS COMPLYING WITH THE SOUTH FLORIDA BUILDING CODE
DATE 05/30/2001
BY [signature]
PRODUCT CONTROL DIVISION
BUILDING CODE COMPLIANCE OFFICE
ACCEPTANCE NO. 01-0430.03

MIAMI-DADE COUNTY

3/1/01


TILTECO INC.
TILLIT TESTING & ENGINEERING COMPANY
6585 N.W. 36th. St. Ste. 217 VIRGINIA GARDENS, FL 33166
Phone : (305)871-1530 . Fax : (305)871-1531
EB-0006719
WALTER A. TILLIT Jr. P. E.
FLORIDA Lic. # 44167


ASSA / BIG BERTHA HI-RISE ACCORDION SHUTTER

**PROTECTIVE SHUTTER SYSTEMS, INC.**
(A.S.S.A. # 5)
1631 S. DIXIE HWY. BLDG E-3
POMPANO BEACH, FL. 33060

| REV. No | DESCRIPTION | DATE | REV. No | DESCRIPTION | DATE |
|---|---|---|---|---|---|
| 1 | | | 3 | | |
| 2 | | | 4 | | |

AS SHOWN
SCALE
2/27/01
DATE
01-041
DRAWING No
SHEET 8 OF 10

## MAXIMUM DESIGN PRESSURE RATING "W" (p.s.f.) AND CORRESPONDING MAXIMUM ANCHOR SPACING (in.) SCHEDULE. +

(VALID FOR SECTIONS A2, B3, B4, B5 ON SHEETS 4 & 5).

NOTE:
DESIGN PRESSURE RATING CORRESPONDS ONLY TO NEGATIVE PRESSURE (SUCTION) LOADS, IN ACCORDANCE WITH ASCE 7-88 CRITERIA FOR A GIVEN OPENING. IF NEGATIVE PRESSURE VALUES COMPLY WITH THE REQUIRED PRESSURE FOR THE OPENING, THE POSITIVE PRESSURE WILL AUTOMATICALLY QUALIFY AND NEED NOT TO BE CHECKED.

| MAXIMUM DESIGN LOAD "W" (p.s.f.) | MAXIMUM SHUTTER SPAN FOR SECTIONS "L" (ft.) | | MINIMUM SEPARATION TO GLASS (in.) ALL SECTIONS | |
|---|---|---|---|---|
| | A2, B3, B4 | B5 | * | ** |
| 40 | 16'-0" | 16'-0" | 3" | 3" |
| 45 | 15'-11" | 15'-11" | 3" | 3" |
| 50 | 15'-6" | 15'-6" | 3" | 3" |
| 55 | 15'-1" | 15'-1" | 3" | 3" |
| 60 | 14'-9" | 14'-9" | 3" | 3" |
| 65 | 14'-6" | 14'-6" | 3" | 3" |
| 70 | 14'-3" | 14'-3" | 3" | 3" |
| 75 | 14'-0" | 14'-0" | 3" | 3" |
| 80 | 13'-9" | 13'-9" | 3" | 3" |
| 85 | 13'-7" | 13'-5" | 3" | 3" |
| 90 | 13'-4" | 13'-1" | 3" | 3" |
| 95 | 13'-2" | 12'-9" | 3" | 3" |
| 100 | 13'-0" | 12'-5" | 3" | 3" |
| 105 | 12'-10" | 12'-1" | 3" | 3" |
| 110 | 12'-8" | 11'-10" | 3" | 3" |
| 115 | 12'-5" | 11'-7" | 3" | 3" |
| 120 | 12'-2" | 11'-4" | 3" | 3" |
| 125 | 11'-11" | 11'-1" | 3" | 3" |
| 130 | 11'-9" | 10'-11" | 3" | 3" |
| 135 | 11'-6" | 10'-8" | 3" | 3" |
| 140 | 11'-3" | 10'-6" | 3" | 3" |
| 145 | 11'-1" | 10'-4" | 3" | 3" |
| 150 | 10'-11" | 10'-2" | 3" | 3" |
| 155 | 10'-9" | 10'-0" | 3" | 3" |
| 160 | 10'-7" | 9'-10" | 3" | 3" |
| 165 | 10'-5" | 9'-8" | 3" | 3" |
| 170 | 10'-3" | 9'-6" | 3" | 3" |
| 175 | 10'-1" | 9'-5" | 3" | 3" |
| 180 | 9'-11" | 9'-3" | 3" | 3" |
| 185 | 9'-10" | 9'-1" | 3" | 3" |
| 190 | 9'-8" | 9'-0" | 3" | 3" |
| 195 | 9'-7" | 8'-9" | 3" | 3" |
| 200 | 9'-5" | 8'-7" | 3" | 3" |
| 205 | 9'-4" | 8'-4" | 3" | 3" |
| 210 | 9'-3" | 8'-2" | 3" | 3" |
| 215 | 9'-1" | 7'-11" | 3" | 3" |
| 220 | 9'-0" | 7'-9" | 3 1/2" | 3" |
| 225 | 8'-9" | 7'-7" | 3 1/2" | 3" |
| 230 | 8'-7" | 7'-5" | 3 1/2" | 3" |

* FOR SHUTTERS INSTALLED WITHIN THE FIRST 30'-0" ELEVATION OF BUILDING MEASURED AT BOTTOM OF SHUTTER.

** FOR SHUTTERS INSTALLED ABOVE 30'-0" ELEVATION OF BUILDING, MEASURED AT BOTTOM OF SHUTTER.

(SEE ANCHORS LEGEND BELOW.)

## MAXIMUM DESIGN PRESSURE RATING "W" (p.s.f.) AND CORRESPONDING MAXIMUM ANCHOR SPACING (in.) SCHEDULE. +

(VALID FOR SECTIONS A2, B3, B4 ON SHEETS 4 & 5).

| MAXIMUM DESIGN LOAD "W" (p.s.f.) | WALL MOUNTING INSTALLATION AT TOP (TO CONCRETE) SECTION A2 | | | WALL MOUNTING INSTALLATION AT BOTTOM (TO MASONRY) SECTION A2 | | | FLOOR/CEILING MOUNTING INSTALLATION TOP OR BOTTOM (TO CONCRETE) SECTIONS B3, B4 | | |
|---|---|---|---|---|---|---|---|---|---|
| | SHUTTER SPAN | | | SHUTTER SPAN | | | SHUTTER SPAN | | |
| | 5'-0" OR LESS | 5'-0" TO 8'-6" | 8'-6" TO MAX. ALLOWED | 5'-0" OR LESS | 5'-0" TO 8'-6" | 8'-6" TO MAX. ALLOWED | 5'-0" OR LESS | 5'-0" TO 8'-6" | 8'-6" TO MAX. ALLOWED |
| FROM 40.0 TO 60.0 | 6 | 6 | 6 | 6 | 6 | 5.5 | 6 | 6 | 6 |
| | 6 | 6 | 6 | 6 | 6 | 6 | 6 | 6 | 6 |
| | 6 | 6 | 6 | 6 | 6 | 6 | 6 | 6 | 6 |
| | 6 | 6 | 6 | 6 | 6 | 6 | 6 | 6 | 6 |
| | 6 | 6 | 6 | 6 | 6 | 6 | 6 | 6 | 6 |
| FROM 60.0 TO 75.0 | 6 | 6 | 6 | 6 | 6 | 4.5 | 6 | 6 | 6 |
| | 6 | 6 | 6 | 6 | 6 | 6 | 6 | 6 | 6 |
| | 6 | 6 | 6 | 6 | 6 | 6 | 6 | 6 | 6 |
| | 6 | 6 | 6 | 6 | 6 | 6 | 6 | 6 | 6 |
| | 6 | 6 | 6 | 6 | 6 | 6 | 6 | 6 | 6 |
| FROM >75.0 TO 90.0 | 6 | 6 | 6 | 6 | 6 | 4.5 | 6 | 6 | 5.5 |
| | 6 | 6 | 6 | 6 | 6 | 6 | 6 | 6 | 6 |
| | 6 | 6 | 6 | 6 | 6 | 6 | 6 | 6 | 6 |
| | 6 | 6 | 6 | 6 | 6 | 6 | 6 | 6 | 6 |
| | 6 | 6 | 6 | 6 | 6 | 6 | 6 | 6 | 6 |
| FROM 90.0 TO 120.0 | 6 | 6 | 6 | 6 | 4.5 | – | 6 | 6 | 4.5 |
| | 6 | 6 | 6 | 6 | 6 | 4.5 | 6 | 6 | 5.5 |
| | 6 | 6 | 6 | 6 | 6 | 5.5 | 6 | 6 | 6 |
| | 6 | 6 | 6 | 6 | 6 | 3.5 | 6 | 6 | 5.0 |
| | 6 | 6 | 6 | 6 | 6 | 5.0 | 6 | 6 | 6 |
| FROM 120.0 TO 170.0 | 6 | 6 | 5 | 5.5 | – | – | 6 | 4.5 | 4 |
| | 6 | 6 | 5.5 | 6 | 5 | – | 6 | 5.5 | 4.5 |
| | 6 | 6 | 6 | 6 | 6 | – | 6 | 6 | 5.5 |
| | 6 | 6 | 6 | 6 | 3.5 | 2.5 | 6 | 5 | 4 |
| | 6 | 6 | 5 | 6 | 5 | 3.5 | 6 | 6 | 6 |
| FROM 170.0 TO 230.0 | 6 | 4 | 4 | 4 | – | – | 5 | 3 | 3 |
| | 6 | 4.5 | 4.5 | 6 | – | – | 6 | – | – |
| | 6 | 5 | 5 | 6 | – | – | 6 | 4.5 | 4.5 |
| | 6 | 4 | 4 | 6 | – | – | 5 | 3 | 3 |
| | 6 | 5.5 | 5.5 | 6 | 3 | 3 | 6 | 4.5 | 4.5 |

+ MAXIMUM ANCHOR SPACING ARE VALID FOR 3 1/2" EDGE DISTANCE. FOR E. D. LESS THAN 3 1/2", REDUCE ANCHOR SPACING BY MULTIPLYING SPACING SHOWN ON SCHEDULE BY THE FOLLOWING FACTORS. (NOTE : Min. E. D. FOR CALK-IN ANCHORS IS 2 1/2"). REDUCED SPACING OBTAINED USING FACTOR SHALL NOT BE LESS THAN MINIMUM SPACING INDICATED FOR EACH ANCHOR TYPE AT ANCHORS LEGEND.

| ACTUAL E. D. | FACTOR |
|---|---|
| 3" | .86 |
| 2 1/2" | .75 |
| 2" | .50 |

ANCHORS LEGEND

| ANCHORS TYPE | ANCHOR MIN. SPACING |
|---|---|
| TAPCON OR MAXI-SET TAPCONS | 3.0" |
| 5/16"ØRED HD DYNABOLT SLEEVE | 3.75" |
| 3/8"ØRED HD DYNABOLT SLEEVE | 4.5" |
| CALK-IN | 2.5" |
| CRETE-FLEX SS4 | 3.0" |

3/1/02

(SEE ANCHORS LEGEND BELOW.)

## MAXIMUM DESIGN PRESSURE RATING "W" (p.s.f.) AND CORRESPONDING MAXIMUM ANCHOR SPACING (in.) SCHEDULE. +

(VALID FOR SECTION B5 ON SHEET 5).

| MAXIMUM DESIGN LOAD "W" (p.s.f.) | FLOOR/CEILING MOUNTING INSTALLATION TOP OR BOTTOM (TO CONCRETE) | | |
|---|---|---|---|
| | SHUTTER SPAN | | |
| | 5'-0" OR LESS | 5'-0" TO 8'-6" | 8'-6" TO MAX. ALLOWED |
| FROM 40.0 TO 60.0 | 6 | 6 | 6 |
| | 6 | 6 | 6 |
| | 6 | 6 | 6 |
| | 6 | 6 | 6 |
| | 6 | 6 | 6 |
| FROM 60.0 TO 75.0 | 6 | 6 | 6 |
| | 6 | 6 | 6 |
| | 6 | 6 | 6 |
| | 6 | 6 | 6 |
| | 6 | 6 | 6 |
| FROM >75.0 TO 90.0 | 6 | 6 | 5.5 |
| | 6 | 6 | 6 |
| | 6 | 6 | 6 |
| | 6 | 6 | 5.5 |
| | 6 | 6 | 6 |
| FROM 90.0 TO 120.0 | 6 | 6 | 4.5 |
| | 6 | 6 | 5.5 |
| | 6 | 6 | 5 |
| | 6 | 6 | 4.5 |
| | 6 | 6 | 6 |
| FROM 120.0 TO 170.0 | 6 | 4 | 4 |
| | 6 | 5 | 4.5 |
| | 6 | 6 | 5.5 |
| | 6 | 4.5 | 4 |
| | 6 | 6 | 5.5 |
| FROM 170.0 TO 230.0 | 5.5 | 3.5 | 3.5 |
| | 6 | 4 | 4 |
| | 6 | 5 | 5 |
| | 5.5 | 3.5 | 3.5 |
| | 6 | 5.5 | 5.5 |

APPROVED AS COMPLYING WITH THE SOUTH FLORIDA BUILDING CODE
DATE 05/30/2001
BY Helmy A. Mekar
PRODUCT CONTROL DIVISION
BUILDING CODE COMPLIANCE OFFICE
ACCEPTANCE NO. 01-0430.03

MIAMI-DADE COUNTY

TILTECO INC.
TILLIT TESTING & ENGINEERING COMPANY
6585 N.W. 36th. St., Ste. 217, VIRGINIA GARDENS, FL. 33166
Phone : (305)871-1530 . Fax : (305)871-1531
EB-0006719
WALTER A. TILLIT Jr. P. E.
FLORIDA Lic. # 44167

ASSA / BIG BERTHA HI-RISE ACCORDION SHUTTER

**PROTECTIVE SHUTTER SYSTEMS, INC.**
(A.S.S.A. # 5)
1831 S. DIXIE HWY. BLDG E-3
POMPANO BEACH, FL. 33060

| REV. No | DESCRIPTION | DATE | REV. No | DESCRIPTION | DATE |
|---|---|---|---|---|---|
| 1 | | | 3 | | |
| 2 | | | 4 | | |

AS SHOWN
SCALE
2/27/01
DATE
01-041
DRAWING No
SHEET 9 OF 10

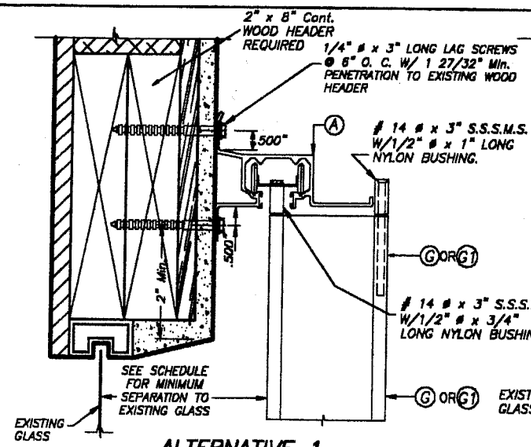


ALTERNATIVE 1

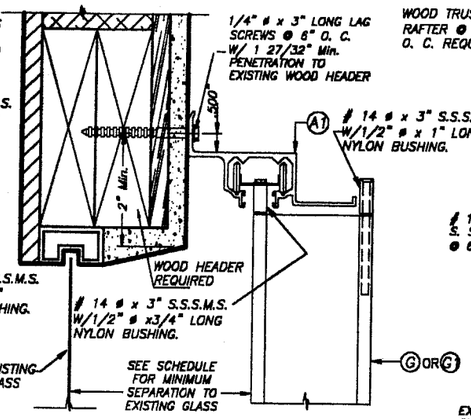


ALTERNATIVE 3

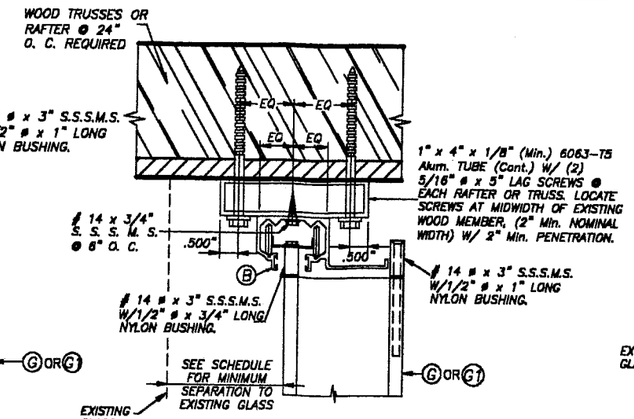


ALTERNATIVE 6

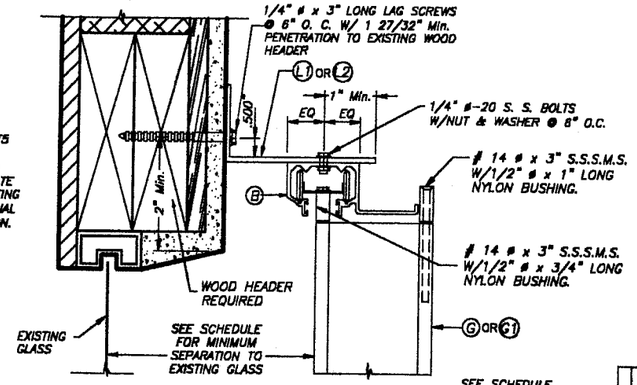


ALTERNATIVE 9

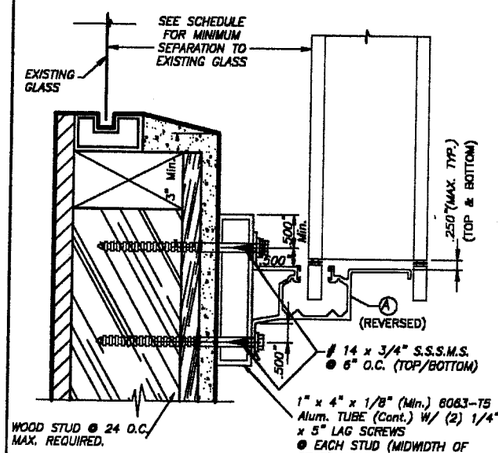


ALTERNATIVE 2

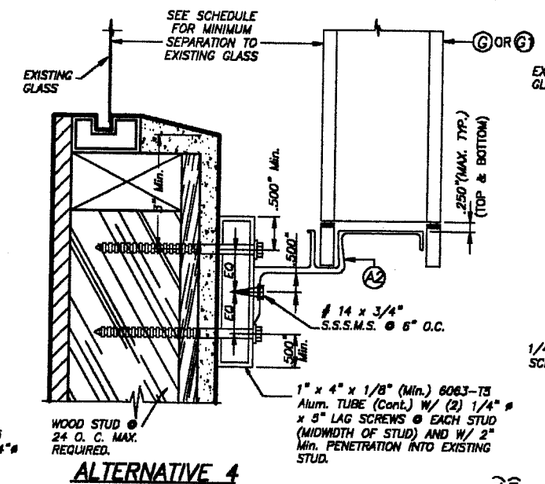


ALTERNATIVE 4

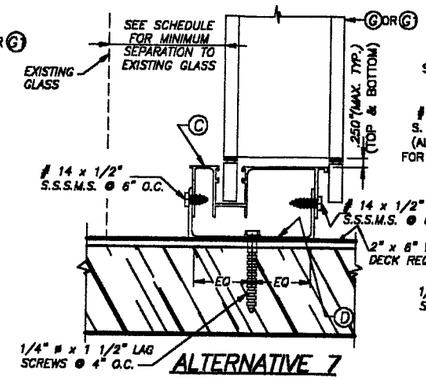


ALTERNATIVE 7

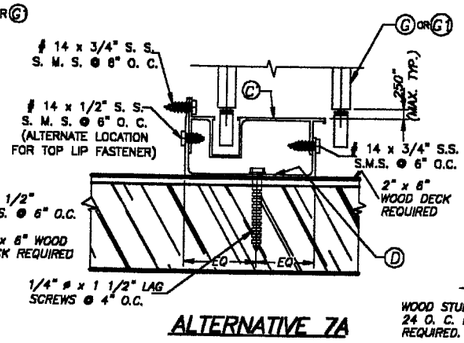


ALTERNATIVE 7A

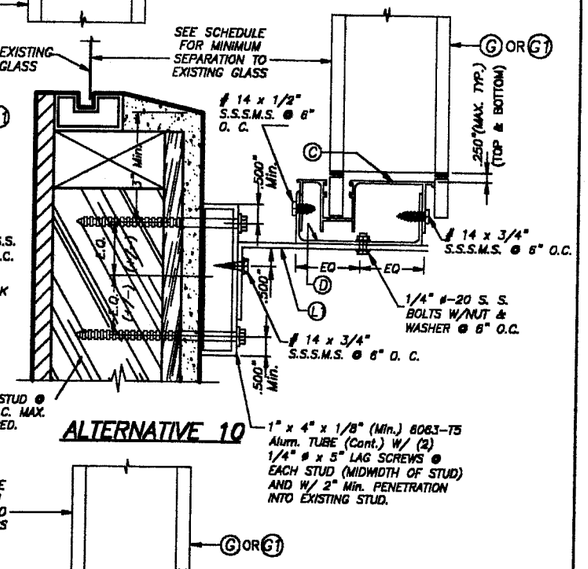


ALTERNATIVE 10

WALL MOUNTING INSTALLATIONS
SECTIONS A

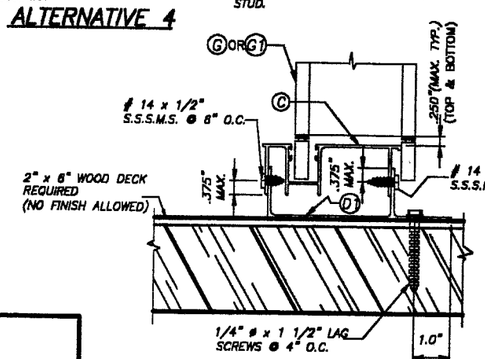


ALTERNATIVE 5

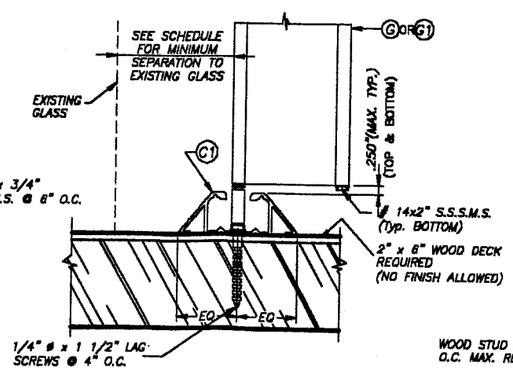


ALTERNATIVE 8

CEILING & FLOOR MOUNTING INSTALLATION
SECTIONS B
SCALE: 1/4" = 1"

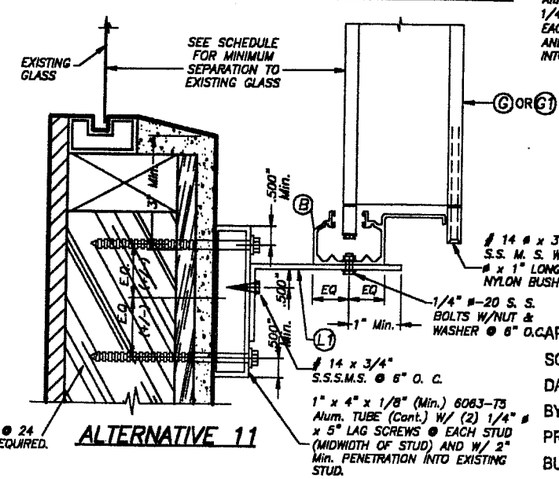


ALTERNATIVE 11

WALL MOUNTING (BUILD-OUT) INSTALLATIONS
SECTIONS C

NOTES:

1. INSTALLATIONS ARE ONLY VALID FOR INSTALLATIONS WITH DESIGN WIND LOADS LESS THAN OR EQUAL TO 75 p.s.f. AND 9'-0" Max. SHUTTER SPAN.
2. FOR NEW WOOD FRAME CONSTRUCTION: WOOD MEMBERS TO BE SOUTHERN PINE No. 2, W/ SPECIFIC DENSITY OF 0.55 OR EQUAL.

NOTE FOR COMBINATION OF SECTIONS:

FLOOR/ WALL/ CEILING MOUNTING SECTIONS CAN BE COMBINED IN ANY WAY TO SUIT ANY INSTALLATION.

# INSTALLATION DETAILS ON EXISTING WOOD BUILDINGS

8/1/01

APPROVED AS COMPLYING WITH THE SOUTH FLORIDA BUILDING CODE
DATE 05/30/2001
BY Helmy A. Melen
PRODUCT CONTROL DIVISION
BUILDING CODE COMPLIANCE OFFICE
ACCEPTANCE NO. 01-0430.03

MIAMI-DADE COUNTY

TILTECO INC.
TILLIT TESTING & ENGINEERING COMPANY
8595 N.W. 38th. St., Ste. 217, VIRGINIA GARDENS, FL. 33166
Phone : (305)871-1530 . Fax : (305)871-1531
EB-0006719
WALTER A. TILLIT Jr. P. E.
FLORIDA Lic. # 44167

ASSA / BIG BERTHA HI-RISE ACCORDION SHUTTER

**PROTECTIVE SHUTTER SYSTEMS, INC.**
(A.S.S.A. # 5)
1631 S. DIXIE HWY. BLDG E-3
POMPANO BEACH, FL. 33060

| REV. No | DESCRIPTION | DATE | REV. No | DESCRIPTION | DATE |
|---|---|---|---|---|---|
| 1 | | | 3 | | |
| 2 | | | 4 | | |

| | |
|---|---|
| AS SHOWN | SCALE |
| 2/27/01 | DATE |
| 01-041 | DRAWING No |
| SHEET 10 OF 10 | |