MIAMI-DADE COUNTY, FLORIDA
METRO-DADE FLAGLER BUILDING

BUILDING CODE COMPLIANCE OFFICE
METRO-DADE FLAGLER BUILDING
140 WEST FLAGLER STREET, SUITE 1603
MIAMI, FLORIDA 33130-1563
(305) 375-2901 FAX (305) 375-2908

CONTRACTOR LICENSING SECTION
(305) 375-2527 FAX (305) 375-2558

CONTRACTOR ENFORCEMENT DIVISION
(305) 375-2966 FAX (305) 375-2908

PRODUCT CONTROL DIVISION
(305) 375-2902 FAX (305) 372-6339

PRODUCT CONTROL NOTICE OF ACCEPTANCE

Extech/Exterior Technologies, Inc.
200 Bridge Street
Pittsburgh ,PA 15223

Your application for Notice of Acceptance (NOA) of:
Series "Protechtor 3200 / 3200C" Aluminum Fixed Window System
under Chapter 8 of the Code of Miami-Dade County governing the use of Alternate Materials and Types of Construction, and completely described herein, has been recommended for acceptance by the Miami-Dade County Building Code Compliance Office (BCCO) under the conditions specified herein.

This NOA shall not be valid after the expiration date stated below. BCCO reserves the right to secure this product or material at any time from a jobsite or manufacturer's plant for quality control testing. If this product or material fails to perform in the approved manner, BCCO may revoke, modify, or suspend the use of such product or material immediately. BCCO reserves the right to revoke this approval, if it is determined by BCCO that this product or material fails to meet the requirements of the South Florida Building Code.

The expense of such testing will be incurred by the manufacturer.

ACCEPTANCE NO.: 01-0502.11
EXPIRES: 07/31/2006

Raul Rodriguez
Chief Product Control Division

THIS IS THE COVERSHEET, SEE ADDITIONAL PAGES FOR SPECIFIC AND GENERAL CONDITIONS
BUILDING CODE & PRODUCT REVIEW COMMITTEE

This application for Product Approval has been reviewed by the BCCO and approved by the Building Code and Product Review Committee to be used in Miami-Dade County, Florida under the conditions set forth above.

Francisco J. Quintana, R.A.
Director
Miami-Dade County
Building Code Compliance Office

APPROVED: 07/12/2001

Extech/Exterior Technologies, Inc.

ACCEPTANCE No. : 01-0502.11

APPROVED : JUL 12 2001

EXPIRES : July 31, 2006

NOTICE OF ACCEPTANCE: SPECIFIC CONDITIONS

1. SCOPE

1.1 This **renews** the notice of Acceptance No. 98-0624.01 which was issued on November 19, 1998. It approves an aluminum fixed window system, as described in Section 2 of this Notice of Acceptance, designed to comply with the South Florida Building Code, 1994 Edition for Miami-Dade County, for the locations where the pressure requirements, as determined by SFBC Chapter 23, do not exceed the Design Pressure Rating values indicated in the approved drawings.

2. PRODUCT DESCRIPTION

2.1 The **Series "Protechtor 3200/3200C" Aluminum Fixed Window System** and its components shall be constructed in strict compliance with the following documents: Drawing No. **W98-74**, Sheets 1 through 3 of 3, titled "Series 3200/3200C Alum Fixed Window", prepared by Al-Farooq Corporation, dated 09/15/98, signed and sealed by Humayoun Farooq, P.E., bearing the Miami-Dade County Product Control Approval stamp with the Notice of Acceptance number and approval date by the Miami-Dade County Product Control Division. These documents shall hereinafter be referred to as the approved drawings.

3. LIMITATIONS

3.1 This approval applies to single unit applications only, as shown in approved drawings.

4. INSTALLATION

4.1 The aluminum fixed window system and its components shall be installed in strict compliance with the approved drawings.

4.2 The installation of this product **will not require** a hurricane protection system.

5. LABELING

5.1 Each panel shall bear a permanent label with the manufacturer's name or logo, city, state and following statement: "Miami-Dade County Product Control Approved".

6. BUILDING PERMIT REQUIREMENTS

6.1 Application for building permit shall be accompanied by copies of the following:

6.1.1 This Notice of Acceptance.

6.1.2 Duplicate copies of the approved drawings, as identified in Section 2 of this Notice of Acceptance, clearly marked to show the components selected for the proposed installation.

6.1.3 Any other documents required by the Building Official or the South Florida Building Code (SFBC) in order to properly evaluate the installation of this system.

Manuel Perez, P.E., Product Control Examiner
Product Control Division

Extech/Exterior Technologies, Inc.

ACCEPTANCE No. : 01-0502.11

APPROVED : JUL 1 2 2001

EXPIRES : July 31, 2006

NOTICE OF ACCEPTANCE: STANDARD CONDITIONS

1 Renewal of this Acceptance (approval) shall be considered after a renewal application has been filed and the original submitted documents, including test-supporting data, engineering documents, are no older than eight (8) years.

2. Any and all approved products shall be permanently labeled with the manufacturer's name, city, state, and the following statement: "Miami-Dade County Product Control Approval", or as specifically stated in the specific conditions of this Acceptance.

3. Renewals of Acceptance will not be considered if:
   a. There has been a change in the South Florida Building Code affecting the evaluation of this product and the product is not in compliance with the code changes.
   b. The product is no longer the same product (identical) as the one originally approved.
   c. If the Acceptance holder has not complied with all the requirements of this acceptance, including the correct installation of the product.
   d. The engineer who originally prepared, signed and sealed the required documentation initially submitted, is no longer practicing the engineering profession.

4. Any revision or change in the materials, use, and/or manufacture of the product or process shall automatically be cause for termination of this Acceptance, unless prior written approval has been requested (through the filing of a revision application with appropriate fee) and granted by this office.

5. Any of the following shall also be grounds for removal of this Acceptance:
   a. Unsatisfactory performance of this product or process.
   b. Misuse of this Acceptance as an endorsement of any product, for sales, advertising or any other purposes.

6. The Notice of Acceptance number preceded by the words Miami-Dade County, Florida, and followed by the expiration date may be displayed in advertising literature. If any portion of the Notice of Acceptance is displayed, then it shall be done in its entirety.

7. A copy of this Acceptance as well as approved drawings and other documents, where it applies, shall be provided to the user by the manufacturer or its distributors and shall be available for inspection at the job site at all time. The engineer need not reseal the copies.

8. Failure to comply with any section of this Acceptance shall be cause for termination and removal of Acceptance.

9. This Notice of Acceptance consists of pages 1, 2 and this last page 3.

END OF THIS ACCEPTANCE

Manuel Perez

Manuel Perez, P.E., Product Control Examiner
Product Control Division

Extech/Exterior Technologies, Inc.

ACCEPTANCE No. : **01-0502.11**

APPROVED : JUL 12 2001

EXPIRES : **July 31, 2006**

NOTICE OF ACCEPTANCE: STANDARD CONDITIONS

A. DRAWINGS

1. Manufacturer's die drawings and sections.
2. Drawing No. **W98-74**, Sheets 1 through 3 of 3, titled "Series 3200/3200C Alum Fixed Window", prepared by Al-Farooq Corporation, dated 09/15/98, signed and sealed by Humayoun Farooq, P.E.

B. TESTS

1. Test report on : 1) Air Infiltration Test, per PA 202-94
   2) Uniform Static Air Pressure Test, Loading per PA 202-94
   3) Water Resistance Test, per PA 202-94
   along with installation diagram of an aluminum fixed window, prepared by National Certified Testing Laboratories, Report No. **NCTL 210-1623-1**, dated June 7, 1994, signed and sealed by Barry Portnoy, P.E.
2. Test report on : 4) Large Missile Impact Test, SFBC PA 201-94
   5) Cyclic Loading Test, per SFBC PA 203-94
   along with installation diagram of an aluminum fixed window, prepared by American Test Lab of South Florida, Report No. **ATL 94-0617.01**, dated June 8, 1994, signed and sealed by Gary Elzweig, P.E.

C. CALCULATIONS

1. Anchor Calculations and structural analysis, prepared by Al Farooq Corporation, dated 10/06/98, signed and sealed by Humayoun Farooq, P.E.

D. MATERIAL CERTIFICATIONS

1. None.

E. STATEMENTS

1. Letter by Al-Farooq Corporation, stating that Mr. Humayoun Farooq is still in the engineering practice, dated 4/24/01.
2. Letter by Al-Farooq Corporation, stating that the submitted drawings comply with the applicable sections of the South Florida Building Code, dated October 12, 1998.
3. Letter by Al-Farooq Corporation, stating that they have no financial interest with the laboratory that performed the tests or the engineer who witnessed the tests, dated October 12, 1998.
4. Letter from Extech stating that the product has not changed since it was originally approved, dated 4/24/01, signed by Alan D. Lohr.
5. Notice of Acceptance No. **97-0403.01**, issued to General Electric Plastics for their "Lexan Polycarbonate Plastic Sheets", approved on 07/17/97 and expiring on 07/17/00.

F. OTHER

1. Notice of Acceptance No. **98-0624.01**, issued to Extech/Exterior Technologies, Inc. for the 3200/3200C Aluminum Fixed Window, approved on 11/19/98 and expiring on 7/31/01.

Manuel Perez, P.E., Product Control Examiner
Product Control Division

DESIGN LOAD CAPACITY – PSF			
WINDOW DIMS.		3/8" LEXAN	
WIDTH	HEIGHT	EXT.	INT.
24"	24"	100.0	212.5
	30"	100.0	212.5
	36"	100.0	212.5
	42"	100.0	202.8
	48"	100.0	193.2
	54"	100.0	186.3
	60"	100.0	181.1
	66"	100.0	177.1
	72"	100.0	173.8
	78"	100.0	171.2
	84"	100.0	169.0
	90"	100.0	167.2
	96"	100.0	165.6
36"	24"	100.0	212.5
	30"	100.0	170.0
	36"	100.0	141.7
	42"	100.0	141.7
	48"	100.0	141.7
	54"	100.0	141.7
	60"	100.0	138.0
	66"	100.0	132.8
	72"	100.0	128.8
	78"	100.0	125.6
	84"	100.0	122.9
	90"	100.0	120.7
	96"	100.0	118.9
48"	24"	100.0	193.2
	30"	100.0	168.6
	36"	100.0	141.7
	42"	100.0	121.4
	48"	100.0	106.2
	54"	100.0	106.2
	60"	100.0	106.2
	66"	100.0	106.2
	72"	100.0	106.2
	78"	100.0	106.2
	84"	100.0	104.6
	96"	100.0	101.4
54"	24"	100.0	186.3
	30"	100.0	160.5
	36"	100.0	141.7
	42"	100.0	121.4
	48"	100.0	106.2
	54"	94.4	94.4
	60"	94.4	94.4
	66"	94.4	94.4
	72"	94.4	94.4

DESIGN LOAD CAPACITY – PSF			
WINDOW DIMS.		3/8" LEXAN	
WIDTH	HEIGHT	EXT.	INT.
60"	24"	100.0	181.1
	30"	100.0	154.5
	36"	100.0	138.0
	42"	100.0	121.4
	48"	100.0	106.2
	54"	94.4	94.4
	60"	85.0	85.0
	66"	85.0	85.0
66"	24"	100.0	177.1
	30"	100.0	150.0
	36"	100.0	132.8
	42"	100.0	121.4
	48"	100.0	106.2
	54"	94.4	94.4
	60"	85.0	85.0
72"	24"	100.0	173.8
	30"	100.0	146.4
	36"	100.0	128.8
	42"	100.0	116.9
	48"	100.0	106.2
	54"	94.4	94.4
84"	24"	100.0	169.0
	30"	100.0	141.1
	36"	100.0	122.9
	42"	100.0	110.4
	48"	100.0	101.4
96"	24"	100.0	165.6
	30"	100.0	137.4
	36"	100.0	118.9
	42"	100.0	106.0

TESTS PERFORMED:

NCTL–210–1623–1 DATED 07–14–94
TEST SIZE = 51" X 80–1/8" (O)
DESIGN LOADS = +100.0, –100.0 PSF (PA202)
WATER INFILTRATION TEST = 15 PSF

ATL–94–0617.02 DATED 07–19–94
TEST SIZE = 50" X 80" (O)
DESIGN LOADS = +100.0, –100.0 PSF (PA201 & 203)

ATL–0218.01–95 DATED 02–19–95
TEST SIZE = 42" X 31–1/4" (O)
DESIGN LOADS = +325.0, –325.0 PSF (PA201 & 203)

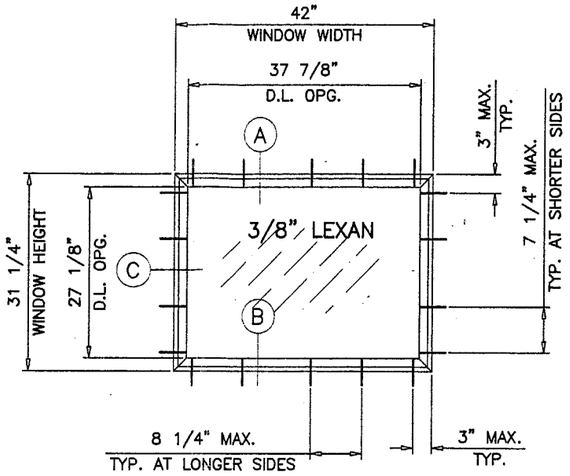

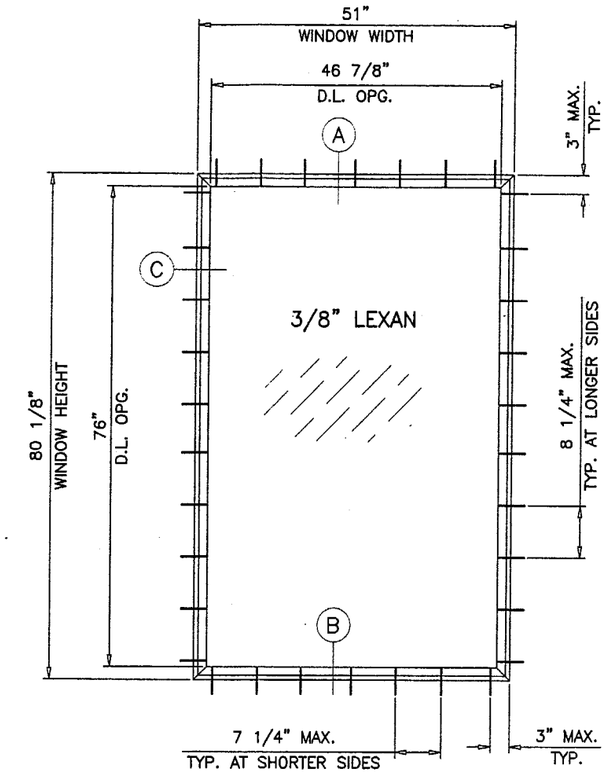

TYPICAL ELEVATIONS
TESTED UNITS

PRODUCT RENEWED
ACCEPTANCE No. 01-0502.11
EXPIRATION DATE JUL 31 2006
By Manuel Perez
PRODUCT CONTROL DIVISION
BUILDING CODE COMPLIANCE OFFICE

NOTES:

1. THIS STRUCTURE IS DESIGNED AS PER THE SOUTH FLORIDA BUILDING CODE 1994 EDITION FOR DADE COUNTY. ALSO FOR WIND LOADS AS PER ASCE 7–88 USING CORRESPONDING LOADS.
2. WOOD BUCKS BY OTHERS, MUST BE ANCHORED PROPERLY TO TRANSFER LOADS TO THE STRUCTURE.
3. ANCHORS SHALL BE AS LISTED, SPACED AS SHOWN ON DETAILS. ANCHOR EMBEDMENT TO BASE MATERIAL SHALL BE BEYOND WALL DRESSING OR STUCCO.
4. WINDOW CAN BE USED AS A PRIMARY UNIT, AS WELL AS AN OVERGLAZING OR INNERGLAZING.

IMPACT RESISTANT WINDOWS SHUTTERS NOT REQUIRED

Engr: DR. HUMAYOUN FAROOQ
STRUCTURES
FLA. PE # 16557
OCT 12 1998

APPROVED AS COMPLYING WITH THE SOUTH FLORIDA BUILDING CODE
DATE November 19, 1998
BY Manuel Perez
PRODUCT CONTROL DIVISION
BUILDING CODE COMPLIANCE OFFICE
ACCEPTANCE NO. 98-0624.01

AL–FAROOQ CORPORATION
ENGINEERS, PLANNERS & PRODUCT DESIGN
1235 SW 87 AVE
MIAMI, FLORIDA 33174
TEL. (305) 264–8100 FAX. (305) 262–6978

COMP–ANL\W98–74EX

SERIES 3200/3200C ALUM FIXED WINDOW

EXTECH/EXTERIOR TECHNOLOGIES INC.
200 BRIDGE STREET
PITTSBURGH, PA 15223
TEL. (412) 781–0991 FAX (412) 781–9303

revisions:

no	date	by	description

date: 09–15–98
scale: 1/2" = 1"
dr. by: HAMID
chk. by:

drawing no. W98–74

WOOD BUCKS NOT BY EXTECH, MUST SUSTAIN LOADS IMPOSED BY GLAZING SYSTEM AND TRANSFER THEM TO THE BUILDING STRUCTURE.

TYPICAL ANCHORS: SEE ELEV. FOR SPACING

INTO 2BY WOOD BUCKS OR WOOD STRUCTURE
12 SS SMS WITH 1-1/2" MIN. EMBED INTO WOOD

THRU 1BY WOOD BUCKS INTO MASONRY OR DIRECTLY INTO MASONRY
3/16" ITW TAPCONS WITH 1-1/4" MIN. EMBED INTO MASONRY

INTO STEEL OR METAL STRUCTURES (1/8" MIN. THICKNESS)
12 SS SMS OR TEKS SCREWS

GLAZING BITE: 1" MIN. TYPICAL

PRODUCT RENEWED
ACCEPTANCE No. 01-0502.11
EXPIRATION DATE JUL 3 1 2006
By Manuel Perez
PRODUCT CONTROL DIVISION
BUILDING CODE COMPLIANCE OFFICE

EXTERIOR

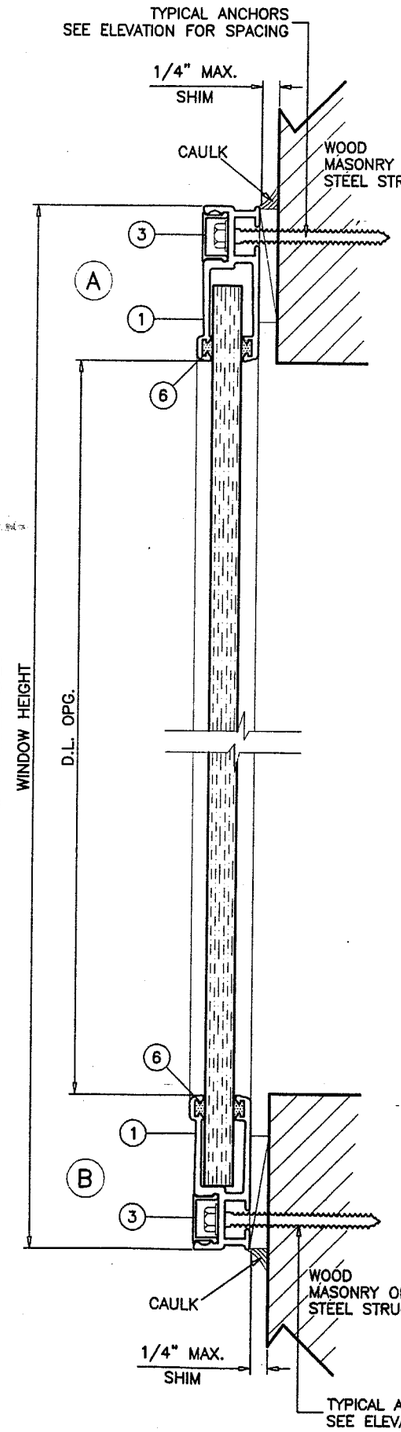

SERIES-3200C

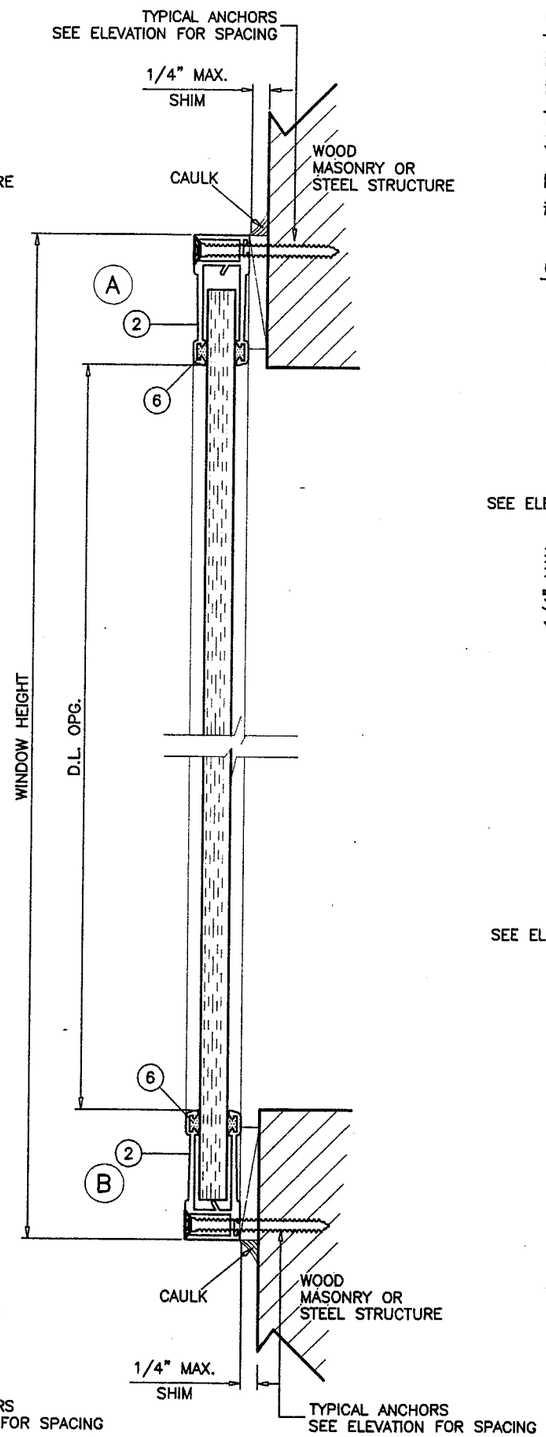

SERIES-3200

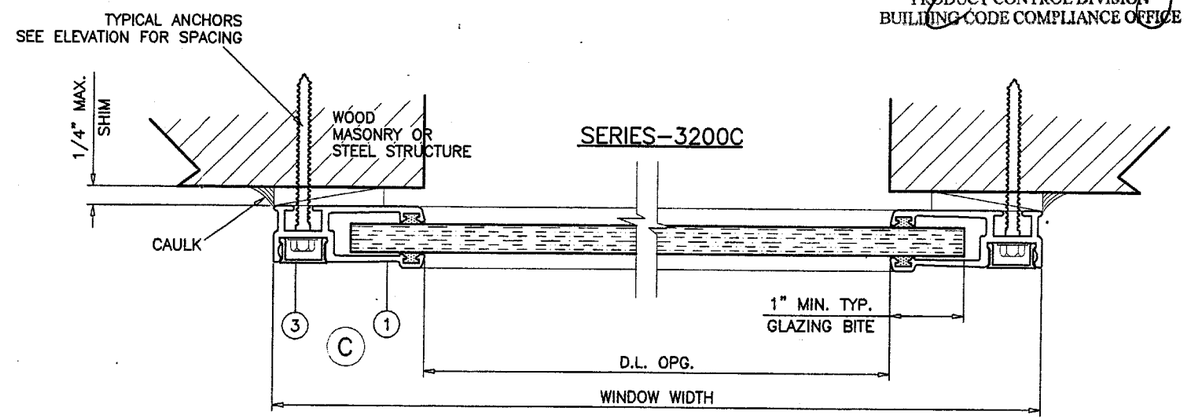

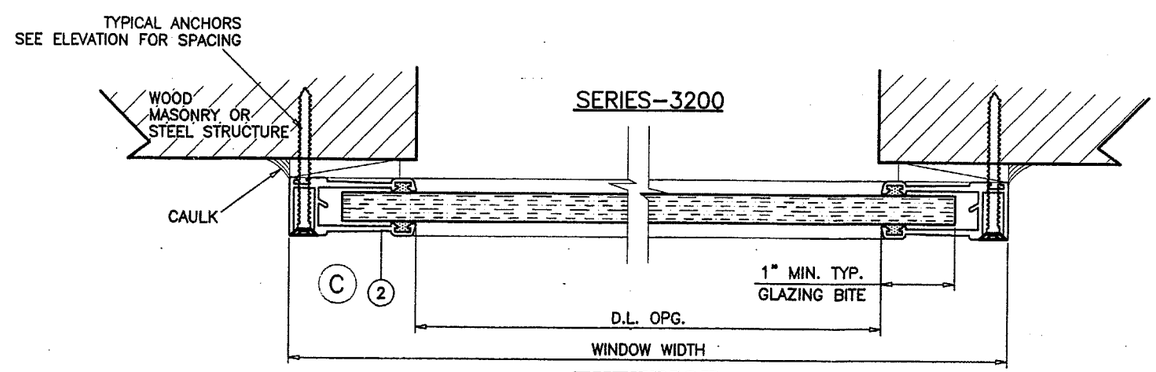

EXTERIOR

Engr: DR. HUMAYOUN FAROOQ
STRUCTURES
FLA. PE # 16557
OCT 1 2 1998

APPROVED AS COMPLYING WITH THE SOUTH FLORIDA BUILDING CODE
DATE November 19 1998
BY Manuel Perez
PRODUCT CONTROL DIVISION
BUILDING CODE COMPLIANCE OFFICE
ACCEPTANCE NO. 98-0624.01

AL-FAROOQ CORPORATION
ENGINEERS, PLANNERS & PRODUCT DESIGN
1235 SW 87 AVE
MIAMI, FLORIDA 33174
TEL. (305) 264-8100 FAX. (305) 262-6978
COMP-ANL\W98-74EX

SERIES 3200/3200C ALUM FIXED WINDOW

EXTECH/EXTERIOR TECHNOLOGIES INC.
200 BRIDGE STREET
PITTSBURGH, PA 15223
TEL. (412) 781-0991 FAX (412) 781-9303

revisions:

no	date	by	description

date: 09-15-98
scale: 1/2" = 1"
dr. by: HAMID
chk. by:

drawing no.
W98-74

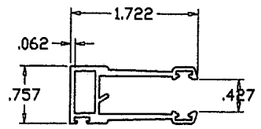

FRAME 3200 SERIES

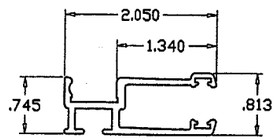

FRAME 3200C SERIES

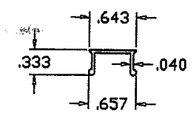

SNAP-IN COVER

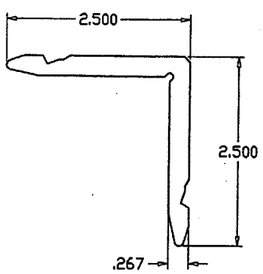

CORNER KEY
S-3200

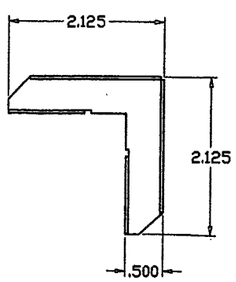

CORNER KEY
S-3200C

ITEM #	PART #	REQD.	DESCRIPTION	MATERIAL	MANF./SUPPLIER/REMARKS
1	S-22264	4	FRAME FOR 3200C	6105-T6	KEYMARK
2	H-4528	4	FRAME FOR 3200	6063-T5	KEYMARK
3	S-22421	4	SNAP COVER	6063-T5	KEYMARK
4	S-16058	1/ CORNER	CORNER KEY 3200 SERIES	6063-T5	KEYMARK
5	61-11	1/ CORNER	CORNER KEY 3200C SERIES	5005-H16	STRY-BUC IND.
6	Q-200X190	2 ROWS	GASKET WEATHERSEAL	-	SCHLEGEL CORP.

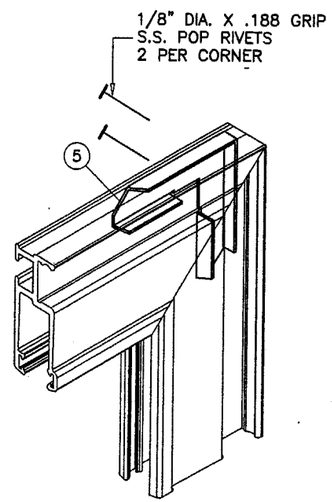

CORNER ASSEMBLY
SERIES 3200C

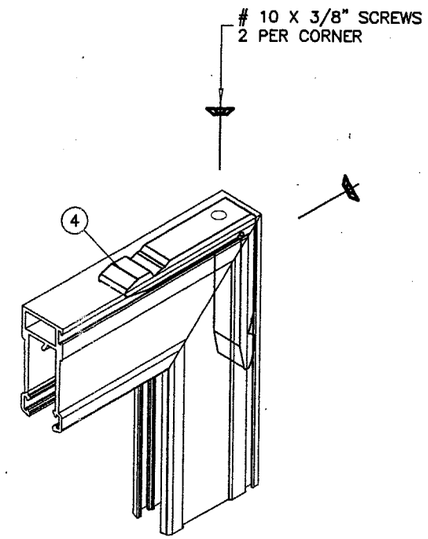

CORNER ASSEMBLY
SERIES 3200

FRAME CORNERS TO BE SEALED WITH ADHESIVE SEALANT

Engr: DR. HUMAYOUN FAROOQ
STRUCTURES
FLA. PE # 16557

OCT 12 1998

PRODUCT RENEWED

ACCEPTANCE No. 01-0502.11

EXPIRATION DATE JUL 31 2006

By Manuel Perez
PRODUCT CONTROL DIVISION
BUILDING CODE COMPLIANCE OFFICE

APPROVED AS COMPLYING WITH THE
SOUTH FLORIDA BUILDING CODE
DATE November 19 1998
BY Manuel Perez
PRODUCT CONTROL DIVISION
BUILDING CODE COMPLIANCE OFFICE
ACCEPTANCE NO. 98-0624.01

AL-FAROOQ CORPORATION
ENGINEERS, PLANNERS & PRODUCT DESIGN
1235 SW 87 AVE
MIAMI, FLORIDA 33174
TEL (305) 264-8100 FAX. (305) 262-6978

COMP-ANL\W98-74EX

SERIES 3200/3200C ALUM FIXED WINDOW

EXTECH/EXTERIOR TECHNOLOGIES INC.
200 BRIDGE STREET
PITTSBURGH, PA 15223
TEL. (412) 781-0991 FAX (412) 781-9303

revisions:

no	date	by	description

date: 09-15-98
scale: 1/2" = 1"
dr. by: HAMID
chk. by:

drawing no.
W98-74

sheet 3 of 3