MIAMI-DADE

**MIAMI-DADE** COUNTY, FLORIDA
METRO-DADE FLAGLER BUILDING

**BUILDING CODE COMPLIANCE OFFICE**
METRO-DADE FLAGLER BUILDING
140 WEST FLAGLER STREET, SUITE 1603
MIAMI, FLORIDA 33130-1563
(305) 375-2901 FAX (305) 375-2908

**CONTRACTOR LICENSING SECTION**
(305) 375-2527 FAX (305) 375-2558

**CONTRACTOR ENFORCEMENT DIVISION**
(305) 375-2966 FAX (305) 375-2908

**PRODUCT CONTROL DIVISION**
(305) 375-2902 FAX (305) 372-6339

# PRODUCT CONTROL NOTICE OF ACCEPTANCE

**Alutech United, Inc.**
**15 Dixon Street**
**Shelbyville ,DE 19975**

Your application for Notice of Acceptance (NOA) of:
**RE-1000**
under Chapter 8 of the Code of Miami-Dade County governing the use of Alternate Materials and Types of Construction, and completely described herein, has been recommended for acceptance by the Miami-Dade County Building Code Compliance Office (BCCO) under the conditions specified herein.

This NOA shall not be valid after the expiration date stated below. BCCO reserves the right to secure this product or material at any time from a jobsite or manufacturer's plant for quality control testing. If this product or material fails to perform in the approved manner, BCCO may revoke, modify, or suspend the use of such product or material immediately. BCCO reserves the right to revoke this approval, if it is determined by BCCO that this product or material fails to meet the requirements of the South Florida Building Code.

The expense of such testing will be incurred by the manufacturer.

**ACCEPTANCE NO.: 01-0507.01**
**EXPIRES: 10/18/2006**

Raul Rodriguez
Chief Product Control Division

**THIS IS THE COVERSHEET, SEE ADDITIONAL PAGES FOR SPECIFIC AND GENERAL CONDITIONS**
**BUILDING CODE & PRODUCT REVIEW COMMITTEE**

This application for Product Approval has been reviewed by the BCCO and approved by the Building Code and Product Review Committee to be used in Miami-Dade County, Florida under the conditions set forth above.

Francisco J. Quintana, R.A.
Director
Miami-Dade County
Building Code Compliance Office

**APPROVED: 10/18/2001**

**Alutech United, Inc.**

**ACCEPTANCE NO: 01-0507.01**

**APPROVED: OCT 1 8 2001**

**EXPIRES: OCT 1 8 2006**

## NOTICE OF ACCEPTANCE: SPECIFIC CONDITIONS

**1 SCOPE:**

**1.1** This approves an extruded aluminum roll-up type shutter, as described in Section 2 of this Notice of Acceptance, designed to comply with the South Florida Building Code, (S.F.B.C.) 1994 Edition for Miami-Dade County. For the locations where the pressure requirements, as determined by S.F.B.C. Chapter 23, do not exceed the design pressure-rating values indicated in the approved drawings.

**2 PRODUCT DESCRIPTION:**

**2.1** The **RE 1000 Roll-Up Shutter** and its components shall be constructed in strict compliance with the following documents: Drawing No. **01-060R**, Sheets 1 through 14 of 14, titled "RE 1000 Extruded Aluminum Roll Shutters", prepared by EngCo, Inc., dated 08/05/01, with no revisions. It is signed and sealed by Pedro De Figueiredo PE. bearing the Miami-Dade County Product Control approval stamp with the Notice of Acceptance number and approval date. These documents shall herein after be referred to as the approved drawings.

**3 LIMITATIONS:**

**3.1** All permanent set components, included but not limited to embedded anchor bolts, metal shields, headers and sills, must be protected against corrosion, damage and contamination at all times.

**3.2** Minimum separation from interior storm bar to existing glass shall be as shown on sheet 3 of 14".

**3.3** Minimum slat engagement inside of sidetrack shall be 1-1/4".

**3.4** Slat orientation shall be concave side to the exterior.

**4 INSTALLATION:**

**4.1** The extruded aluminum roll-up shutter and its component shall be installed in strict compliance with the approved drawing

**5 LABELING:**

**5.1** Each unit shall bear a permanent label with the manufacturer's name or logo, city, state and the following statement: "Miami-Dade County Product Control Approved"

**6 BUILDING PERMIT REQUIREMENTS:**

**6.1** Application for Building Permit shall be accompanied by copies of the following:

**6.1.1** This Notice of Acceptance

**6.1.2** Duplicate copies of the approved drawings, as identified in Section 2 of this Notice of Acceptance, clearly marked to show the components selected for the proposed installation.

**6.1.3** Any other document required by the Building Official or the South Florida Building Code in order to evaluate the installation of this system.

Candido Font, PE. Sr. Product Control Examiner
Product Control Division

**Alutech United, Inc.**

**ACCEPTANCE NO: 01-0507.01**

**APPROVED: OCT 1 8 2001**

**EXPIRES: OCT 1 8 2006**

## NOTICE OF ACCEPTANCE: STANDARD CONDITIONS

1 Renewal of this Acceptance (approval) shall be considered after a renewal application has been filed and the original submitted documents, including test-supporting data, engineering documents, are no older than eight (8) years.

2. Any and all approved products shall be permanently labeled with the manufacturer's name, city, state, and the following statement: "Miami-Dade County Product Control Approval", or as specifically stated in the specific conditions of this Acceptance.

3. Renewals of Acceptance will not be considered if:
   a. There has been a change in the South Florida Building Code affecting the evaluation of this product and the product is not in compliance with the code changes.
   b. The product is no longer the same product (identical) as the one originally approved.
   c. If the Acceptance holder has not complied with all the requirements of this acceptance, including the correct installation of the product.
   d. The engineer who originally prepared, signed and sealed the required documentation initially submitted, is no longer practicing the engineering profession.

4. Any revision or change in the materials, use, and/or manufacture of the product or process shall automatically be cause for termination of this Acceptance, unless prior written approval has been requested (through the filing of a revision application with appropriate fee) and granted by this office.

5. Any of the following shall also be grounds for removal of this Acceptance:
   a. Unsatisfactory performance of this product or process.
   b. Misuse of this Acceptance as an endorsement of any product, for sales, advertising or any other purposes.

6. The Notice of Acceptance number preceded by the words Miami-Dade County, Florida, and followed by the expiration date may be displayed in advertising literature. If any portion of the Notice of Acceptance is displayed, then it shall be done in its entirety.

7. A copy of this Acceptance as well as approved drawings and other documents, where it applies, shall be provided to the user by the manufacturer or its distributors and shall be available for inspection at the job site at all time. The engineer need not reseal the copies.

8. Failure to comply with any section of this Acceptance shall be cause for termination and removal of Acceptance.

9. This Notice of Acceptance consists of pages 1, 2 and this last page 3.

Candido Font, PE. Sr. Product Control Examiner
Product Control Division

**END OF THIS ACCEPTANCE**

**Alutech United, Inc.**

**ACCEPTANCE NO: 01-0507.01**

**APPROVED: OCT 1 8 2001**

**EXPIRES: OCT 1 8 2006**

**NOTICE OF ACCEPTANCE: EVIDENCE SUBMITTED:**

**A. DRAWING**

1. Drawing No. 01-060R, titled "RE 1000 Extruded Aluminum Roll Shutters", Sheets 1 through 14 of 14, prepared by EngCo, Inc., dated 08/05/01, with no revisions, signed and sealed by P. D. Figueiredo, PE.

**B. TEST**

1. Test report on Large Missile Impact Test per PA 201 and Cyclic Wind Pressure Test per PA 203, of "Roll shutter RE 1000 Series" prepared by Hurricane Engineering & Testing, Inc., Report No. **HETI 00-951**, dated 11/09/2000, signed and sealed by H. M. Medina, PE.
2. Test report on Uniform Static Air Pressure Test per PA 202 & Force Entry Resistance Test per SFBC Section 3603.2(b)3 of "Roll shutter RE 1000 Series" prepared by Hurricane Engineering & Testing, Inc., Report No. **HETI 00-950**, dated 11/09/00, signed and sealed by H. M. Medina PE.
3. Test report on Large Missile Impact Test per PA 201 of "Roll shutter RE 1000 Series", prepared by Hurricane Engineering & Testing, Inc., Report No. **HETI 00-954**, dated 11/21/00, signed and sealed by H. M. Medina, PE.
4. Test report on Large Missile Impact Test per PA 201 of "Roll shutter storm bars RE 1000 Series", prepared by Hurricane Engineering & Testing, Inc., Report No.**HETI 01-973**, dated 01/30/01, signed and sealed by H. M. Medina, PE.

**C. CALCULATIONS**

1. Comparative analysis for slats; storm bars, headers and anchors using rational analysis dated 02/17/01, Section B pages 1 through 11, Section C pages 1 through 11, Section D pages 1 & and Section E pages 1 through 4, prepared by Engco, Inc., signed and sealed by P. D. Figueiredo, PE.
2. Revised calculations prepared by Engco, Inc. on 07/25/01

**D. MATERIAL CERTIFICATION**

1. Tensile Test Report No. **HETI 01-T005**, per ASTM E8, Hurricane Engineering & Testing, Inc., dated 03/08/01, signed and sealed by H. M. Medina, PE.

**E. STATEMENTS**

1. Letter of Code Compliance issued by Engco, Inc., on 04/20/2001 and signed by P. D. Figueiredo, PE.
2. No-financial interest letter issued by Alutech United, Inc. on 04/03/2001, and signed by G. Pfaller.

Candido Font, PE. Sr. Product Control Examiner
Product Control Division

# ROLL SHUTTER RE 1000

## GENERAL NOTES:

1- DEFINITION: This product is an aluminum rolling type shutter, designed, constructed and erected to easily enclose an area, providing protection from Hurricane force winds within the allowable designed pressures and limitation stated in this approval.

2- CODE: This product has been tested and designed in accordance with the South Florida Building Code, 1994 Dade County Edition, under Chapters 23 and 35.

3- POSTING: A permanent legible decal shall be placed at readily visible location reading the following:

"RE 1000 SERIES ROLL SHUTTER
ALUTECH UNITED INC.
SELBYVILLE - DE
DADE COUNTY PRODUCT CONTROL APPROVED"

4- LOADS: Each installation must meet the design load calculated by a professional Engineer. The designed load MUST comply with chapter 23 (SFBC - Section 2309) and ASCE 7-88 (Section 6). Basic wind speed = 110 mph.

5- MATERIAL: All aluminum structure and components shall be designed as per section 30 of the SFBC. Shutter aluminum extruded shapes shall be 6063-T5 or as noted. Tubular shapes used as storm bars, headers and mullions shall be 6063-T6.

6- FASTENERS: Assembly screws and anchors shall be as specified at current set of drawings. Installation and loads as per this approval.

## INDEX:


SHEET 1 of 14 - COVER SHEET, INDEX, GENERAL NOTES
SHEET 2 of 14 - SHUTTER COMPONENTS
SHEET 3 of 14 - SLATS WINDLOAD & DEFLECTIONS (TABLES 1.3, 2.3, 3.3)
SHEET 4 of 14 - GUIDE RAILS MOUNTING OPTIONS
SHEET 5 of 14 - STORM BARS SELECTION & DEFLECTION TABLE
SHEET 6 of 14 - STORM BARS SELECTION & DEFLECTION TABLE
SHEET 7 of 14 - STORM BARS ANCHORING TABLES
SHEET 8 of 14 - HEADER SELECTION & DEFLECTION TABLES
SHEET 9 of 14 - HEADER SELECTION & DEFLECTION TABLES
SHEET 10 of 14 - HEADER ANCHORING TABLES
SHEET 11 of 14 - MULLION SELECTION TABLE
SHEET 12 of 14 - MULLION ANCHORING TABLES
SHEET 13 of 14 - HOOD ASSEMBLY
SHEET 14 of 14 - COMBINED DEFLECTION ON MULTIPLE SPANS SHUTTERS



Manufacturer:
Alutech United, Inc
15 DIXON STREET
SELBYVILLE, DE 19975
Tel.: (302) 854-9100


Product:
RE1000
EXTRUDED ALUMINUM ROLL SHUTTERS


Engineering:
EngCo Inc.
CA 8116
6971 W. Sunrise Blvd. 104
Plantation, Fl. 33313
Tel.: (954) 585-0304


SEP 2 0 2001

Engineer Seal
Pedro De Figueiredo
PE 52609

Date: 8/5/01
Scale: 1:1
Design by: PPMF

Dade County NOA:
APPROVED AS COMPLYING WITH THE SOUTH FLORIDA BUILDING CODE
DATE 10/18/2001
BY
PRODUCT CONTROL DIVISION
BUILDING CODE COMPLIANCE OFFICE
ACCEPTANCE NO. 01-0507.01

Drawing Number
01-060R

# SHUTTER COMPONENTS

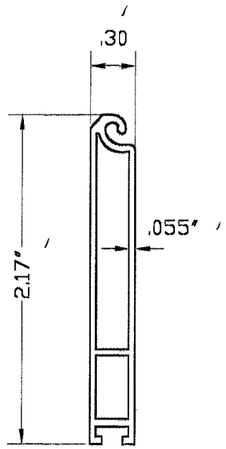


BAS*AT1 - End Slat
6063-T5

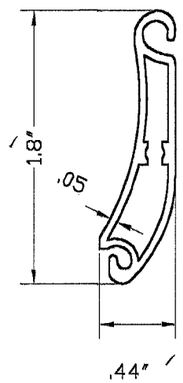


RE 1000 - Female Slat
6063-T5

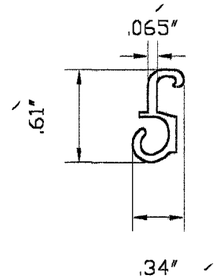


RE 1000 - Male Slat
6063-T5

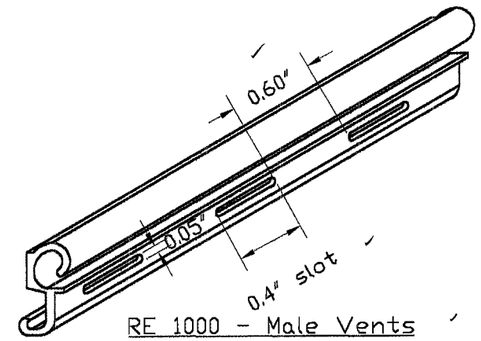


RE 1000 - Male Vents

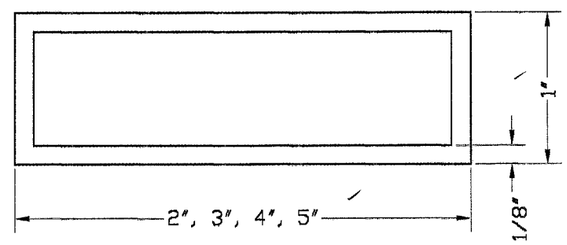


Std 1x Aluminum Tube
6063-T6

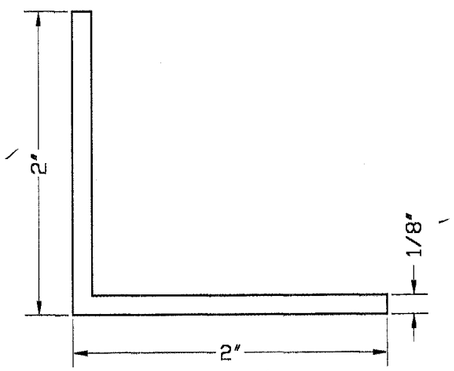


Std 2x2 Aluminum Angle
6063-T6

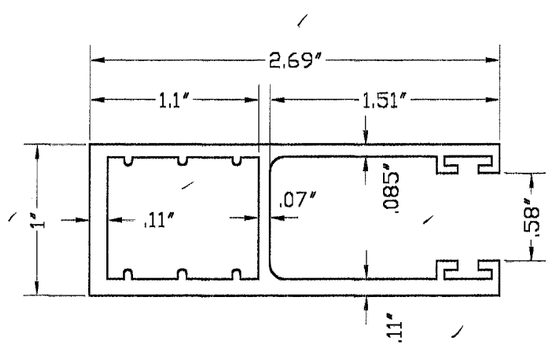


GUI*HSU - Guide Rail
6063-T5

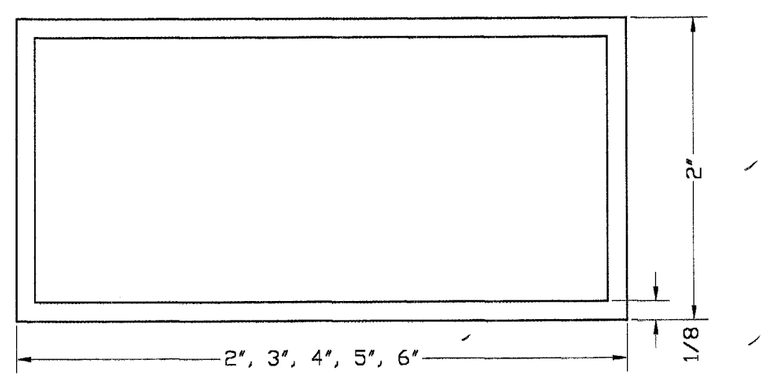


Std 2x Aluminum Tube
6063-T6


Manufacturer:
Alutech United, Inc
15 DIXON STREET
SELBYVILLE, DE 19975
Tel.: (302) 854-9100


Product:
RE1000
EXTRUDED ALUMINUM ROLL SHUTTERS


Engineering:
EngCo Inc.
CA 8116
6971 W. Sunrise Blvd. 104
Plantation, Fl. 33313
Tel.: (954) 585-0304


SEP 2 0 2001

Engineer Seal
Pedro De Figueiredo
PE 52609

Date: 8/5/01
Scale: 1:1
Design by: PPMF

Dade County NOA:
APPROVED AS COMPLYING WITH THE SOUTH FLORIDA BUILDING CODE
DATE 10/18/2001
BY
PRODUCT CONTROL DIVISION
BUILDING CODE COMPLIANCE OFFICE
ACCEPTANCE NO. 01-0507.01

Drawing Number
01-060R

# SLATS WINDLOAD DESIGN TABLES

TABLE 1.3
MAXIMUM INSIDE TRACK (TT)
RE 1000 SHUTTER SLAT

| PD | 1 SPAN | 2 SPAN | 3 SPAN |
|---|---|---|---|
| 30 | 65 | 133 | 200 |
| 45 | 58 | 133 | 200 |
| 55 | 54 | 133 | 196 |
| 65 | 51 | 133 | 188 |
| 75 | 49 | 128 | 181 |
| 85 | 47 | 120 | 174 |
| 95 | 45 | 114 | 168 |
| 105 | 44 | 108 | 162 |
| 115 | 43 | 103 | 157 |
| 125 | 41 | 99 | 153 |
| 135 | 40 | 95 | 149 |
| 145 | 39 | 92 | 146 |
| 155 | 39 | 89 | 142 |
| 165 | 38 | 86 | 139 |
| 175 | 37 | 84 | 137 |
| 185 | 36 | 81 | 134 |
| 195 | 36 | 79 | 132 |
| 255 | 33 | 69 | 116 |

PD= Design load in Psf
Max. Deflection= min. of span/30 or 2"
Spans are indicated in inches

TABLE 2.3
SLAT DEFLECTION FOR 2 SPAN SHUTTERS

| | SHUTTER SPAN | | | | | | | |
|---|---|---|---|---|---|---|---|---|
| Pd | 66 | 60 | 54 | 48 | 42 | 36 | 30 | 24 |
| 30 | 0.89 | 0.61 | 0.40 | 0.25 | 0.15 | 0.08 | 0.04 | 0.02 |
| 45 | 1.33 | 0.91 | 0.60 | 0.37 | 0.22 | 0.12 | 0.06 | 0.02 |
| 55 | 1.63 | 1.11 | 0.73 | 0.46 | 0.27 | 0.14 | 0.07 | 0.03 |
| 65 | 1.92 | 1.31 | 0.86 | 0.54 | 0.32 | 0.17 | 0.08 | 0.03 |
| 75 | - | 1.52 | 0.99 | 0.62 | 0.36 | 0.20 | 0.09 | 0.04 |
| 85 | - | 1.72 | 1.13 | 0.70 | 0.41 | 0.22 | 0.11 | 0.04 |
| 95 | - | 1.92 | 1.26 | 0.79 | 0.46 | 0.25 | 0.12 | 0.05 |
| 105 | - | - | 1.39 | 0.87 | 0.51 | 0.27 | 0.13 | 0.05 |
| 115 | - | - | 1.52 | 0.95 | 0.56 | 0.30 | 0.15 | 0.06 |
| 125 | - | - | 1.66 | 1.03 | 0.61 | 0.33 | 0.16 | 0.06 |
| 135 | - | - | 1.79 | 1.12 | 0.65 | 0.35 | 0.17 | 0.07 |
| 145 | - | - | - | 1.20 | 0.70 | 0.38 | 0.18 | 0.07 |
| 155 | - | - | - | 1.28 | 0.75 | 0.41 | 0.20 | 0.08 |
| 165 | - | - | - | 1.37 | 0.80 | 0.43 | 0.21 | 0.09 |
| 175 | - | - | - | 1.45 | 0.85 | 0.46 | 0.22 | 0.09 |
| 185 | - | - | - | 1.53 | 0.90 | 0.48 | 0.23 | 0.10 |
| 195 | - | - | - | - | 0.95 | 0.51 | 0.25 | 0.10 |
| 255 | - | - | - | - | 1.24 | 0.67 | 0.32 | 0.13 |

Deflections are indicated in inches

TABLE 3.3
SLAT DEFLECTION FOR 3 SPAN SHUTTERS

| | SHUTTER SPAN | | | | | | | |
|---|---|---|---|---|---|---|---|---|
| Pd | 66 | 60 | 54 | 48 | 42 | 36 | 30 | 24 |
| 30 | 1.13 | 0.77 | 0.51 | 0.32 | 0.19 | 0.10 | 0.05 | 0.02 |
| 45 | 1.70 | 1.16 | 0.76 | 0.48 | 0.28 | 0.15 | 0.07 | 0.03 |
| 55 | - | 1.42 | 0.93 | 0.58 | 0.34 | 0.18 | 0.09 | 0.04 |
| 65 | - | 1.68 | 1.10 | 0.69 | 0.40 | 0.22 | 0.10 | 0.04 |
| 75 | - | 1.93 | 1.27 | 0.79 | 0.46 | 0.25 | 0.12 | 0.05 |
| 85 | - | - | 1.44 | 0.90 | 0.53 | 0.28 | 0.14 | 0.06 |
| 95 | - | - | 1.61 | 1.00 | 0.59 | 0.32 | 0.15 | 0.06 |
| 105 | - | - | 1.78 | 1.11 | 0.65 | 0.35 | 0.17 | 0.07 |
| 115 | - | - | - | 1.22 | 0.71 | 0.38 | 0.19 | 0.08 |
| 125 | - | - | - | 1.32 | 0.77 | 0.42 | 0.20 | 0.08 |
| 135 | - | - | - | 1.43 | 0.84 | 0.45 | 0.22 | 0.09 |
| 145 | - | - | - | 1.53 | 0.90 | 0.48 | 0.23 | 0.10 |
| 155 | - | - | - | - | 0.96 | 0.52 | 0.25 | 0.10 |
| 165 | - | - | - | - | 1.02 | 0.55 | 0.27 | 0.11 |
| 175 | - | - | - | - | 1.08 | 0.59 | 0.28 | 0.12 |
| 185 | - | - | - | - | 1.15 | 0.62 | 0.30 | 0.12 |
| 195 | - | - | - | - | 1.21 | 0.65 | 0.31 | 0.13 |
| 255 | - | - | - | - | - | 0.85 | 0.41 | 0.17 |

| (GS) GLASS SEPARATION | |
|---|---|
| LARGE MISSILE IMPACT | WIND LOAD ONLY |
| 4 7/8" -48"<=SPAN<=66 5/8" | |
| 4" -30"<SPAN<48" | 3" |
| 3 1/2" -SPAN<=30" | ALL CONDITIONS |

GLASS SEPARATION FOR LARGE MISSILE IMPACT IS APPLICABLE FOR INSTALLATION UP TO 30 FT. OF GRADE DUE TO LARGE MISSILE IMPACT. WIND LOAD GLASS SEPARATION APPLIES TO INSTALLATION ABOVE 30 FT. OF GRADE.

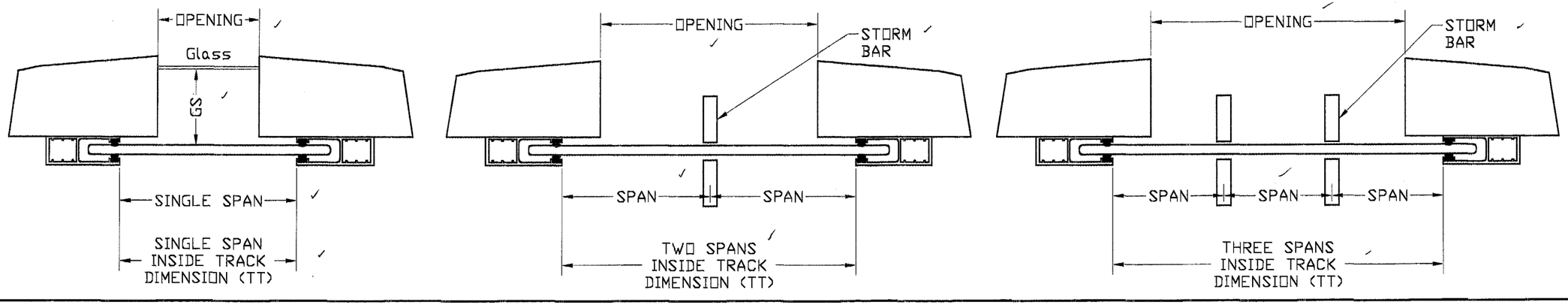



Manufacturer:
Alutech United, Inc
15 DIXON STREET
SELBYVILLE, DE 19975
Tel.: (302) 854-9100


Product:
RE1000
EXTRUDED ALUMINUM ROLL SHUTTERS


Engineering:
EngCo Inc.
CA 8116
6971 W. Sunrise Blvd. 104
Plantation, Fl. 33313
Tel.: (954) 585-0304


SEP 2 0 2001
Engineer Seal
Pedro De Figueiredo
PE 52609

Date: 8/5/01
Scale: 1:1
Design by: PPMF

Dade County NOA:
SOUTH FLORIDA BUILDING CODE
DATE 10/18/2001
BY
PRODUCT CONTROL DIVISION
BUILDING CODE COMPLIANCE OFFICE
ACCEPTANCE NO. 01-0507.01

Drawing Number
01-060R

# GUIDE RAILS MOUNTING OPTIONS

## MOUNT: WALL

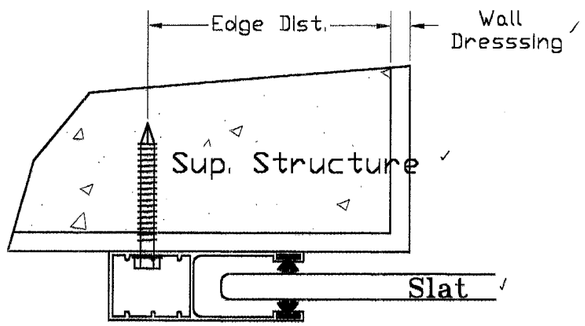


DESIGNED PRESSURES

| | ANCHOR SPACING | | | |
|---|---|---|---|---|
| TRACK | 12 | 9 | 6 | 3 |
| ANCHOR A | 75 | 125 | 215 | <255 |
| ANCHOR B | na | 30 | 65 | <195 |
| ANCHOR C | 85 | 135 | 195 | <255 |

## MOUNT: INSET

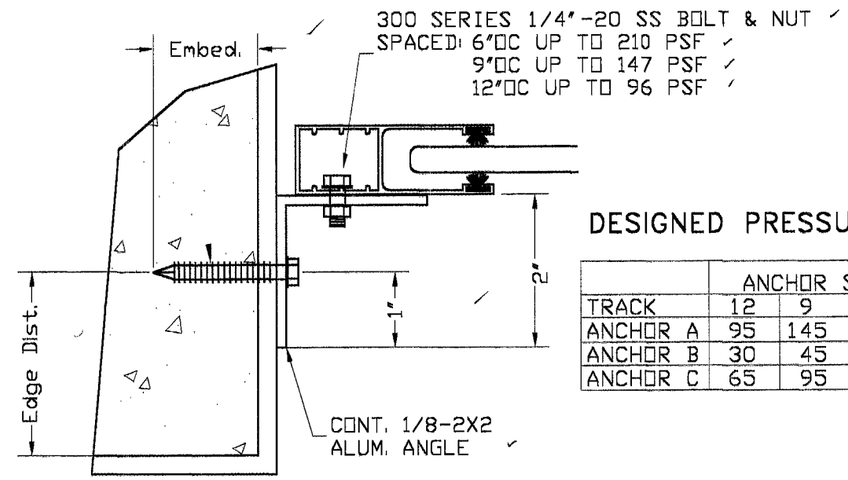


DESIGNED PRESSURES

| | ANCHOR SPACING | | | |
|---|---|---|---|---|
| TRACK | 12 | 9 | 6 | 3 |
| ANCHOR A | 95 | 145 | <255 | - |
| ANCHOR B | 30 | 45 | 95 | <255 |
| ANCHOR C | 65 | 95 | 185 | <255 |

## MOUNT: BUILT-OUT

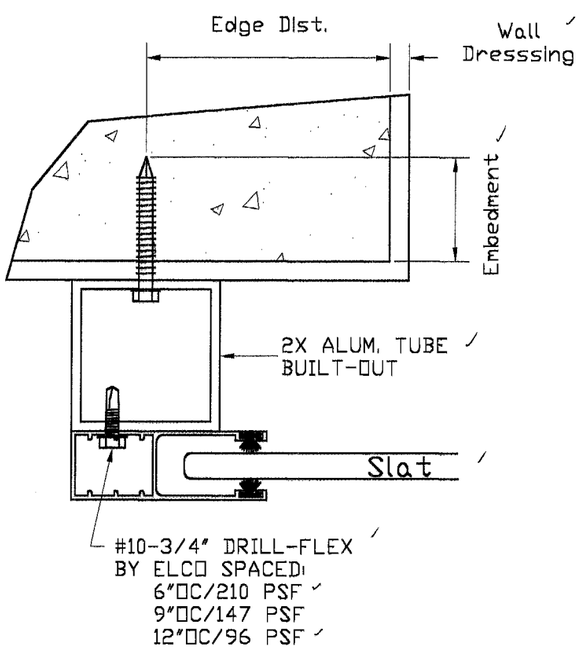


DESIGNED PRESSURES

| | ANCHOR SPACING | | | |
|---|---|---|---|---|
| TRACK | 12 | 9 | 6 | 3 |
| ANCHOR A | 165 | <255 | - | - |
| ANCHOR B | 45 | 75 | 145 | <255 |
| ANCHOR C | 175 | <255 | - | - |

ANCHORAGE NOTE: ANCHOR SPACING IS CONTROLLED BY THE SPAN VS PRESSURE TABLES ON SHEET 3 OF 14

ANCHOR SCHEDULE

| Type | Description | Embedment | Substract | Manufacturer |
|---|---|---|---|---|
| A | 1/4" Tapcon | 1 3/4" | Concrete | Elco |
| B | 1/4" Tapcon | 1 1/4" | Hollow Block | Elco |
| C | #14 SS Wood Screws | 1 1/2" | Wood (SG=.55) | Elco |

EDGE DISTANCE =3"


Manufacturer:
Alutech United, Inc
15 DIXON STREET
SELBYVILLE, DE 19975
Tel.: (302) 854-9100


Product:
RE1000
EXTRUDED ALUMINUM ROLL SHUTTERS


Engineering:
EngCo Inc.
CA 8116
6971 W. Sunrise Blvd. 104
Plantation, Fl. 33313
Tel.: (954) 585-0304


SEP 2 0 2001

Engineer Seal
Pedro De Figueiredo
PE 52609

Date: 8/5/01
Scale: 1:1
Design by: PPMF

Dade County NOA:
APPROVED AS COMPLYING WITH THE SOUTH FLORIDA BUILDING CODE
DATE 10/18/2001
BY
PRODUCT CONTROL DIVISION
BUILDING CODE COMPLIANCE OFFICE
ACCEPTANCE NO. 01-0507.01

Drawing Number
01-060R

# STORM BAR SELECTION AND DEFLECTION TABLES

## 1/8 2X2 STORM BAR

MAXIMUM ALLOWABLE
STORM BAR HEIGHT
2 SPANS SHUTTER

| | SHUTTER SPAN | | | | | | | |
|---|---|---|---|---|---|---|---|---|
| Pd | 66 | 60 | 54 | 48 | 42 | 36 | 30 | 24 |
| 30 | 71 | 75 | 79 | 83 | 89 | 96 | 101 | 107 |
| 45 | 58 | 61 | 64 | 68 | 73 | 79 | 86 | 96 |
| 55 | 52 | 55 | 58 | 61 | 66 | 71 | 78 | 87 |
| 65 | 48 | 50 | 53 | 57 | 60 | 65 | 72 | 80 |
| 75 | 45 | 47 | 50 | 53 | 56 | 61 | 67 | 75 |
| 85 | 42 | 44 | 46 | 49 | 53 | 57 | 63 | 70 |
| 95 | 40 | 42 | 44 | 47 | 50 | 54 | 59 | 66 |
| 105 | 38 | 40 | 42 | 44 | 47 | 51 | 56 | 63 |
| 115 | 36 | 38 | 40 | 42 | 45 | 49 | 54 | 60 |
| 125 | 35 | 36 | 38 | 41 | 43 | 47 | 51 | 58 |
| 135 | 33 | 35 | 37 | 39 | 42 | 45 | 50 | 55 |
| 145 | 32 | 34 | 35 | 38 | 40 | 44 | 48 | 53 |
| 155 | 31 | 33 | 34 | 36 | 39 | 42 | 46 | 52 |
| 165 | 30 | 32 | 33 | 35 | 38 | 41 | 45 | 50 |
| 175 | 29 | 31 | 32 | 34 | 37 | 40 | 43 | 49 |
| 185 | 28 | 30 | 31 | 33 | 36 | 39 | 42 | 47 |
| 195 | 27 | 29 | 31 | 32 | 35 | 38 | 41 | 46 |
| 255 | 21 | 23 | 26 | 28 | 30 | 33 | 36 | 40 |

MAXIMUM ALLOWABLE
STORM BAR HEIGHT
3 SPANS SHUTTER

| | SHUTTER SPAN | | | | | | | |
|---|---|---|---|---|---|---|---|---|
| Pd | 66 | 60 | 54 | 48 | 42 | 36 | 30 | 24 |
| 30 | 76 | 80 | 84 | 89 | 95 | 100 | 105 | 111 |
| 45 | 62 | 65 | 68 | 73 | 78 | 84 | 92 | 100 |
| 55 | 56 | 59 | 62 | 66 | 70 | 76 | 83 | 93 |
| 65 | 47 | 52 | 57 | 60 | 64 | 70 | 76 | 85 |
| 75 | 41 | 45 | 50 | 56 | 60 | 65 | 71 | 80 |
| 85 | 36 | 39 | 44 | 49 | 56 | 61 | 67 | 75 |
| 95 | 32 | 35 | 39 | 44 | 51 | 58 | 63 | 71 |
| 105 | 29 | 32 | 35 | 40 | 46 | 53 | 60 | 67 |
| 115 | 26 | 29 | 32 | 36 | 42 | 49 | 57 | 64 |
| 125 | 24 | 27 | 30 | 33 | 38 | 45 | 54 | 61 |
| 135 | 22 | 25 | 27 | 31 | 35 | 41 | 50 | 59 |
| 145 | 21 | 23 | 26 | 29 | 33 | 39 | 46 | 57 |
| 155 | 19 | 21 | 24 | 27 | 31 | 36 | 43 | 54 |
| 165 | 18 | 20 | 22 | 25 | 29 | 34 | 41 | 51 |
| 175 | 17 | 19 | 21 | 24 | 27 | 32 | 38 | 48 |
| 185 | 16 | 18 | 20 | 22 | 26 | 30 | 36 | 45 |
| 195 | 15 | 17 | 19 | 21 | 24 | 29 | 34 | 43 |
| 255 | 12 | 13 | 14 | 16 | 19 | 22 | 26 | 33 |

STORM BAR MAXIMUM DEFLECTION
2 SPANS SHUTTER

| | SHUTTER SPAN | | | | | | | |
|---|---|---|---|---|---|---|---|---|
| Pd | 66 | 60 | 54 | 48 | 42 | 36 | 30 | 24 |
| 30 | 1.0 | 1.2 | 1.3 | 1.4 | 1.6 | 1.9 | 1.9 | 1.9 |
| 45 | 0.7 | 0.8 | 0.8 | 0.9 | 1.1 | 1.3 | 1.5 | 1.9 |
| 55 | 0.5 | 0.6 | 0.7 | 0.8 | 0.9 | 1.0 | 1.3 | 1.6 |
| 65 | 0.5 | 0.5 | 0.6 | 0.7 | 0.7 | 0.9 | 1.1 | 1.3 |
| 75 | 0.4 | 0.5 | 0.5 | 0.6 | 0.6 | 0.8 | 0.9 | 1.2 |
| 85 | 0.4 | 0.4 | 0.4 | 0.5 | 0.6 | 0.7 | 0.8 | 1.0 |
| 95 | 0.3 | 0.4 | 0.4 | 0.5 | 0.5 | 0.6 | 0.7 | 0.9 |
| 105 | 0.3 | 0.3 | 0.4 | 0.4 | 0.4 | 0.5 | 0.6 | 0.8 |
| 115 | 0.3 | 0.3 | 0.3 | 0.4 | 0.4 | 0.5 | 0.6 | 0.7 |
| 125 | 0.3 | 0.3 | 0.3 | 0.3 | 0.4 | 0.5 | 0.5 | 0.7 |
| 135 | 0.2 | 0.2 | 0.3 | 0.3 | 0.4 | 0.4 | 0.5 | 0.6 |
| 145 | 0.2 | 0.2 | 0.2 | 0.3 | 0.3 | 0.4 | 0.5 | 0.6 |
| 155 | 0.2 | 0.2 | 0.2 | 0.3 | 0.3 | 0.4 | 0.4 | 0.6 |
| 165 | 0.2 | 0.2 | 0.2 | 0.2 | 0.3 | 0.3 | 0.4 | 0.5 |
| 175 | 0.2 | 0.2 | 0.2 | 0.2 | 0.3 | 0.3 | 0.4 | 0.5 |
| 185 | 0.2 | 0.2 | 0.2 | 0.2 | 0.3 | 0.3 | 0.4 | 0.4 |
| 195 | 0.1 | 0.2 | 0.2 | 0.2 | 0.3 | 0.3 | 0.3 | 0.4 |
| 255 | 0.1 | 0.1 | 0.1 | 0.2 | 0.2 | 0.2 | 0.3 | 0.3 |

STORM BAR MAXIMUM DEFLECTION
3 SPANS SHUTTER

| | SHUTTER SPAN | | | | | | | |
|---|---|---|---|---|---|---|---|---|
| Pd | 66 | 60 | 54 | 48 | 42 | 36 | 30 | 24 |
| 30 | 1.2 | 1.3 | 1.5 | 1.6 | 1.9 | 2.0 | 2.0 | 2.0 |
| 45 | 0.8 | 0.9 | 0.9 | 1.1 | 1.3 | 1.5 | 1.7 | 2.0 |
| 55 | 0.6 | 0.7 | 0.8 | 0.9 | 1.0 | 1.2 | 1.4 | 1.8 |
| 65 | 0.4 | 0.5 | 0.7 | 0.7 | 0.8 | 1.0 | 1.2 | 1.5 |
| 75 | 0.3 | 0.3 | 0.5 | 0.6 | 0.7 | 0.9 | 1.0 | 1.3 |
| 85 | 0.2 | 0.2 | 0.3 | 0.4 | 0.6 | 0.8 | 0.9 | 1.2 |
| 95 | 0.1 | 0.2 | 0.2 | 0.3 | 0.5 | 0.7 | 0.8 | 1.0 |
| 105 | 0.1 | 0.1 | 0.2 | 0.2 | 0.4 | 0.5 | 0.7 | 0.9 |
| 115 | 0.1 | 0.1 | 0.1 | 0.2 | 0.3 | 0.4 | 0.7 | 0.8 |
| 125 | 0.0 | 0.1 | 0.1 | 0.1 | 0.2 | 0.3 | 0.6 | 0.8 |
| 135 | 0.0 | 0.1 | 0.1 | 0.1 | 0.2 | 0.2 | 0.5 | 0.7 |
| 145 | 0.0 | 0.0 | 0.1 | 0.1 | 0.1 | 0.2 | 0.4 | 0.7 |
| 155 | 0.0 | 0.0 | 0.1 | 0.1 | 0.1 | 0.2 | 0.3 | 0.6 |
| 165 | 0.0 | 0.0 | 0.0 | 0.1 | 0.1 | 0.1 | 0.3 | 0.5 |
| 175 | 0.0 | 0.0 | 0.0 | 0.1 | 0.1 | 0.1 | 0.2 | 0.4 |
| 185 | 0.0 | 0.0 | 0.0 | 0.0 | 0.1 | 0.1 | 0.2 | 0.3 |
| 195 | 0.0 | 0.0 | 0.0 | 0.0 | 0.0 | 0.1 | 0.1 | 0.3 |
| 255 | 0.0 | 0.0 | 0.0 | 0.0 | 0.0 | 0.0 | 0.1 | 0.1 |

DEFLECTION IN INCHES BASED ON MAX. STORM BAR HEIGHT
STORM BAR HEIGHT IN INCHES
Pd- DESIGNED PRESSURE IN PSF
SHUTTER SPAN IN INCHES

## 1/8 2X3 STORM BAR

MAXIMUM ALLOWABLE
STORM BAR HEIGHT
2 SPANS SHUTTER

| | SHUTTER SPAN | | | | | | | |
|---|---|---|---|---|---|---|---|---|
| Pd | 66 | 60 | 54 | 48 | 42 | 36 | 30 | 24 |
| 30 | 95 | 100 | 105 | 111 | 119 | 120 | 120 | 120 |
| 45 | 77 | 81 | 86 | 91 | 97 | 105 | 115 | 120 |
| 55 | 70 | 73 | 77 | 82 | 88 | 95 | 104 | 116 |
| 65 | 64 | 67 | 71 | 75 | 81 | 87 | 96 | 107 |
| 75 | 60 | 63 | 66 | 70 | 75 | 81 | 89 | 100 |
| 85 | 56 | 59 | 62 | 66 | 71 | 76 | 84 | 93 |
| 95 | 53 | 56 | 59 | 62 | 67 | 72 | 79 | 88 |
| 105 | 50 | 53 | 56 | 59 | 63 | 69 | 75 | 84 |
| 115 | 47 | 51 | 53 | 57 | 61 | 65 | 72 | 80 |
| 125 | 43 | 47 | 51 | 54 | 58 | 63 | 69 | 77 |
| 135 | 40 | 44 | 49 | 52 | 56 | 60 | 66 | 74 |
| 145 | 37 | 41 | 45 | 50 | 54 | 58 | 64 | 71 |
| 155 | 35 | 38 | 42 | 48 | 52 | 56 | 62 | 69 |
| 165 | 32 | 36 | 40 | 45 | 50 | 55 | 60 | 67 |
| 175 | 31 | 34 | 37 | 42 | 48 | 53 | 58 | 65 |
| 185 | 29 | 32 | 35 | 40 | 46 | 52 | 56 | 63 |
| 195 | 27 | 30 | 34 | 38 | 43 | 50 | 55 | 62 |
| 255 | 21 | 23 | 26 | 29 | 33 | 39 | 46 | 54 |

MAXIMUM ALLOWABLE
STORM BAR HEIGHT
3 SPANS SHUTTER

| | SHUTTER SPAN | | | | | | | |
|---|---|---|---|---|---|---|---|---|
| Pd | 66 | 60 | 54 | 48 | 42 | 36 | 30 | 24 |
| 30 | 101 | 106 | 112 | 119 | 120 | 120 | 120 | 120 |
| 45 | 68 | 75 | 83 | 94 | 104 | 112 | 120 | 120 |
| 55 | 56 | 61 | 68 | 77 | 88 | 101 | 111 | 120 |
| 65 | 47 | 52 | 58 | 65 | 74 | 87 | 102 | 114 |
| 75 | 41 | 45 | 50 | 56 | 64 | 75 | 90 | 106 |
| 85 | 36 | 39 | 44 | 49 | 57 | 66 | 79 | 99 |
| 95 | 32 | 35 | 39 | 44 | 51 | 59 | 71 | 89 |
| 105 | 29 | 32 | 35 | 40 | 46 | 53 | 64 | 80 |
| 115 | 26 | 29 | 32 | 36 | 42 | 49 | 59 | 73 |
| 125 | 24 | 27 | 30 | 33 | 38 | 45 | 54 | 67 |
| 135 | 22 | 25 | 27 | 31 | 35 | 41 | 50 | 62 |
| 145 | 21 | 23 | 26 | 29 | 33 | 39 | 46 | 58 |
| 155 | 19 | 21 | 24 | 27 | 31 | 36 | 43 | 54 |
| 165 | 18 | 20 | 22 | 25 | 29 | 34 | 41 | 51 |
| 175 | 17 | 19 | 21 | 24 | 27 | 32 | 38 | 48 |
| 185 | 16 | 18 | 20 | 22 | 26 | 30 | 36 | 45 |
| 195 | 15 | 17 | 19 | 21 | 24 | 29 | 34 | 43 |
| 255 | 12 | 13 | 14 | 16 | 19 | 22 | 26 | 33 |

STORM BAR MAXIMUM DEFLECTION
2 SPANS SHUTTER

| | SHUTTER SPAN | | | | | | | |
|---|---|---|---|---|---|---|---|---|
| Pd | 66 | 60 | 54 | 48 | 42 | 36 | 30 | 24 |
| 30 | 1.2 | 1.4 | 1.5 | 1.7 | 1.9 | 1.7 | 1.4 | 1.1 |
| 45 | 0.8 | 0.9 | 1.0 | 1.1 | 1.3 | 1.5 | 1.8 | 1.7 |
| 55 | 0.7 | 0.7 | 0.8 | 0.9 | 1.1 | 1.2 | 1.5 | 1.8 |
| 65 | 0.6 | 0.6 | 0.7 | 0.8 | 0.9 | 1.0 | 1.3 | 1.6 |
| 75 | 0.5 | 0.5 | 0.6 | 0.7 | 0.8 | 0.9 | 1.1 | 1.4 |
| 85 | 0.4 | 0.5 | 0.5 | 0.6 | 0.7 | 0.8 | 1.0 | 1.2 |
| 95 | 0.4 | 0.4 | 0.5 | 0.5 | 0.6 | 0.7 | 0.9 | 1.1 |
| 105 | 0.3 | 0.4 | 0.4 | 0.5 | 0.5 | 0.7 | 0.8 | 1.0 |
| 115 | 0.3 | 0.4 | 0.4 | 0.4 | 0.5 | 0.6 | 0.7 | 0.9 |
| 125 | 0.2 | 0.3 | 0.4 | 0.4 | 0.5 | 0.5 | 0.7 | 0.8 |
| 135 | 0.2 | 0.2 | 0.3 | 0.4 | 0.4 | 0.5 | 0.6 | 0.7 |
| 145 | 0.1 | 0.2 | 0.2 | 0.3 | 0.4 | 0.5 | 0.6 | 0.7 |
| 155 | 0.1 | 0.1 | 0.2 | 0.3 | 0.4 | 0.4 | 0.5 | 0.6 |
| 165 | 0.1 | 0.1 | 0.2 | 0.2 | 0.3 | 0.4 | 0.5 | 0.6 |
| 175 | 0.1 | 0.1 | 0.1 | 0.2 | 0.3 | 0.4 | 0.5 | 0.6 |
| 185 | 0.1 | 0.1 | 0.1 | 0.2 | 0.3 | 0.4 | 0.4 | 0.5 |
| 195 | 0.1 | 0.1 | 0.1 | 0.2 | 0.2 | 0.3 | 0.4 | 0.5 |
| 255 | 0.0 | 0.0 | 0.0 | 0.1 | 0.1 | 0.2 | 0.3 | 0.4 |

STORM BAR MAXIMUM DEFLECTION
3 SPANS SHUTTER

| | SHUTTER SPAN | | | | | | | |
|---|---|---|---|---|---|---|---|---|
| Pd | 66 | 60 | 54 | 48 | 42 | 36 | 30 | 24 |
| 30 | 1.4 | 1.5 | 1.7 | 2.0 | 1.8 | 1.5 | 1.3 | 1.0 |
| 45 | 0.4 | 0.6 | 0.8 | 1.1 | 1.5 | 1.7 | 1.9 | 1.5 |
| 55 | 0.2 | 0.3 | 0.4 | 0.6 | 0.9 | 1.4 | 1.7 | 1.9 |
| 65 | 0.1 | 0.2 | 0.3 | 0.4 | 0.6 | 0.9 | 1.4 | 1.8 |
| 75 | 0.1 | 0.1 | 0.2 | 0.2 | 0.4 | 0.6 | 1.0 | 1.5 |
| 85 | 0.1 | 0.1 | 0.1 | 0.2 | 0.3 | 0.4 | 0.7 | 1.3 |
| 95 | 0.0 | 0.1 | 0.1 | 0.1 | 0.2 | 0.3 | 0.5 | 1.0 |
| 105 | 0.0 | 0.0 | 0.1 | 0.1 | 0.1 | 0.2 | 0.4 | 0.7 |
| 115 | 0.0 | 0.0 | 0.0 | 0.1 | 0.1 | 0.2 | 0.3 | 0.5 |
| 125 | 0.0 | 0.0 | 0.0 | 0.0 | 0.1 | 0.1 | 0.2 | 0.4 |
| 135 | 0.0 | 0.0 | 0.0 | 0.0 | 0.1 | 0.1 | 0.2 | 0.3 |
| 145 | 0.0 | 0.0 | 0.0 | 0.0 | 0.0 | 0.1 | 0.1 | 0.3 |
| 155 | 0.0 | 0.0 | 0.0 | 0.0 | 0.0 | 0.1 | 0.1 | 0.2 |
| 165 | 0.0 | 0.0 | 0.0 | 0.0 | 0.0 | 0.1 | 0.1 | 0.2 |
| 175 | 0.0 | 0.0 | 0.0 | 0.0 | 0.0 | 0.0 | 0.1 | 0.2 |
| 185 | 0.0 | 0.0 | 0.0 | 0.0 | 0.0 | 0.0 | 0.1 | 0.1 |
| 195 | 0.0 | 0.0 | 0.0 | 0.0 | 0.0 | 0.0 | 0.1 | 0.1 |
| 255 | 0.0 | 0.0 | 0.0 | 0.0 | 0.0 | 0.0 | 0.0 | 0.0 |

DEFLECTION IN INCHES BASED ON MAX. STORM BAR HEIGHT
STORM BAR HEIGHT IN INCHES
Pd- DESIGNED PRESSURE IN PSF
SHUTTER SPAN IN INCHES

NOTE: STORM BARS ALLOWABLE HEIGHT ARE CONTROLLED BY THE MAXIMUM ALLOWABLE HEADER END REACTION.


Manufacturer:
Alutech United, Inc
15 DIXON STREET
SELBYVILLE, DE 19975
Tel.: (302) 854-9100


Product:
RE1000
EXTRUDED ALUMINUM ROLL SHUTTERS


Engineering:
EngCo Inc.
CA 8116
6971 W. Sunrise Blvd. 104
Plantation, Fl. 33313
Tel.: (954) 585-0304


SEP 2 0 2001
Engineer Seal
Pedro De Figueiredo
PE 52609

Date: 8/5/01
Scale: NA
Design by: PPMF

Dade County NOA:
APPROVED AS COMPLYING WITH THE SOUTH FLORIDA BUILDING CODE
DATE 10/18/2001
BY
PRODUCT CONTROL DIVISION
BUILDING CODE COMPLIANCE OFFICE
ACCEPTANCE NO. 01-0507.01

Drawing Number
01-060R

# STORM BAR SELECTION AND DEFLECTION TABLES

## 1/8 2X4 STORM BAR

MAXIMUM ALLOWABLE
STORM BAR HEIGHT
2 SPANS SHUTTER

| | SHUTTER SPAN | | | | | | | |
|---|---|---|---|---|---|---|---|---|
| Pd | 66 | 60 | 54 | 48 | 42 | 36 | 30 | 24 |
| 30 | 117 | 120 | 120 | 120 | 120 | 120 | 120 | 120 |
| 45 | 95 | 100 | 105 | 112 | 119 | 120 | 120 | 120 |
| 55 | 86 | 90 | 95 | 101 | 108 | 117 | 120 | 120 |
| 65 | 79 | 83 | 87 | 93 | 99 | 107 | 117 | 120 |
| 75 | 72 | 77 | 81 | 86 | 92 | 100 | 109 | 120 |
| 85 | 63 | 70 | 76 | 81 | 87 | 94 | 103 | 115 |
| 95 | 57 | 62 | 69 | 77 | 82 | 89 | 97 | 109 |
| 105 | 51 | 56 | 63 | 71 | 78 | 84 | 92 | 103 |
| 115 | 47 | 52 | 57 | 65 | 74 | 80 | 88 | 99 |
| 125 | 43 | 47 | 53 | 59 | 68 | 77 | 85 | 95 |
| 135 | 40 | 44 | 49 | 55 | 63 | 73 | 81 | 91 |
| 145 | 37 | 41 | 45 | 51 | 58 | 68 | 78 | 88 |
| 155 | 35 | 38 | 42 | 48 | 55 | 64 | 76 | 85 |
| 165 | 32 | 36 | 40 | 45 | 51 | 60 | 72 | 82 |
| 175 | 31 | 34 | 37 | 42 | 48 | 56 | 68 | 80 |
| 185 | 29 | 32 | 35 | 40 | 46 | 53 | 64 | 78 |
| 195 | 27 | 30 | 34 | 38 | 43 | 51 | 61 | 76 |
| 255 | 21 | 23 | 26 | 29 | 33 | 39 | 46 | 58 |

MAXIMUM ALLOWABLE
STORM BAR HEIGHT
3 SPANS SHUTTER

| | SHUTTER SPAN | | | | | | | |
|---|---|---|---|---|---|---|---|---|
| Pd | 66 | 60 | 54 | 48 | 42 | 36 | 30 | 24 |
| 30 | 102 | 113 | 120 | 120 | 120 | 120 | 120 | 120 |
| 45 | 68 | 75 | 83 | 94 | 107 | 120 | 120 | 120 |
| 55 | 56 | 61 | 68 | 77 | 88 | 102 | 120 | 120 |
| 65 | 47 | 52 | 58 | 65 | 74 | 87 | 104 | 120 |
| 75 | 41 | 45 | 50 | 56 | 64 | 75 | 90 | 113 |
| 85 | 36 | 39 | 44 | 49 | 57 | 66 | 79 | 99 |
| 95 | 32 | 35 | 39 | 44 | 51 | 59 | 71 | 89 |
| 105 | 29 | 32 | 35 | 40 | 46 | 53 | 64 | 80 |
| 115 | 26 | 29 | 32 | 36 | 42 | 49 | 59 | 73 |
| 125 | 24 | 27 | 30 | 33 | 38 | 45 | 54 | 67 |
| 135 | 22 | 25 | 27 | 31 | 35 | 41 | 50 | 62 |
| 145 | 21 | 23 | 26 | 29 | 33 | 39 | 46 | 58 |
| 155 | 19 | 21 | 24 | 27 | 31 | 36 | 43 | 54 |
| 165 | 18 | 20 | 22 | 25 | 29 | 34 | 41 | 51 |
| 175 | 17 | 19 | 21 | 24 | 27 | 32 | 38 | 48 |
| 185 | 16 | 18 | 20 | 22 | 26 | 30 | 36 | 45 |
| 195 | 15 | 17 | 19 | 21 | 24 | 29 | 34 | 43 |
| 255 | 12 | 13 | 14 | 16 | 19 | 22 | 26 | 33 |

STORM BAR MAXIMUM DEFLECTION
2 SPANS SHUTTER

| | SHUTTER SPAN | | | | | | | |
|---|---|---|---|---|---|---|---|---|
| Pd | 66 | 60 | 54 | 48 | 42 | 36 | 30 | 24 |
| 30 | 1.4 | 1.4 | 1.3 | 1.1 | 1.0 | 0.8 | 0.7 | 0.6 |
| 45 | 0.9 | 1.0 | 1.1 | 1.3 | 1.4 | 1.3 | 1.1 | 0.8 |
| 55 | 0.8 | 0.8 | 0.9 | 1.0 | 1.2 | 1.4 | 1.3 | 1.0 |
| 65 | 0.6 | 0.7 | 0.8 | 0.9 | 1.0 | 1.2 | 1.4 | 1.2 |
| 75 | 0.5 | 0.6 | 0.7 | 0.7 | 0.9 | 1.0 | 1.2 | 1.4 |
| 85 | 0.3 | 0.5 | 0.6 | 0.7 | 0.8 | 0.9 | 1.1 | 1.4 |
| 95 | 0.3 | 0.3 | 0.4 | 0.6 | 0.7 | 0.8 | 1.0 | 1.2 |
| 105 | 0.2 | 0.2 | 0.3 | 0.5 | 0.6 | 0.7 | 0.9 | 1.1 |
| 115 | 0.1 | 0.2 | 0.2 | 0.4 | 0.5 | 0.6 | 0.8 | 1.0 |
| 125 | 0.1 | 0.1 | 0.2 | 0.3 | 0.4 | 0.6 | 0.7 | 0.9 |
| 135 | 0.1 | 0.1 | 0.2 | 0.2 | 0.3 | 0.5 | 0.7 | 0.8 |
| 145 | 0.1 | 0.1 | 0.1 | 0.2 | 0.3 | 0.4 | 0.6 | 0.8 |
| 155 | 0.1 | 0.1 | 0.1 | 0.1 | 0.2 | 0.4 | 0.6 | 0.7 |
| 165 | 0.0 | 0.1 | 0.1 | 0.1 | 0.2 | 0.3 | 0.5 | 0.7 |
| 175 | 0.0 | 0.1 | 0.1 | 0.1 | 0.1 | 0.2 | 0.4 | 0.7 |
| 185 | 0.0 | 0.0 | 0.1 | 0.1 | 0.1 | 0.2 | 0.4 | 0.6 |
| 195 | 0.0 | 0.0 | 0.1 | 0.1 | 0.1 | 0.2 | 0.3 | 0.6 |
| 255 | 0.0 | 0.0 | 0.0 | 0.0 | 0.0 | 0.1 | 0.1 | 0.3 |

STORM BAR MAXIMUM DEFLECTION
3 SPANS SHUTTER

| | SHUTTER SPAN | | | | | | | |
|---|---|---|---|---|---|---|---|---|
| Pd | 66 | 60 | 54 | 48 | 42 | 36 | 30 | 24 |
| 30 | 0.7 | 1.0 | 1.1 | 1.0 | 0.9 | 0.7 | 0.6 | 0.5 |
| 45 | 0.2 | 0.3 | 0.4 | 0.6 | 0.8 | 1.1 | 0.9 | 0.7 |
| 55 | 0.1 | 0.2 | 0.2 | 0.3 | 0.5 | 0.7 | 1.1 | 0.9 |
| 65 | 0.1 | 0.1 | 0.1 | 0.2 | 0.3 | 0.4 | 0.8 | 1.1 |
| 75 | 0.0 | 0.1 | 0.1 | 0.1 | 0.2 | 0.3 | 0.5 | 1.0 |
| 85 | 0.0 | 0.0 | 0.1 | 0.1 | 0.1 | 0.2 | 0.3 | 0.7 |
| 95 | 0.0 | 0.0 | 0.0 | 0.1 | 0.1 | 0.1 | 0.2 | 0.5 |
| 105 | 0.0 | 0.0 | 0.0 | 0.0 | 0.1 | 0.1 | 0.2 | 0.3 |
| 115 | 0.0 | 0.0 | 0.0 | 0.0 | 0.1 | 0.1 | 0.1 | 0.3 |
| 125 | 0.0 | 0.0 | 0.0 | 0.0 | 0.0 | 0.1 | 0.1 | 0.2 |
| 135 | 0.0 | 0.0 | 0.0 | 0.0 | 0.0 | 0.0 | 0.1 | 0.2 |
| 145 | 0.0 | 0.0 | 0.0 | 0.0 | 0.0 | 0.0 | 0.1 | 0.1 |
| 155 | 0.0 | 0.0 | 0.0 | 0.0 | 0.0 | 0.0 | 0.1 | 0.1 |
| 165 | 0.0 | 0.0 | 0.0 | 0.0 | 0.0 | 0.0 | 0.0 | 0.1 |
| 175 | 0.0 | 0.0 | 0.0 | 0.0 | 0.0 | 0.0 | 0.0 | 0.1 |
| 185 | 0.0 | 0.0 | 0.0 | 0.0 | 0.0 | 0.0 | 0.0 | 0.1 |
| 195 | 0.0 | 0.0 | 0.0 | 0.0 | 0.0 | 0.0 | 0.0 | 0.1 |
| 255 | 0.0 | 0.0 | 0.0 | 0.0 | 0.0 | 0.0 | 0.0 | 0.0 |

DEFLECTION IN INCHES BASED ON MAX. STORM BAR HEIGHT
STORM BAR HEIGHT IN INCHES
Pd- DESIGNED PRESSURE IN PSF
SHUTTER SPAN IN INCHES

## 1/8 2X5 STORM BAR

MAXIMUM ALLOWABLE
STORM BAR HEIGHT
2 SPANS SHUTTER

| | SHUTTER SPAN | | | | | | | |
|---|---|---|---|---|---|---|---|---|
| Pd | 66 | 60 | 54 | 48 | 42 | 36 | 30 | 24 |
| 30 | 120 | 120 | 120 | 120 | 120 | 120 | 120 | 120 |
| 45 | 112 | 117 | 120 | 120 | 120 | 120 | 120 | 120 |
| 55 | 98 | 106 | 112 | 119 | 120 | 120 | 120 | 120 |
| 65 | 83 | 92 | 102 | 109 | 117 | 120 | 120 | 120 |
| 75 | 72 | 79 | 88 | 99 | 109 | 117 | 120 | 120 |
| 85 | 63 | 70 | 78 | 87 | 100 | 110 | 120 | 120 |
| 95 | 57 | 62 | 69 | 78 | 89 | 104 | 114 | 120 |
| 105 | 51 | 56 | 63 | 71 | 81 | 94 | 109 | 120 |
| 115 | 47 | 52 | 57 | 65 | 74 | 86 | 104 | 116 |
| 125 | 43 | 47 | 53 | 59 | 68 | 79 | 95 | 111 |
| 135 | 40 | 44 | 49 | 55 | 63 | 73 | 88 | 107 |
| 145 | 37 | 41 | 45 | 51 | 58 | 68 | 82 | 103 |
| 155 | 35 | 38 | 42 | 48 | 55 | 64 | 77 | 96 |
| 165 | 32 | 36 | 40 | 45 | 51 | 60 | 72 | 90 |
| 175 | 31 | 34 | 37 | 42 | 48 | 56 | 68 | 85 |
| 185 | 29 | 32 | 35 | 40 | 46 | 53 | 64 | 80 |
| 195 | 27 | 30 | 34 | 38 | 43 | 51 | 61 | 76 |
| 255 | 21 | 23 | 26 | 29 | 33 | 39 | 46 | 58 |

MAXIMUM ALLOWABLE
STORM BAR HEIGHT
3 SPANS SHUTTER

| | SHUTTER SPAN | | | | | | | |
|---|---|---|---|---|---|---|---|---|
| Pd | 66 | 60 | 54 | 48 | 42 | 36 | 30 | 24 |
| 30 | 102 | 113 | 120 | 120 | 120 | 120 | 120 | 120 |
| 45 | 68 | 75 | 83 | 94 | 107 | 120 | 120 | 120 |
| 55 | 56 | 61 | 68 | 77 | 88 | 102 | 120 | 120 |
| 65 | 47 | 52 | 58 | 65 | 74 | 87 | 104 | 120 |
| 75 | 41 | 45 | 50 | 56 | 64 | 75 | 90 | 113 |
| 85 | 36 | 39 | 44 | 49 | 57 | 66 | 79 | 99 |
| 95 | 32 | 35 | 39 | 44 | 51 | 59 | 71 | 89 |
| 105 | 29 | 32 | 35 | 40 | 46 | 53 | 64 | 80 |
| 115 | 26 | 29 | 32 | 36 | 42 | 49 | 59 | 73 |
| 125 | 24 | 27 | 30 | 33 | 38 | 45 | 54 | 67 |
| 135 | 22 | 25 | 27 | 31 | 35 | 41 | 50 | 62 |
| 145 | 21 | 23 | 26 | 29 | 33 | 39 | 46 | 58 |
| 155 | 19 | 21 | 24 | 27 | 31 | 36 | 43 | 54 |
| 165 | 18 | 20 | 22 | 25 | 29 | 34 | 41 | 51 |
| 175 | 17 | 19 | 21 | 24 | 27 | 32 | 38 | 48 |
| 185 | 16 | 18 | 20 | 22 | 26 | 30 | 36 | 45 |
| 195 | 15 | 17 | 19 | 21 | 24 | 29 | 34 | 43 |
| 255 | 12 | 13 | 14 | 16 | 19 | 22 | 26 | 33 |

STORM BAR MAXIMUM DEFLECTION
2 SPANS SHUTTER

| | SHUTTER SPAN | | | | | | | |
|---|---|---|---|---|---|---|---|---|
| Pd | 66 | 60 | 54 | 48 | 42 | 36 | 30 | 24 |
| 30 | 0.9 | 0.8 | 0.7 | 0.6 | 0.6 | 0.5 | 0.4 | 0.3 |
| 45 | 1.0 | 1.1 | 1.1 | 1.0 | 0.9 | 0.7 | 0.6 | 0.5 |
| 55 | 0.7 | 0.9 | 1.0 | 1.2 | 1.0 | 0.9 | 0.7 | 0.6 |
| 65 | 0.4 | 0.6 | 0.8 | 1.0 | 1.1 | 1.1 | 0.9 | 0.7 |
| 75 | 0.3 | 0.4 | 0.5 | 0.8 | 1.0 | 1.1 | 1.0 | 0.8 |
| 85 | 0.2 | 0.3 | 0.4 | 0.5 | 0.8 | 1.0 | 1.1 | 0.9 |
| 95 | 0.1 | 0.2 | 0.3 | 0.4 | 0.5 | 0.9 | 1.0 | 1.0 |
| 105 | 0.1 | 0.1 | 0.2 | 0.3 | 0.4 | 0.6 | 1.0 | 1.1 |
| 115 | 0.1 | 0.1 | 0.1 | 0.2 | 0.3 | 0.5 | 0.9 | 1.1 |
| 125 | 0.1 | 0.1 | 0.1 | 0.2 | 0.2 | 0.4 | 0.7 | 1.0 |
| 135 | 0.0 | 0.1 | 0.1 | 0.1 | 0.2 | 0.3 | 0.5 | 0.9 |
| 145 | 0.0 | 0.1 | 0.1 | 0.1 | 0.1 | 0.2 | 0.4 | 0.9 |
| 155 | 0.0 | 0.0 | 0.1 | 0.1 | 0.1 | 0.2 | 0.4 | 0.7 |
| 165 | 0.0 | 0.0 | 0.0 | 0.1 | 0.1 | 0.2 | 0.3 | 0.6 |
| 175 | 0.0 | 0.0 | 0.0 | 0.1 | 0.1 | 0.1 | 0.2 | 0.5 |
| 185 | 0.0 | 0.0 | 0.0 | 0.0 | 0.1 | 0.1 | 0.2 | 0.4 |
| 195 | 0.0 | 0.0 | 0.0 | 0.0 | 0.1 | 0.1 | 0.2 | 0.3 |
| 255 | 0.0 | 0.0 | 0.0 | 0.0 | 0.0 | 0.0 | 0.1 | 0.2 |

STORM BAR MAXIMUM DEFLECTION
3 SPANS SHUTTER

| | SHUTTER SPAN | | | | | | | |
|---|---|---|---|---|---|---|---|---|
| Pd | 66 | 60 | 54 | 48 | 42 | 36 | 30 | 24 |
| 30 | 0.4 | 0.6 | 0.6 | 0.6 | 0.5 | 0.4 | 0.4 | 0.3 |
| 45 | 0.1 | 0.2 | 0.2 | 0.3 | 0.5 | 0.6 | 0.5 | 0.4 |
| 55 | 0.1 | 0.1 | 0.1 | 0.2 | 0.3 | 0.4 | 0.7 | 0.5 |
| 65 | 0.0 | 0.1 | 0.1 | 0.1 | 0.2 | 0.3 | 0.4 | 0.6 |
| 75 | 0.0 | 0.0 | 0.0 | 0.1 | 0.1 | 0.2 | 0.3 | 0.6 |
| 85 | 0.0 | 0.0 | 0.0 | 0.0 | 0.1 | 0.1 | 0.2 | 0.4 |
| 95 | 0.0 | 0.0 | 0.0 | 0.0 | 0.1 | 0.1 | 0.1 | 0.3 |
| 105 | 0.0 | 0.0 | 0.0 | 0.0 | 0.0 | 0.1 | 0.1 | 0.2 |
| 115 | 0.0 | 0.0 | 0.0 | 0.0 | 0.0 | 0.0 | 0.1 | 0.1 |
| 125 | 0.0 | 0.0 | 0.0 | 0.0 | 0.0 | 0.0 | 0.1 | 0.1 |
| 135 | 0.0 | 0.0 | 0.0 | 0.0 | 0.0 | 0.0 | 0.0 | 0.1 |
| 145 | 0.0 | 0.0 | 0.0 | 0.0 | 0.0 | 0.0 | 0.0 | 0.1 |
| 155 | 0.0 | 0.0 | 0.0 | 0.0 | 0.0 | 0.0 | 0.0 | 0.1 |
| 165 | 0.0 | 0.0 | 0.0 | 0.0 | 0.0 | 0.0 | 0.0 | 0.1 |
| 175 | 0.0 | 0.0 | 0.0 | 0.0 | 0.0 | 0.0 | 0.0 | 0.0 |
| 185 | 0.0 | 0.0 | 0.0 | 0.0 | 0.0 | 0.0 | 0.0 | 0.0 |
| 195 | 0.0 | 0.0 | 0.0 | 0.0 | 0.0 | 0.0 | 0.0 | 0.0 |
| 255 | 0.0 | 0.0 | 0.0 | 0.0 | 0.0 | 0.0 | 0.0 | 0.0 |

DEFLECTION IN INCHES BASED ON MAX. STORM BAR HEIGHT
STORM BAR HEIGHT IN INCHES
Pd- DESIGNED PRESSURE IN PSF
SHUTTER SPAN IN INCHES

NOTE: STORM BARS ALLOWABLE HEIGHT ARE CONTROLLED BY THE MAXIMUM ALLOWABLE HEADER END REACTION.


Manufacturer:
Alutech United, Inc
15 DIXON STREET
SELBYVILLE, DE 19975
Tel.: (302) 854-9100


Product:
RE1000
EXTRUDED ALUMINUM ROLL SHUTTERS


Engineering:
EngCo Inc.
CA 8116
6971 W. Sunrise Blvd. 104
Plantation, Fl. 33313
Tel.: (954) 585-0304


SEP 2 0 2001

Engineer Seal
Pedro De Figueiredo
PE 52609

Date: 8/5/01
Scale: NA
Design by: PPMF

Dade County NOA:
APPROVED AS COMPLYING WITH THE SOUTH FLORIDA BUILDING CODE
DATE 10/18/2001
BY
PRODUCT CONTROL DIVISION
BUILDING CODE COMPLIANCE OFFICE
ACCEPTANCE NO. 01-0507.01

Drawing Number
01-060R

# STORM BAR ANCHORAGE

### WALL MOUNTED STORM BARS ANCHORED TO CONCRETE OR WOOD

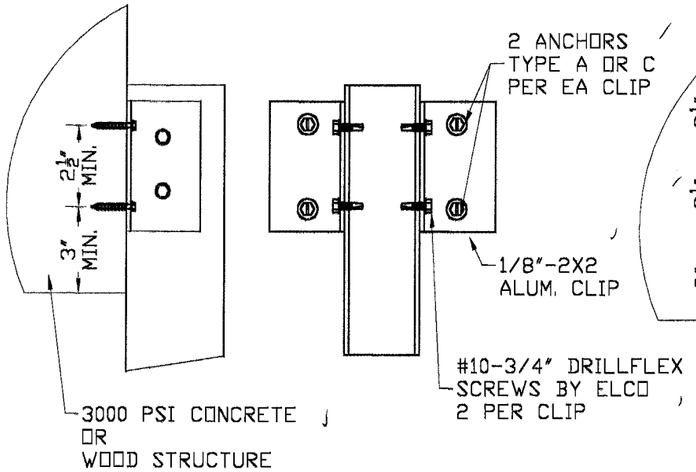


### WALL MOUNTED STORM BARS ANCHORED TO HOLLOW BLOCK WALL

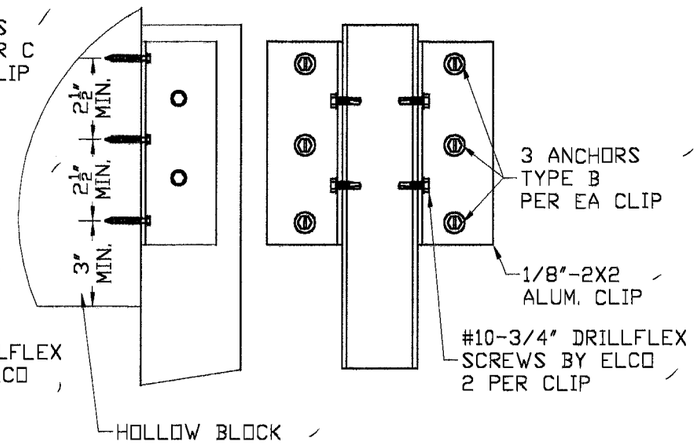


NOTE: ANCHORAGE IS CONTROLLED BY THE MAXIMUM STORM BAR HEIGHT SELECTION TABLES ON SHEETS 5 AND 6 OF 14

### FLOOR/CEILING MOUNTED STORM BARS ANCHORED TO CONCRETE SLAB

| Clip Size | 2 SPANS ALLOWABLE Pd (PSF) | 3 SPANS ALLOWABLE Pd (PSF) | (s) | STORM BARS |
|---|---|---|---|---|
| 2" | <= 30 | <= 30 | 1.5 | 2" |
| 3" | <= 75 | <=255 | 2.0 | 2" |
| 3" | <= 45 | <=255 | 2.0 | 3" |
| 4" | <=105 | <=255 | 3.0 | 3" |
| 4" | <= 65 | <=255 | 3.0 | 4" |
| 5" | <=255 | <=255 | 4.0 | 2", 3", 4", 5" |

Pd Allowable designed pressure

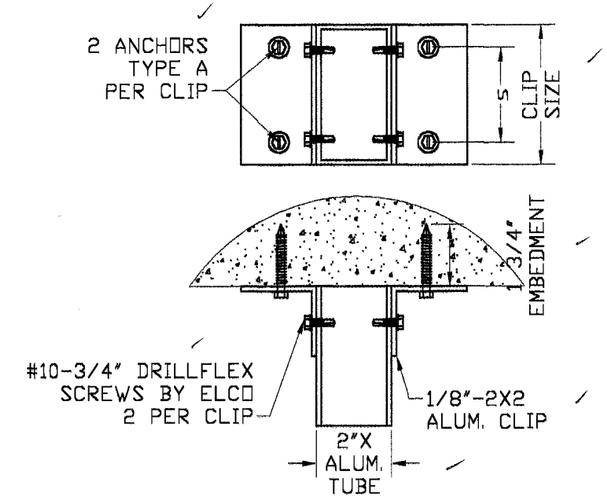


### STORM BARS MOUNTED ON BUILT-OUT ALUM. TUBE AND SHUTTER HEADER

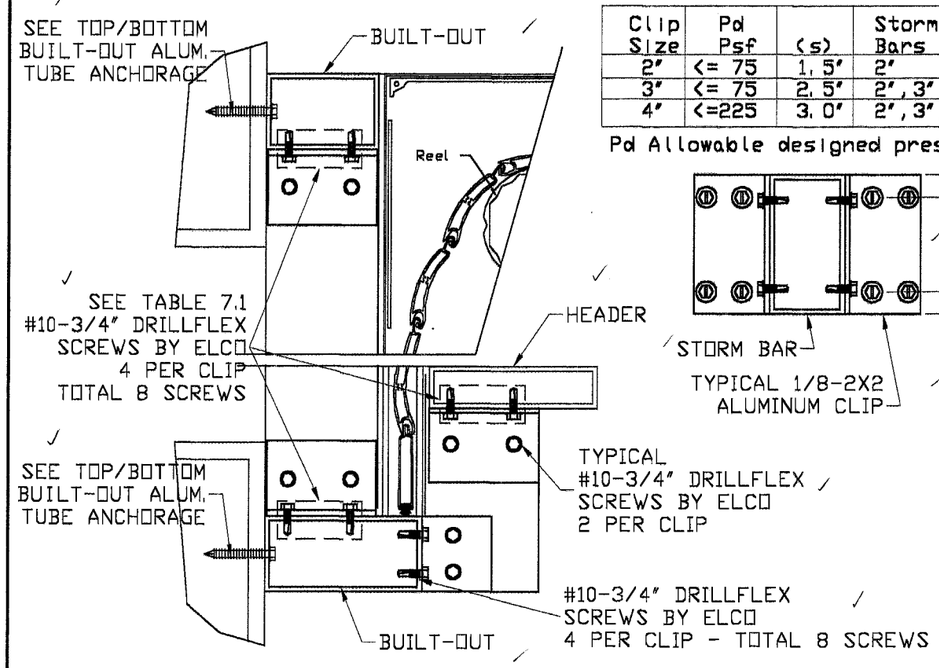


TABLE 7.1

| Clip Size | Pd Psf | (s) | Storm Bars |
|---|---|---|---|
| 2" | <= 75 | 1.5" | 2" |
| 3" | <= 75 | 2.5" | 2", 3" |
| 4" | <=225 | 3.0" | 2", 3", 4", 5" |

Pd Allowable designed pressure

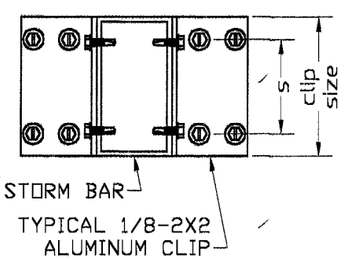


### ANCHOR SCHEDULE

| Type | Description | Embed. | Substract | Manufacturer |
|---|---|---|---|---|
| A | 1/4" Tapcon | 1 3/4" | Concrete | Elco |
| B | 1/4" Tapcon | 1 1/4" | Hollow Block | Elco |
| C | #14 SS Wood Screws | 1 1/2" | Wood (SG=.55) | Elco |

EDGE DISTANCE =3"

### TOP/BOTTOM BUILT-OUT ALUMINUM TUBE ANCHORAGE

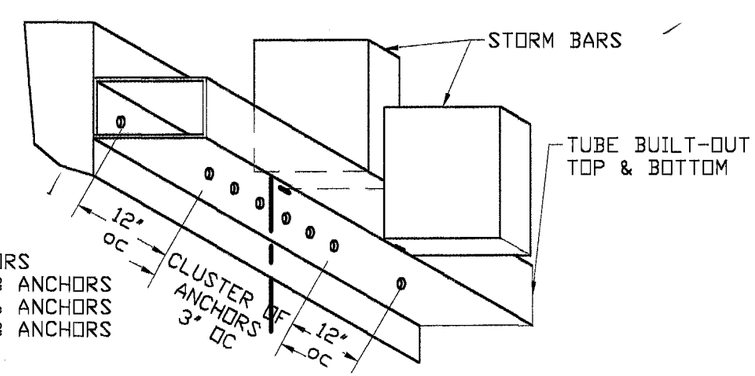


CLUSTER OF ANCHORS
TYPE A- MIN. OF 3 ANCHORS
TYPE B- MIN. OF 6 ANCHORS
TYPE C- MIN. OF 3 ANCHORS


Manufacturer:
Alutech United, Inc
15 DIXON STREET
SELBYVILLE, DE 19975
Tel.: (302) 854-9100


Product:
RE1000
EXTRUDED ALUMINUM ROLL SHUTTERS


Engineering:
EngCo Inc.
CA 8116
6971 W. Sunrise Blvd. 104
Plantation, Fl. 33313
Tel.: (954) 585-0304


SEP 2 0 2001
Engineer Seal
Pedro De Figueiredo
PE 52609

Date: 8/5/01
Scale: NA
Design by: PPMF

Dade County NOA:
APPROVED AS COMPLYING WITH THE SOUTH FLORIDA BUILDING CODE
DATE 10/18/2001
BY
PRODUCT CONTROL DIVISION
BUILDING CODE COMPLIANCE OFFICE
ACCEPTANCE NO.01-0507.01

Drawing Number
01-060R

# HEADER SELECTION AND DEFLECTION TABLES

## 1/8 2X2 STORM BAR

### HEADER SELECTION
2 SPANS SHUTTER

| | SHUTTER SPAN | | | | | | | |
|---|---|---|---|---|---|---|---|---|
| Pd | 66 | 60 | 54 | 48 | 42 | 36 | 30 | 24 |
| 30 | 2X4 | 2X3 | 2X3 | 2X3 | 2X2 | 2X2 | 2X2 | 2X2 |
| 45 | 2X4 | 2X4 | 2X3 | 2X3 | 2X3 | 2X2 | 2X2 | 2X2 |
| 55 | 2X4 | 2X4 | 2X4 | 2X3 | 2X3 | 2X2 | 2X2 | 2X2 |
| 65 | 2X4 | 2X4 | 2X4 | 2X3 | 2X3 | 2X3 | 2X2 | 2X2 |
| 75 | 2X5 | 2X4 | 2X4 | 2X4 | 2X3 | 2X3 | 2X2 | 2X2 |
| 85 | 2X5 | 2X4 | 2X4 | 2X4 | 2X3 | 2X3 | 2X2 | 2X2 |
| 95 | 2X5 | 2X5 | 2X4 | 2X4 | 2X3 | 2X3 | 2X2 | 2X2 |
| 105 | 2X5 | 2X5 | 2X4 | 2X4 | 2X3 | 2X3 | 2X3 | 2X2 |
| 115 | 2X5 | 2X5 | 2X4 | 2X4 | 2X4 | 2X3 | 2X3 | 2X2 |
| 125 | 2X5 | 2X5 | 2X5 | 2X4 | 2X4 | 2X3 | 2X3 | 2X2 |
| 135 | 2X6 | 2X5 | 2X5 | 2X4 | 2X4 | 2X3 | 2X3 | 2X2 |
| 145 | 2X6 | 2X5 | 2X5 | 2X4 | 2X4 | 2X3 | 2X3 | 2X2 |
| 155 | 2X6 | 2X5 | 2X5 | 2X4 | 2X4 | 2X3 | 2X3 | 2X2 |
| 165 | 2X6 | 2X5 | 2X5 | 2X4 | 2X4 | 2X3 | 2X3 | 2X2 |
| 175 | 2X6 | 2X6 | 2X5 | 2X4 | 2X4 | 2X4 | 2X3 | 2X2 |
| 185 | 2X6 | 2X6 | 2X5 | 2X5 | 2X4 | 2X4 | 2X3 | 2X2 |
| 195 | 2X6 | 2X6 | 2X5 | 2X5 | 2X4 | 2X4 | 2X3 | 2X3 |
| 255 | 2X6 | 2X6 | 2X6 | 2X5 | 2X4 | 2X4 | 2X3 | 2X3 |

### HEADER SELECTION
3 SPANS SHUTTER

| | SHUTTER SPAN | | | | | | | |
|---|---|---|---|---|---|---|---|---|
| Pd | 66 | 60 | 54 | 48 | 42 | 36 | 30 | 24 |
| 30 | 2X6 | 2X6 | 2X5 | 2X4 | 2X4 | 2X3 | 2X2 | 2X2 |
| 45 | NA | 2X6 | 2X5 | 2X5 | 2X4 | 2X3 | 2X3 | 2X2 |
| 55 | NA | 2X6 | 2X6 | 2X5 | 2X4 | 2X4 | 2X3 | 2X3 |
| 65 | NA | 2X6 | 2X6 | 2X5 | 2X4 | 2X4 | 2X3 | 2X3 |
| 75 | NA | 2X6 | 2X6 | 2X5 | 2X5 | 2X4 | 2X3 | 2X3 |
| 85 | NA | 2X6 | 2X6 | 2X5 | 2X5 | 2X4 | 2X3 | 2X3 |
| 95 | NA | 2X6 | 2X6 | 2X5 | 2X5 | 2X4 | 2X4 | 2X3 |
| 105 | NA | 2X6 | 2X6 | 2X5 | 2X5 | 2X4 | 2X4 | 2X3 |
| 115 | NA | 2X6 | 2X6 | 2X5 | 2X5 | 2X4 | 2X4 | 2X3 |
| 125 | NA | 2X6 | 2X6 | 2X5 | 2X5 | 2X4 | 2X4 | 2X3 |
| 135 | NA | 2X6 | 2X6 | 2X5 | 2X5 | 2X4 | 2X4 | 2X3 |
| 145 | NA | 2X6 | 2X6 | 2X5 | 2X5 | 2X4 | 2X4 | 2X3 |
| 155 | NA | 2X6 | 2X6 | 2X5 | 2X5 | 2X4 | 2X4 | 2X3 |
| 165 | NA | 2X6 | 2X6 | 2X5 | 2X5 | 2X4 | 2X4 | 2X3 |
| 175 | NA | 2X6 | 2X6 | 2X5 | 2X5 | 2X4 | 2X4 | 2X3 |
| 185 | NA | 2X6 | 2X6 | 2X5 | 2X5 | 2X4 | 2X4 | 2X3 |
| 195 | NA | 2X6 | 2X6 | 2X5 | 2X5 | 2X4 | 2X4 | 2X3 |
| 255 | NA | 2X6 | 2X6 | 2X5 | 2X5 | 2X4 | 2X4 | 2X3 |

### MAXIMUM HEADER DEFLECTION
2 SPANS SHUTTER

| | SHUTTER SPAN | | | | | | | |
|---|---|---|---|---|---|---|---|---|
| Pd | 66 | 60 | 54 | 48 | 42 | 36 | 30 | 24 |
| 30 | 1.0 | 1.4 | 1.0 | 0.7 | 1.1 | 0.6 | 0.3 | 0.1 |
| 45 | 1.2 | 0.9 | 1.2 | 0.8 | 0.5 | 0.8 | 0.4 | 0.2 |
| 55 | 1.3 | 1.0 | 0.7 | 0.9 | 0.6 | 0.9 | 0.5 | 0.2 |
| 65 | 1.4 | 1.0 | 0.7 | 1.0 | 0.6 | 0.3 | 0.5 | 0.2 |
| 75 | 0.9 | 1.1 | 0.8 | 0.5 | 0.6 | 0.4 | 0.5 | 0.2 |
| 85 | 0.9 | 1.2 | 0.8 | 0.5 | 0.7 | 0.4 | 0.6 | 0.3 |
| 95 | 1.0 | 0.7 | 0.9 | 0.6 | 0.7 | 0.4 | 0.6 | 0.3 |
| 105 | 1.1 | 0.8 | 0.9 | 0.6 | 0.8 | 0.4 | 0.2 | 0.3 |
| 115 | 1.1 | 0.8 | 0.9 | 0.6 | 0.4 | 0.5 | 0.2 | 0.3 |
| 125 | 1.2 | 0.8 | 0.6 | 0.7 | 0.4 | 0.5 | 0.3 | 0.3 |
| 135 | 0.7 | 0.9 | 0.6 | 0.7 | 0.4 | 0.5 | 0.3 | 0.3 |
| 145 | 0.8 | 0.9 | 0.6 | 0.7 | 0.4 | 0.5 | 0.3 | 0.3 |
| 155 | 0.8 | 0.9 | 0.6 | 0.7 | 0.5 | 0.5 | 0.3 | 0.4 |
| 165 | 0.8 | 1.0 | 0.6 | 0.7 | 0.5 | 0.6 | 0.3 | 0.4 |
| 175 | 0.8 | 0.6 | 0.7 | 0.8 | 0.5 | 0.3 | 0.3 | 0.4 |
| 185 | 0.9 | 0.6 | 0.7 | 0.5 | 0.5 | 0.3 | 0.3 | 0.4 |
| 195 | 0.9 | 0.6 | 0.7 | 0.5 | 0.5 | 0.3 | 0.3 | 0.1 |
| 255 | 0.9 | 0.7 | 0.5 | 0.5 | 0.6 | 0.3 | 0.4 | 0.2 |

### MAXIMUM HEADER DEFLECTION
3 SPANS SHUTTER

| | SHUTTER SPAN | | | | | | | |
|---|---|---|---|---|---|---|---|---|
| Pd | 66 | 60 | 54 | 48 | 42 | 36 | 30 | 24 |
| 30 | 1.9 | 1.4 | 1.5 | 1.7 | 1.1 | 1.3 | 1.7 | 0.7 |
| 45 | NA | 1.7 | 1.8 | 1.2 | 1.3 | 1.6 | 0.8 | 1.0 |
| 55 | NA | 1.9 | 1.3 | 1.4 | 1.5 | 0.9 | 0.9 | 0.4 |
| 65 | NA | 1.9 | 1.4 | 1.5 | 1.6 | 0.9 | 1.0 | 0.5 |
| 75 | NA | 1.9 | 1.4 | 1.6 | 1.0 | 1.0 | 1.1 | 0.5 |
| 85 | NA | 1.9 | 1.4 | 1.6 | 1.0 | 1.1 | 1.1 | 0.5 |
| 95 | NA | 1.9 | 1.4 | 1.6 | 1.1 | 1.1 | 0.6 | 0.6 |
| 105 | NA | 1.9 | 1.4 | 1.6 | 1.1 | 1.1 | 0.6 | 0.6 |
| 115 | NA | 1.9 | 1.4 | 1.5 | 1.1 | 1.2 | 0.7 | 0.6 |
| 125 | NA | 1.9 | 1.4 | 1.5 | 1.0 | 1.2 | 0.7 | 0.6 |
| 135 | NA | 1.9 | 1.4 | 1.6 | 1.0 | 1.1 | 0.7 | 0.7 |
| 145 | NA | 1.9 | 1.4 | 1.6 | 1.0 | 1.2 | 0.7 | 0.7 |
| 155 | NA | 1.9 | 1.4 | 1.6 | 1.1 | 1.2 | 0.7 | 0.7 |
| 165 | NA | 1.9 | 1.4 | 1.5 | 1.0 | 1.2 | 0.7 | 0.7 |
| 175 | NA | 1.9 | 1.4 | 1.6 | 1.0 | 1.2 | 0.7 | 0.7 |
| 185 | NA | 1.9 | 1.4 | 1.5 | 1.1 | 1.1 | 0.7 | 0.7 |
| 195 | NA | 1.9 | 1.4 | 1.5 | 1.0 | 1.2 | 0.7 | 0.7 |
| 255 | NA | 1.9 | 1.3 | 1.5 | 1.1 | 1.2 | 0.7 | 0.7 |

DEFLECTION IN INCHES BASED ON HEADER SELECTION
Pd- DESIGNED PRESSURE IN PSF
SHUTTER SPAN IN INCHES

## 1/8 2X3 STORM BAR

### HEADER SELECTION
2 SPANS SHUTTER

| | SHUTTER SPAN | | | | | | | |
|---|---|---|---|---|---|---|---|---|
| Pd | 66 | 60 | 54 | 48 | 42 | 36 | 30 | 24 |
| 30 | 2X4 | 2X4 | 2X4 | 2X3 | 2X3 | 2X2 | 2X2 | 2X2 |
| 45 | 2X5 | 2X4 | 2X4 | 2X4 | 2X3 | 2X3 | 2X2 | 2X2 |
| 55 | 2X5 | 2X5 | 2X4 | 2X4 | 2X3 | 2X3 | 2X3 | 2X2 |
| 65 | 2X5 | 2X5 | 2X4 | 2X4 | 2X4 | 2X3 | 2X3 | 2X2 |
| 75 | 2X6 | 2X5 | 2X5 | 2X4 | 2X4 | 2X3 | 2X3 | 2X2 |
| 85 | 2X6 | 2X5 | 2X5 | 2X4 | 2X4 | 2X3 | 2X3 | 2X2 |
| 95 | 2X6 | 2X5 | 2X5 | 2X4 | 2X4 | 2X3 | 2X3 | 2X2 |
| 105 | 2X6 | 2X6 | 2X5 | 2X5 | 2X4 | 2X4 | 2X3 | 2X3 |
| 115 | 2X6 | 2X6 | 2X5 | 2X5 | 2X4 | 2X4 | 2X3 | 2X3 |
| 125 | 2X6 | 2X6 | 2X5 | 2X5 | 2X4 | 2X4 | 2X3 | 2X3 |
| 135 | 2X6 | 2X6 | 2X6 | 2X5 | 2X4 | 2X4 | 2X3 | 2X3 |
| 145 | 2X6 | 2X6 | 2X5 | 2X5 | 2X5 | 2X4 | 2X3 | 2X3 |
| 155 | 2X6 | 2X6 | 2X5 | 2X5 | 2X5 | 2X4 | 2X3 | 2X3 |
| 165 | 2X6 | 2X6 | 2X6 | 2X5 | 2X5 | 2X4 | 2X3 | 2X3 |
| 175 | 2X6 | 2X6 | 2X5 | 2X5 | 2X5 | 2X4 | 2X4 | 2X3 |
| 185 | 2X6 | 2X6 | 2X5 | 2X5 | 2X5 | 2X4 | 2X4 | 2X3 |
| 195 | 2X6 | 2X6 | 2X6 | 2X5 | 2X5 | 2X4 | 2X4 | 2X3 |
| 255 | 2X6 | 2X6 | 2X6 | 2X5 | 2X5 | 2X4 | 2X4 | 2X3 |

### HEADER SELECTION
3 SPANS SHUTTER

| | SHUTTER SPAN | | | | | | | |
|---|---|---|---|---|---|---|---|---|
| Pd | 66 | 60 | 54 | 48 | 42 | 36 | 30 | 24 |
| 30 | NA | 2X6 | 2X6 | 2X5 | 2X4 | 2X3 | 2X3 | 2X2 |
| 45 | NA | 2X6 | 2X6 | 2X5 | 2X5 | 2X4 | 2X3 | 2X3 |
| 55 | NA | 2X6 | 2X6 | 2X5 | 2X5 | 2X4 | 2X4 | 2X3 |
| 65 | NA | 2X6 | 2X6 | 2X5 | 2X5 | 2X4 | 2X4 | 2X3 |
| 75 | NA | 2X6 | 2X6 | 2X5 | 2X5 | 2X4 | 2X4 | 2X3 |
| 85 | NA | 2X6 | 2X6 | 2X5 | 2X5 | 2X4 | 2X4 | 2X3 |
| 95 | NA | 2X6 | 2X6 | 2X5 | 2X5 | 2X4 | 2X4 | 2X3 |
| 105 | NA | 2X6 | 2X6 | 2X5 | 2X5 | 2X4 | 2X4 | 2X3 |
| 115 | NA | 2X6 | 2X6 | 2X5 | 2X5 | 2X4 | 2X4 | 2X3 |
| 125 | NA | 2X6 | 2X6 | 2X5 | 2X5 | 2X4 | 2X4 | 2X3 |
| 135 | NA | 2X6 | 2X6 | 2X5 | 2X5 | 2X4 | 2X4 | 2X3 |
| 145 | NA | 2X6 | 2X6 | 2X5 | 2X5 | 2X4 | 2X4 | 2X3 |
| 155 | NA | 2X6 | 2X6 | 2X5 | 2X5 | 2X4 | 2X4 | 2X3 |
| 165 | NA | 2X6 | 2X6 | 2X5 | 2X5 | 2X4 | 2X4 | 2X3 |
| 175 | NA | 2X6 | 2X6 | 2X5 | 2X5 | 2X4 | 2X4 | 2X3 |
| 185 | NA | 2X6 | 2X6 | 2X5 | 2X5 | 2X4 | 2X4 | 2X3 |
| 195 | NA | 2X6 | 2X6 | 2X5 | 2X5 | 2X4 | 2X4 | 2X3 |
| 255 | NA | 2X6 | 2X6 | 2X5 | 2X5 | 2X4 | 2X4 | 2X3 |

### MAXIMUM HEADER DEFLECTION
2 SPANS SHUTTER

| | SHUTTER SPAN | | | | | | | |
|---|---|---|---|---|---|---|---|---|
| Pd | 66 | 60 | 54 | 48 | 42 | 36 | 30 | 24 |
| 30 | 1.3 | 0.9 | 0.7 | 0.9 | 0.5 | 0.8 | 0.4 | 0.2 |
| 45 | 0.9 | 1.1 | 0.8 | 0.5 | 0.7 | 0.4 | 0.6 | 0.2 |
| 55 | 1.0 | 0.7 | 0.9 | 0.6 | 0.7 | 0.4 | 0.2 | 0.3 |
| 65 | 1.1 | 0.8 | 1.0 | 0.6 | 0.4 | 0.5 | 0.2 | 0.3 |
| 75 | 0.7 | 0.9 | 0.6 | 0.7 | 0.4 | 0.5 | 0.3 | 0.3 |
| 85 | 0.8 | 0.9 | 0.6 | 0.7 | 0.5 | 0.5 | 0.3 | 0.3 |
| 95 | 0.8 | 1.0 | 0.7 | 0.8 | 0.5 | 0.6 | 0.3 | 0.4 |
| 105 | 0.9 | 0.6 | 0.7 | 0.5 | 0.5 | 0.3 | 0.3 | 0.1 |
| 115 | 0.9 | 0.7 | 0.7 | 0.5 | 0.5 | 0.3 | 0.3 | 0.2 |
| 125 | 0.9 | 0.7 | 0.8 | 0.5 | 0.5 | 0.3 | 0.3 | 0.2 |
| 135 | 0.9 | 0.7 | 0.5 | 0.5 | 0.6 | 0.3 | 0.4 | 0.2 |
| 145 | 0.9 | 0.7 | 0.8 | 0.5 | 0.3 | 0.3 | 0.4 | 0.2 |
| 155 | 0.9 | 0.7 | 0.8 | 0.5 | 0.3 | 0.4 | 0.4 | 0.2 |
| 165 | 0.9 | 0.7 | 0.5 | 0.5 | 0.4 | 0.4 | 0.4 | 0.2 |
| 175 | 0.9 | 0.7 | 0.8 | 0.5 | 0.4 | 0.4 | 0.2 | 0.2 |
| 185 | 0.9 | 0.7 | 0.8 | 0.5 | 0.4 | 0.4 | 0.2 | 0.2 |
| 195 | 0.9 | 0.7 | 0.5 | 0.5 | 0.4 | 0.4 | 0.2 | 0.2 |
| 255 | 0.9 | 0.7 | 0.5 | 0.5 | 0.4 | 0.4 | 0.2 | 0.2 |

### MAXIMUM HEADER DEFLECTION
3 SPANS SHUTTER

| | SHUTTER SPAN | | | | | | | |
|---|---|---|---|---|---|---|---|---|
| Pd | 66 | 60 | 54 | 48 | 42 | 36 | 30 | 24 |
| 30 | NA | 1.8 | 1.3 | 1.3 | 1.4 | 1.5 | 0.7 | 0.8 |
| 45 | NA | 1.9 | 1.4 | 1.6 | 1.0 | 1.0 | 1.1 | 0.4 |
| 55 | NA | 1.9 | 1.4 | 1.6 | 1.1 | 1.1 | 0.6 | 0.5 |
| 65 | NA | 1.9 | 1.4 | 1.6 | 1.1 | 1.2 | 0.7 | 0.6 |
| 75 | NA | 1.9 | 1.4 | 1.6 | 1.1 | 1.2 | 0.7 | 0.7 |
| 85 | NA | 1.9 | 1.4 | 1.6 | 1.1 | 1.2 | 0.7 | 0.7 |
| 95 | NA | 1.9 | 1.4 | 1.6 | 1.1 | 1.2 | 0.7 | 0.7 |
| 105 | NA | 1.9 | 1.4 | 1.6 | 1.1 | 1.1 | 0.7 | 0.7 |
| 115 | NA | 1.9 | 1.4 | 1.5 | 1.1 | 1.2 | 0.7 | 0.7 |
| 125 | NA | 1.9 | 1.4 | 1.5 | 1.0 | 1.2 | 0.7 | 0.7 |
| 135 | NA | 1.9 | 1.4 | 1.6 | 1.0 | 1.1 | 0.7 | 0.7 |
| 145 | NA | 1.9 | 1.4 | 1.6 | 1.0 | 1.2 | 0.7 | 0.7 |
| 155 | NA | 1.9 | 1.4 | 1.6 | 1.1 | 1.2 | 0.7 | 0.7 |
| 165 | NA | 1.9 | 1.4 | 1.5 | 1.0 | 1.2 | 0.7 | 0.7 |
| 175 | NA | 1.9 | 1.4 | 1.6 | 1.0 | 1.2 | 0.7 | 0.7 |
| 185 | NA | 1.9 | 1.4 | 1.5 | 1.1 | 1.1 | 0.7 | 0.7 |
| 195 | NA | 1.9 | 1.4 | 1.5 | 1.0 | 1.2 | 0.7 | 0.7 |
| 255 | NA | 1.9 | 1.3 | 1.5 | 1.1 | 1.2 | 0.7 | 0.7 |

DEFLECTION IN INCHES BASED ON HEADER SELECTION
Pd- DESIGNED PRESSURE IN PSF
SHUTTER SPAN IN INCHES

NOTE: HEADER SELECTION AND DEFLECTION ARE CONTROLLED BY THE MAXIMUM ALLOWABLE STORM BARS HEIGHT TABLES ON SHEETS 5 AND 6 OF 14


Manufacturer:
Alutech United, Inc
15 DIXON STREET
SELBYVILLE, DE 19975
Tel.: (302) 854-9100


Product:
RE1000
EXTRUDED ALUMINUM ROLL SHUTTERS


Engineering:
EngCo Inc.
CA 8116
6971 W. Sunrise Blvd. 104
Plantation, Fl. 33313
Tel.: (954) 585-0304


SEP 2 0 2001

Engineer Seal
Pedro De Figueiredo
PE 52609

Date: 8/5/01
Scale: NA
Design by: PPMF

Dade County NOA:
APPROVED AS COMPLYING WITH THE SOUTH FLORIDA BUILDING CODE
DATE 10/18/2001
BY
PRODUCT CONTROL DIVISION
BUILDING CODE COMPLIANCE OFFICE
ACCEPTANCE NO. 01-0507.01

Drawing Number
01-060R

# HEADER SELECTION AND DEFLECTION TABLES

## 1/8 2X4 STORM BAR

### HEADER SELECTION
2 SPANS SHUTTER

| | SHUTTER SPAN | | | | | | | |
|---|---|---|---|---|---|---|---|---|
| Pd | 66 | 60 | 54 | 48 | 42 | 36 | 30 | 24 |
| 30 | 2X5 | 2X4 | 2X4 | 2X3 | 2X3 | 2X2 | 2X2 | 2X2 |
| 45 | 2X5 | 2X5 | 2X5 | 2X4 | 2X4 | 2X3 | 2X2 | 2X2 |
| 55 | 2X6 | 2X5 | 2X5 | 2X4 | 2X4 | 2X3 | 2X3 | 2X2 |
| 65 | 2X6 | 2X6 | 2X5 | 2X5 | 2X4 | 2X3 | 2X3 | 2X2 |
| 75 | 2X6 | 2X6 | 2X5 | 2X5 | 2X4 | 2X4 | 2X3 | 2X3 |
| 85 | 2X6 | 2X6 | 2X5 | 2X5 | 2X4 | 2X4 | 2X3 | 2X3 |
| 95 | 2X6 | 2X6 | 2X5 | 2X5 | 2X5 | 2X4 | 2X3 | 2X3 |
| 105 | 2X6 | 2X6 | 2X6 | 2X5 | 2X5 | 2X4 | 2X3 | 2X3 |
| 115 | 2X6 | 2X6 | 2X5 | 2X5 | 2X5 | 2X4 | 2X4 | 2X3 |
| 125 | 2X6 | 2X6 | 2X6 | 2X5 | 2X5 | 2X4 | 2X4 | 2X3 |
| 135 | 2X6 | 2X6 | 2X6 | 2X5 | 2X5 | 2X4 | 2X4 | 2X3 |
| 145 | 2X6 | 2X6 | 2X5 | 2X5 | 2X5 | 2X4 | 2X4 | 2X3 |
| 155 | 2X6 | 2X6 | 2X5 | 2X5 | 2X5 | 2X4 | 2X4 | 2X3 |
| 165 | 2X6 | 2X6 | 2X6 | 2X5 | 2X5 | 2X4 | 2X4 | 2X3 |
| 175 | 2X6 | 2X6 | 2X5 | 2X5 | 2X5 | 2X4 | 2X4 | 2X3 |
| 185 | 2X6 | 2X6 | 2X5 | 2X5 | 2X5 | 2X4 | 2X4 | 2X3 |
| 195 | 2X6 | 2X6 | 2X6 | 2X5 | 2X5 | 2X4 | 2X4 | 2X3 |
| 255 | 2X6 | 2X6 | 2X6 | 2X5 | 2X5 | 2X4 | 2X4 | 2X3 |

### HEADER SELECTION
3 SPANS SHUTTER

| | SHUTTER SPAN | | | | | | | |
|---|---|---|---|---|---|---|---|---|
| Pd | 66 | 60 | 54 | 48 | 42 | 36 | 30 | 24 |
| 30 | NA | 2X6 | 2X6 | 2X5 | 2X4 | 2X3 | 2X3 | 2X2 |
| 45 | NA | 2X6 | 2X6 | 2X5 | 2X5 | 2X4 | 2X3 | 2X3 |
| 55 | NA | 2X6 | 2X6 | 2X5 | 2X5 | 2X4 | 2X4 | 2X3 |
| 65 | NA | 2X6 | 2X6 | 2X5 | 2X5 | 2X4 | 2X4 | 2X3 |
| 75 | NA | 2X6 | 2X6 | 2X5 | 2X5 | 2X4 | 2X4 | 2X3 |
| 85 | NA | 2X6 | 2X6 | 2X5 | 2X5 | 2X4 | 2X4 | 2X3 |
| 95 | NA | 2X6 | 2X6 | 2X5 | 2X5 | 2X4 | 2X4 | 2X3 |
| 105 | NA | 2X6 | 2X6 | 2X5 | 2X5 | 2X4 | 2X4 | 2X3 |
| 115 | NA | 2X6 | 2X6 | 2X5 | 2X5 | 2X4 | 2X4 | 2X3 |
| 125 | NA | 2X6 | 2X6 | 2X5 | 2X5 | 2X4 | 2X4 | 2X3 |
| 135 | NA | 2X6 | 2X6 | 2X5 | 2X5 | 2X4 | 2X4 | 2X3 |
| 145 | NA | 2X6 | 2X6 | 2X5 | 2X5 | 2X4 | 2X4 | 2X3 |
| 155 | NA | 2X6 | 2X6 | 2X5 | 2X5 | 2X4 | 2X4 | 2X3 |
| 165 | NA | 2X6 | 2X6 | 2X5 | 2X5 | 2X4 | 2X4 | 2X3 |
| 175 | NA | 2X6 | 2X6 | 2X5 | 2X5 | 2X4 | 2X4 | 2X3 |
| 185 | NA | 2X6 | 2X6 | 2X5 | 2X5 | 2X4 | 2X4 | 2X3 |
| 195 | NA | 2X6 | 2X6 | 2X5 | 2X5 | 2X4 | 2X4 | 2X3 |
| 255 | NA | 2X6 | 2X6 | 2X5 | 2X5 | 2X4 | 2X4 | 2X3 |

### MAXIMUM HEADER DEFLECTION
2 SPANS SHUTTER

| | SHUTTER SPAN | | | | | | | |
|---|---|---|---|---|---|---|---|---|
| Pd | 66 | 60 | 54 | 48 | 42 | 36 | 30 | 24 |
| 30 | 0.9 | 1.1 | 0.7 | 0.9 | 0.6 | 0.8 | 0.4 | 0.2 |
| 45 | 1.1 | 0.8 | 0.6 | 0.6 | 0.4 | 0.4 | 0.6 | 0.2 |
| 55 | 0.8 | 0.9 | 0.6 | 0.7 | 0.4 | 0.5 | 0.3 | 0.3 |
| 65 | 0.9 | 0.6 | 0.7 | 0.4 | 0.5 | 0.6 | 0.3 | 0.3 |
| 75 | 0.9 | 0.7 | 0.7 | 0.5 | 0.5 | 0.3 | 0.3 | 0.1 |
| 85 | 0.9 | 0.7 | 0.8 | 0.5 | 0.6 | 0.3 | 0.3 | 0.2 |
| 95 | 0.9 | 0.7 | 0.8 | 0.5 | 0.3 | 0.3 | 0.4 | 0.2 |
| 105 | 0.9 | 0.7 | 0.5 | 0.6 | 0.4 | 0.4 | 0.4 | 0.2 |
| 115 | 0.9 | 0.7 | 0.8 | 0.6 | 0.4 | 0.4 | 0.2 | 0.2 |
| 125 | 0.9 | 0.7 | 0.5 | 0.5 | 0.4 | 0.4 | 0.2 | 0.2 |
| 135 | 0.9 | 0.7 | 0.5 | 0.5 | 0.4 | 0.4 | 0.2 | 0.2 |
| 145 | 0.9 | 0.7 | 0.8 | 0.5 | 0.4 | 0.4 | 0.2 | 0.2 |
| 155 | 0.9 | 0.7 | 0.8 | 0.5 | 0.4 | 0.4 | 0.2 | 0.2 |
| 165 | 0.9 | 0.7 | 0.5 | 0.5 | 0.4 | 0.4 | 0.2 | 0.2 |
| 175 | 0.9 | 0.7 | 0.8 | 0.5 | 0.4 | 0.4 | 0.2 | 0.2 |
| 185 | 0.9 | 0.7 | 0.8 | 0.5 | 0.4 | 0.4 | 0.2 | 0.2 |
| 195 | 0.9 | 0.7 | 0.5 | 0.5 | 0.4 | 0.4 | 0.2 | 0.2 |
| 255 | 0.9 | 0.7 | 0.5 | 0.5 | 0.4 | 0.4 | 0.2 | 0.2 |

### MAXIMUM HEADER DEFLECTION
3 SPANS SHUTTER

| | SHUTTER SPAN | | | | | | | |
|---|---|---|---|---|---|---|---|---|
| Pd | 66 | 60 | 54 | 48 | 42 | 36 | 30 | 24 |
| 30 | NA | 1.9 | 1.4 | 1.3 | 1.4 | 1.5 | 0.7 | 0.8 |
| 45 | NA | 1.9 | 1.4 | 1.6 | 1.1 | 1.1 | 1.1 | 0.4 |
| 55 | NA | 1.9 | 1.4 | 1.6 | 1.1 | 1.2 | 0.7 | 0.5 |
| 65 | NA | 1.9 | 1.4 | 1.6 | 1.1 | 1.2 | 0.7 | 0.6 |
| 75 | NA | 1.9 | 1.4 | 1.6 | 1.1 | 1.2 | 0.7 | 0.7 |
| 85 | NA | 1.9 | 1.4 | 1.6 | 1.1 | 1.2 | 0.7 | 0.7 |
| 95 | NA | 1.9 | 1.4 | 1.6 | 1.1 | 1.2 | 0.7 | 0.7 |
| 105 | NA | 1.9 | 1.4 | 1.6 | 1.1 | 1.1 | 0.7 | 0.7 |
| 115 | NA | 1.9 | 1.4 | 1.5 | 1.1 | 1.2 | 0.7 | 0.7 |
| 125 | NA | 1.9 | 1.4 | 1.5 | 1.0 | 1.2 | 0.7 | 0.7 |
| 135 | NA | 1.9 | 1.4 | 1.6 | 1.0 | 1.1 | 0.7 | 0.7 |
| 145 | NA | 1.9 | 1.4 | 1.6 | 1.0 | 1.2 | 0.7 | 0.7 |
| 155 | NA | 1.9 | 1.4 | 1.6 | 1.1 | 1.2 | 0.7 | 0.7 |
| 165 | NA | 1.9 | 1.4 | 1.5 | 1.0 | 1.2 | 0.7 | 0.7 |
| 175 | NA | 1.9 | 1.4 | 1.6 | 1.0 | 1.2 | 0.7 | 0.7 |
| 185 | NA | 1.9 | 1.4 | 1.5 | 1.1 | 1.1 | 0.7 | 0.7 |
| 195 | NA | 1.9 | 1.4 | 1.5 | 1.0 | 1.2 | 0.7 | 0.7 |
| 255 | NA | 1.9 | 1.3 | 1.5 | 1.1 | 1.2 | 0.7 | 0.7 |

DEFLECTION IN INCHES BASED ON HEADER SELECTION
Pd- DESIGNED PRESSURE IN PSF
SHUTTER SPAN IN INCHES

## 1/8 2X5 STORM BAR

### HEADER SELECTION
2 SPANS SHUTTER

| | SHUTTER SPAN | | | | | | | |
|---|---|---|---|---|---|---|---|---|
| Pd | 66 | 60 | 54 | 48 | 42 | 36 | 30 | 24 |
| 30 | 2X5 | 2X4 | 2X4 | 2X3 | 2X3 | 2X2 | 2X2 | 2X2 |
| 45 | 2X6 | 2X5 | 2X5 | 2X4 | 2X4 | 2X3 | 2X2 | 2X2 |
| 55 | 2X6 | 2X6 | 2X5 | 2X5 | 2X4 | 2X3 | 2X3 | 2X2 |
| 65 | 2X6 | 2X6 | 2X6 | 2X5 | 2X4 | 2X4 | 2X3 | 2X2 |
| 75 | 2X6 | 2X6 | 2X6 | 2X5 | 2X5 | 2X4 | 2X3 | 2X3 |
| 85 | 2X6 | 2X6 | 2X6 | 2X5 | 2X5 | 2X4 | 2X4 | 2X3 |
| 95 | 2X6 | 2X6 | 2X5 | 2X5 | 2X5 | 2X4 | 2X4 | 2X3 |
| 105 | 2X6 | 2X6 | 2X6 | 2X5 | 2X5 | 2X4 | 2X4 | 2X3 |
| 115 | 2X6 | 2X6 | 2X5 | 2X5 | 2X5 | 2X4 | 2X4 | 2X3 |
| 125 | 2X6 | 2X6 | 2X6 | 2X5 | 2X5 | 2X4 | 2X4 | 2X3 |
| 135 | 2X6 | 2X6 | 2X6 | 2X5 | 2X5 | 2X4 | 2X4 | 2X3 |
| 145 | 2X6 | 2X6 | 2X5 | 2X5 | 2X5 | 2X4 | 2X4 | 2X3 |
| 155 | 2X6 | 2X6 | 2X5 | 2X5 | 2X5 | 2X4 | 2X4 | 2X3 |
| 165 | 2X6 | 2X6 | 2X6 | 2X5 | 2X5 | 2X4 | 2X4 | 2X3 |
| 175 | 2X6 | 2X6 | 2X5 | 2X5 | 2X5 | 2X4 | 2X4 | 2X3 |
| 185 | 2X6 | 2X6 | 2X5 | 2X5 | 2X5 | 2X4 | 2X4 | 2X3 |
| 195 | 2X6 | 2X6 | 2X6 | 2X5 | 2X5 | 2X4 | 2X4 | 2X3 |
| 255 | 2X6 | 2X6 | 2X6 | 2X5 | 2X5 | 2X4 | 2X4 | 2X3 |

### HEADER SELECTION
3 SPANS SHUTTER

| | SHUTTER SPAN | | | | | | | |
|---|---|---|---|---|---|---|---|---|
| Pd | 66 | 60 | 54 | 48 | 42 | 36 | 30 | 24 |
| 30 | NA | 2X6 | 2X6 | 2X5 | 2X4 | 2X3 | 2X3 | 2X2 |
| 45 | NA | 2X6 | 2X6 | 2X5 | 2X5 | 2X4 | 2X3 | 2X3 |
| 55 | NA | 2X6 | 2X6 | 2X5 | 2X5 | 2X4 | 2X4 | 2X3 |
| 65 | NA | 2X6 | 2X6 | 2X5 | 2X5 | 2X4 | 2X4 | 2X3 |
| 75 | NA | 2X6 | 2X6 | 2X5 | 2X5 | 2X4 | 2X4 | 2X3 |
| 85 | NA | 2X6 | 2X6 | 2X5 | 2X5 | 2X4 | 2X4 | 2X3 |
| 95 | NA | 2X6 | 2X6 | 2X5 | 2X5 | 2X4 | 2X4 | 2X3 |
| 105 | NA | 2X6 | 2X6 | 2X5 | 2X5 | 2X4 | 2X4 | 2X3 |
| 115 | NA | 2X6 | 2X6 | 2X5 | 2X5 | 2X4 | 2X4 | 2X3 |
| 125 | NA | 2X6 | 2X6 | 2X5 | 2X5 | 2X4 | 2X4 | 2X3 |
| 135 | NA | 2X6 | 2X6 | 2X5 | 2X5 | 2X4 | 2X4 | 2X3 |
| 145 | NA | 2X6 | 2X6 | 2X5 | 2X5 | 2X4 | 2X4 | 2X3 |
| 155 | NA | 2X6 | 2X6 | 2X5 | 2X5 | 2X4 | 2X4 | 2X3 |
| 165 | NA | 2X6 | 2X6 | 2X5 | 2X5 | 2X4 | 2X4 | 2X3 |
| 175 | NA | 2X6 | 2X6 | 2X5 | 2X5 | 2X4 | 2X4 | 2X3 |
| 185 | NA | 2X6 | 2X6 | 2X5 | 2X5 | 2X4 | 2X4 | 2X3 |
| 195 | NA | 2X6 | 2X6 | 2X5 | 2X5 | 2X4 | 2X4 | 2X3 |
| 255 | NA | 2X6 | 2X6 | 2X5 | 2X5 | 2X4 | 2X4 | 2X3 |

### MAXIMUM HEADER DEFLECTION
2 SPANS SHUTTER

| | SHUTTER SPAN | | | | | | | |
|---|---|---|---|---|---|---|---|---|
| Pd | 66 | 60 | 54 | 48 | 42 | 36 | 30 | 24 |
| 30 | 1.0 | 1.1 | 0.7 | 0.9 | 0.6 | 0.8 | 0.4 | 0.2 |
| 45 | 0.8 | 0.9 | 0.6 | 0.7 | 0.4 | 0.4 | 0.6 | 0.2 |
| 55 | 0.9 | 0.7 | 0.7 | 0.5 | 0.5 | 0.5 | 0.3 | 0.3 |
| 65 | 0.9 | 0.7 | 0.5 | 0.5 | 0.6 | 0.3 | 0.3 | 0.3 |
| 75 | 0.9 | 0.7 | 0.5 | 0.5 | 0.4 | 0.4 | 0.4 | 0.1 |
| 85 | 0.9 | 0.7 | 0.5 | 0.5 | 0.4 | 0.4 | 0.2 | 0.2 |
| 95 | 0.9 | 0.7 | 0.8 | 0.5 | 0.4 | 0.4 | 0.2 | 0.2 |
| 105 | 0.9 | 0.7 | 0.5 | 0.6 | 0.4 | 0.4 | 0.2 | 0.2 |
| 115 | 0.9 | 0.7 | 0.8 | 0.6 | 0.4 | 0.4 | 0.2 | 0.2 |
| 125 | 0.9 | 0.7 | 0.5 | 0.5 | 0.4 | 0.4 | 0.2 | 0.2 |
| 135 | 0.9 | 0.7 | 0.5 | 0.5 | 0.4 | 0.4 | 0.2 | 0.2 |
| 145 | 0.9 | 0.7 | 0.8 | 0.5 | 0.4 | 0.4 | 0.2 | 0.2 |
| 155 | 0.9 | 0.7 | 0.8 | 0.5 | 0.4 | 0.4 | 0.2 | 0.2 |
| 165 | 0.9 | 0.7 | 0.5 | 0.5 | 0.4 | 0.4 | 0.2 | 0.2 |
| 175 | 0.9 | 0.7 | 0.8 | 0.5 | 0.4 | 0.4 | 0.2 | 0.2 |
| 185 | 0.9 | 0.7 | 0.8 | 0.5 | 0.4 | 0.4 | 0.2 | 0.2 |
| 195 | 0.9 | 0.7 | 0.5 | 0.5 | 0.4 | 0.4 | 0.2 | 0.2 |
| 255 | 0.9 | 0.7 | 0.5 | 0.5 | 0.4 | 0.4 | 0.2 | 0.2 |

### MAXIMUM HEADER DEFLECTION
3 SPANS SHUTTER

| | SHUTTER SPAN | | | | | | | |
|---|---|---|---|---|---|---|---|---|
| Pd | 66 | 60 | 54 | 48 | 42 | 36 | 30 | 24 |
| 30 | NA | 1.9 | 1.4 | 1.3 | 1.4 | 1.5 | 0.7 | 0.8 |
| 45 | NA | 1.9 | 1.4 | 1.6 | 1.1 | 1.1 | 1.1 | 0.4 |
| 55 | NA | 1.9 | 1.4 | 1.6 | 1.1 | 1.2 | 0.7 | 0.5 |
| 65 | NA | 1.9 | 1.4 | 1.6 | 1.1 | 1.2 | 0.7 | 0.6 |
| 75 | NA | 1.9 | 1.4 | 1.6 | 1.1 | 1.2 | 0.7 | 0.7 |
| 85 | NA | 1.9 | 1.4 | 1.6 | 1.1 | 1.2 | 0.7 | 0.7 |
| 95 | NA | 1.9 | 1.4 | 1.6 | 1.1 | 1.2 | 0.7 | 0.7 |
| 105 | NA | 1.9 | 1.4 | 1.6 | 1.1 | 1.1 | 0.7 | 0.7 |
| 115 | NA | 1.9 | 1.4 | 1.5 | 1.1 | 1.2 | 0.7 | 0.7 |
| 125 | NA | 1.9 | 1.4 | 1.5 | 1.0 | 1.2 | 0.7 | 0.7 |
| 135 | NA | 1.9 | 1.4 | 1.6 | 1.0 | 1.1 | 0.7 | 0.7 |
| 145 | NA | 1.9 | 1.4 | 1.6 | 1.0 | 1.2 | 0.7 | 0.7 |
| 155 | NA | 1.9 | 1.4 | 1.6 | 1.1 | 1.2 | 0.7 | 0.7 |
| 165 | NA | 1.9 | 1.4 | 1.5 | 1.0 | 1.2 | 0.7 | 0.7 |
| 175 | NA | 1.9 | 1.4 | 1.6 | 1.0 | 1.2 | 0.7 | 0.7 |
| 185 | NA | 1.9 | 1.4 | 1.5 | 1.1 | 1.1 | 0.7 | 0.7 |
| 195 | NA | 1.9 | 1.4 | 1.5 | 1.0 | 1.2 | 0.7 | 0.7 |
| 255 | NA | 1.9 | 1.3 | 1.5 | 1.1 | 1.2 | 0.7 | 0.7 |

DEFLECTION IN INCHES BASED ON HEADER SELECTION
Pd- DESIGNED PRESSURE IN PSF
SHUTTER SPAN IN INCHES

NOTE: HEADER SELECTION AND DEFLECTION ARE CONTROLLED BY THE MAXIMUM ALLOWABLE STORM BARS HEIGHT TABLES ON SHEETS 5 AND 6 OF 14


Manufacturer:
Alutech United, Inc
15 DIXON STREET
SELBYVILLE, DE 19975
Tel.: (302) 854-9100


Product:
RE1000
EXTRUDED ALUMINUM ROLL SHUTTERS


Engineering:
EngCo Inc.
CA 8116
6971 W. Sunrise Blvd. 104
Plantation, Fl. 33313
Tel.: (954) 585-0304


SEP 2 0 2001

Engineer Seal
Pedro De Figueiredo
PE 52609

Date: 8/5/01
Scale: NA
Design by: PPMF

Dade County NOA:
APPROVED AS COMPLYING WITH THE
SOUTH FLORIDA BUILDING CODE
DATE 10/18/2001
BY
PRODUCT CONTROL DIVISION
BUILDING CODE COMPLIANCE OFFICE
ACCEPTANCE NO. 01-0507.01

Drawing Number
01-060R

ANCHOR SCHEDULE

| Type | Description | Embed. | Substract | Manufacturer |
|---|---|---|---|---|
| A | 1/4" Tapcon | 1 3/4" | Concrete | Elco |
| B | 1/4" Tapcon | 1 1/4" | Hollow Block | Elco |
| C | #14 SS Wood Screws | 1 1/2" | Wood (SG=.55) | Elco |

EDGE DISTANCE =3"

ANCHORAGE NOTE: HEADER ANCHORAGE IS CONTROLLED BY THE MAXIMUM ALLOWABLE STORM BARS HEIGHT TABLES ON SHEETS 5 AND 6 OF 14

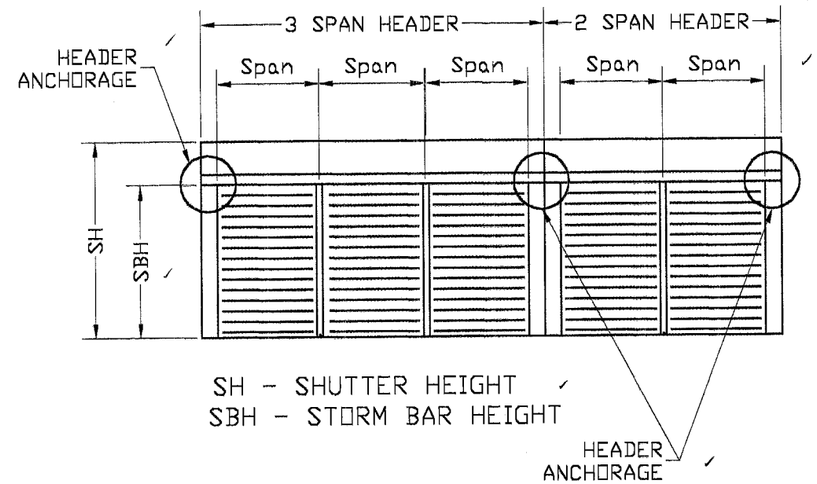


## HEADER ANCHORAGE INTO MULLION TUBE

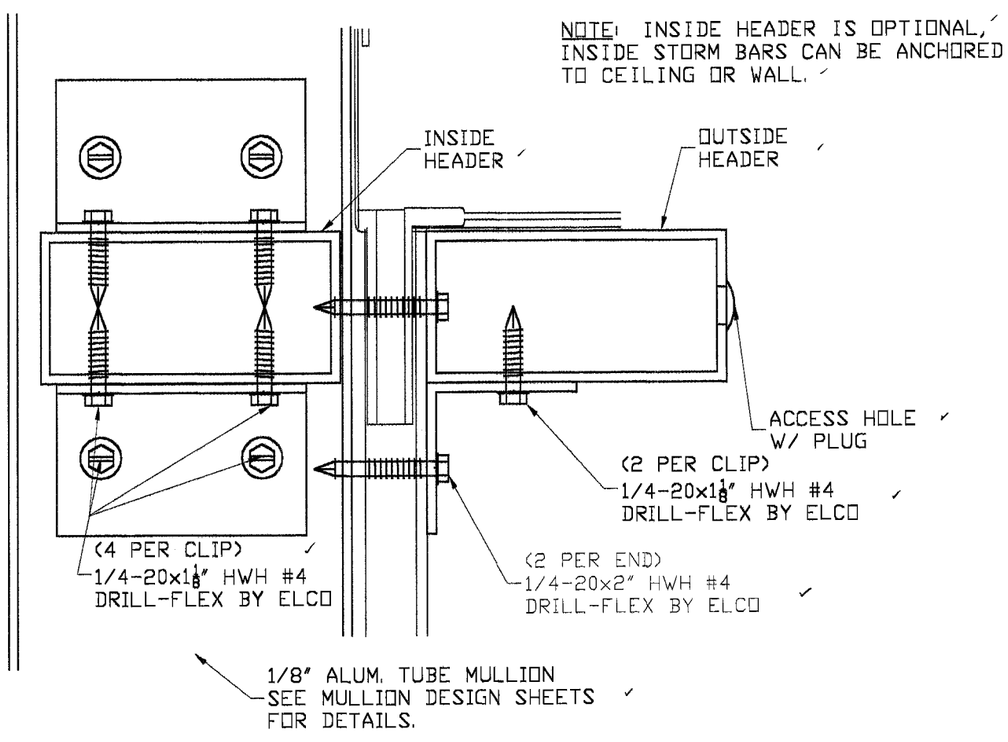


## HEADER ANCHORAGE INTO BUILT-OUT ALUM. TUBE

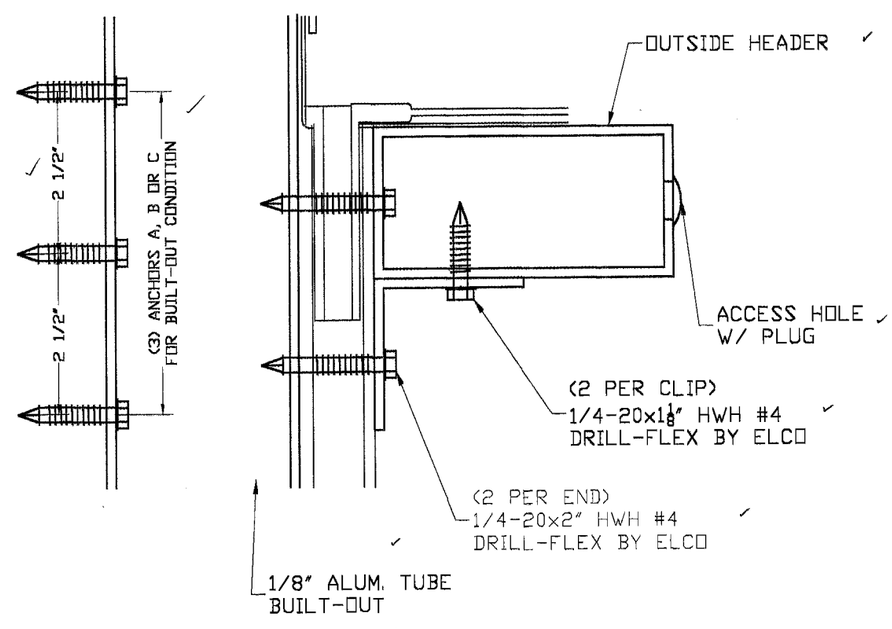



Manufacturer:
Alutech United, Inc
15 DIXON STREET
SELBYVILLE, DE 19975
Tel.: (302) 854-9100


Product:
RE1000
EXTRUDED ALUMINUM ROLL SHUTTERS


Engineering:
EngCo Inc.
CA 8116
6971 W. Sunrise Blvd. 104
Plantation, Fl. 33313
Tel.: (954) 585-0304


SEP 2 0 2001
Engineer Seal
Pedro De Figueiredo
PE 52609

Date: 8/5/01
Scale: NA
Design by: PPMF

Dade County NOA:
APPROVED AS COMPLYING WITH THE SOUTH FLORIDA BUILDING CODE
DATE 10/18/2001
BY
PRODUCT CONTROL DIVISION
BUILDING CODE COMPLIANCE OFFICE
ACCEPTANCE NO. 01-0507.01

Drawing Number
01-060R

# MULLION SELECTION TABLES

## CASE 1 - MULLION ANCHORED WALL TO WALL OR WALL TO FLOOR

### INTERMEDIATE MULLION

| | MULLION SPAN | | | | | | | |
|---|---|---|---|---|---|---|---|---|
| Pd | 120 | 108 | 96 | 84 | 72 | 60 | 48 | 36 |
| 30 | 2X6 | 2X5 | 2X4 | 2X4 | 2X3 | 2X3 | 2X2 | 2X2 |
| 45 | 2X6 | 2X6 | 2X5 | 2X4 | 2X4 | 2X3 | 2X2 | 2X2 |
| 55 | NA | 2X6 | 2X5 | 2X5 | 2X4 | 2X3 | 2X3 | 2X2 |
| 65 | NA | 2X6 | 2X5 | 2X5 | 2X4 | 2X3 | 2X3 | 2X2 |
| 75 | NA | 2X6 | 2X6 | 2X5 | 2X4 | 2X3 | 2X3 | 2X2 |
| 85 | NA | 2X6 | 2X6 | 2X5 | 2X4 | 2X3 | 2X3 | 2X2 |
| 95 | NA | NA | 2X6 | 2X5 | 2X4 | 2X4 | 2X3 | 2X2 |
| 105 | NA | NA | 2X6 | 2X5 | 2X4 | 2X4 | 2X3 | 2X2 |
| 115 | NA | NA | 2X6 | 2X5 | 2X5 | 2X4 | 2X3 | 2X2 |
| 125 | NA | NA | 2X6 | 2X5 | 2X5 | 2X4 | 2X3 | 2X2 |
| 135 | NA | NA | 2X6 | 2X6 | 2X5 | 2X4 | 2X3 | 2X2 |
| 145 | NA | NA | NA | 2X6 | 2X5 | 2X4 | 2X3 | 2X2 |
| 155 | NA | NA | NA | 2X6 | 2X5 | 2X4 | 2X3 | 2X2 |
| 165 | NA | NA | NA | 2X6 | 2X5 | 2X4 | 2X3 | 2X2 |
| 175 | NA | NA | NA | 2X6 | 2X5 | 2X4 | 2X3 | 2X2 |
| 185 | NA | NA | NA | 2X6 | 2X5 | 2X4 | 2X3 | 2X2 |
| 195 | NA | NA | NA | 2X6 | 2X5 | 2X4 | 2X3 | 2X2 |
| 255 | NA | NA | NA | 2X6 | 2X5 | 2X4 | 2X4 | 2X3 |

### END MULLION

| | MULLION SPAN | | | | | | | |
|---|---|---|---|---|---|---|---|---|
| Pd | 120 | 108 | 96 | 84 | 72 | 60 | 48 | 36 |
| 30 | 2X4 | 2X4 | 2X3 | 2X3 | 2X3 | 2X2 | 2X2 | 2X2 |
| 45 | 2X5 | 2X4 | 2X4 | 2X3 | 2X3 | 2X2 | 2X2 | 2X2 |
| 55 | 2X5 | 2X5 | 2X4 | 2X4 | 2X3 | 2X3 | 2X2 | 2X2 |
| 65 | 2X5 | 2X5 | 2X4 | 2X4 | 2X3 | 2X3 | 2X2 | 2X2 |
| 75 | 2X6 | 2X5 | 2X4 | 2X4 | 2X3 | 2X3 | 2X2 | 2X2 |
| 85 | 2X6 | 2X5 | 2X4 | 2X4 | 2X3 | 2X3 | 2X2 | 2X2 |
| 95 | 2X6 | 2X5 | 2X5 | 2X4 | 2X3 | 2X3 | 2X2 | 2X2 |
| 105 | 2X6 | 2X5 | 2X5 | 2X4 | 2X4 | 2X3 | 2X2 | 2X2 |
| 115 | 2X6 | 2X6 | 2X5 | 2X4 | 2X4 | 2X3 | 2X2 | 2X2 |
| 125 | 2X6 | 2X6 | 2X5 | 2X4 | 2X4 | 2X3 | 2X2 | 2X2 |
| 135 | 2X6 | 2X6 | 2X5 | 2X4 | 2X4 | 2X3 | 2X2 | 2X2 |
| 145 | 2X6 | 2X6 | 2X5 | 2X4 | 2X4 | 2X3 | 2X2 | 2X2 |
| 155 | NA | 2X6 | 2X5 | 2X4 | 2X4 | 2X3 | 2X2 | 2X2 |
| 165 | NA | 2X6 | 2X5 | 2X5 | 2X4 | 2X3 | 2X3 | 2X2 |
| 175 | NA | 2X6 | 2X5 | 2X5 | 2X4 | 2X3 | 2X3 | 2X2 |
| 185 | NA | 2X6 | 2X5 | 2X5 | 2X4 | 2X3 | 2X3 | 2X2 |
| 195 | NA | 2X6 | 2X5 | 2X5 | 2X4 | 2X3 | 2X3 | 2X2 |
| 255 | NA | NA | 2X6 | 2X5 | 2X4 | 2X3 | 2X3 | 2X2 |

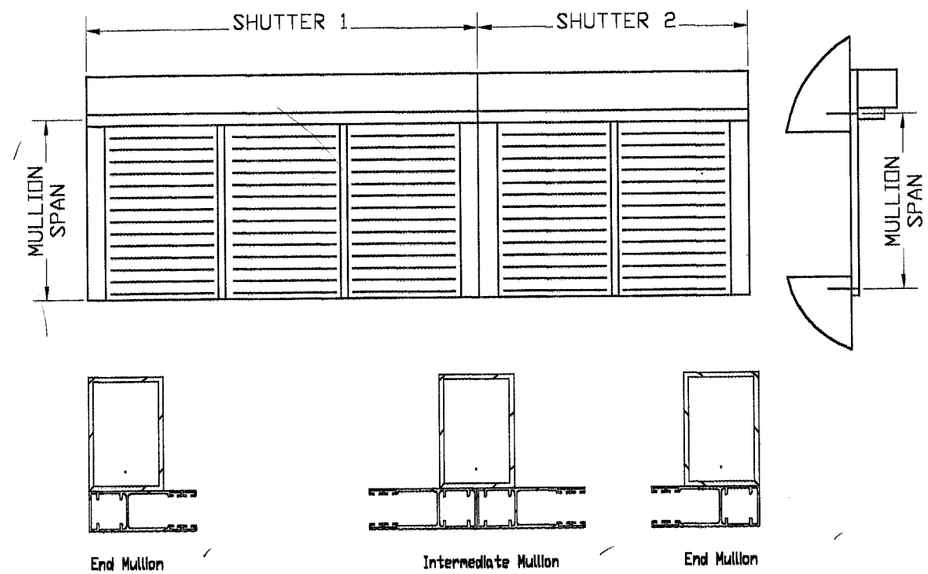


NOTE: MULLION TABLES ARE CONTROLLED BY THE SPAN VS PRESSURE TABLES ON SHEET 3 OF 14

## CASE 2 - MULLION ANCHORED FLOOR TO CEILING

### INTERMEDIATE MULLION

| | MULLION SPAN | | | | | | | |
|---|---|---|---|---|---|---|---|---|
| Pd | 120 | 108 | 96 | 84 | 72 | 60 | 48 | 36 |
| 30 | 2X6 | 2X5 | 2X5 | 2X4 | 2X4 | 2X3 | 2X3 | 2X2 |
| 45 | NA | 2X6 | 2X5 | 2X5 | 2X4 | 2X3 | 2X3 | 2X2 |
| 55 | NA | 2X6 | 2X5 | 2X5 | 2X4 | 2X4 | 2X3 | 2X2 |
| 65 | NA | 2X6 | 2X6 | 2X5 | 2X4 | 2X4 | 2X3 | 2X2 |
| 75 | NA | NA | 2X6 | 2X5 | 2X4 | 2X4 | 2X3 | 2X2 |
| 85 | NA | NA | 2X6 | 2X5 | 2X4 | 2X4 | 2X3 | 2X2 |
| 95 | NA | NA | 2X6 | 2X5 | 2X5 | 2X4 | 2X3 | 2X2 |
| 105 | NA | NA | 2X6 | 2X6 | 2X5 | 2X4 | 2X3 | 2X3 |
| 115 | NA | NA | 2X6 | 2X6 | 2X5 | 2X4 | 2X3 | 2X3 |
| 125 | NA | NA | 2X6 | 2X6 | 2X5 | 2X4 | 2X3 | 2X3 |
| 135 | NA | NA | NA | 2X6 | 2X5 | 2X4 | 2X3 | 2X3 |
| 145 | NA | NA | NA | 2X6 | 2X5 | 2X4 | 2X3 | 2X3 |
| 155 | NA | NA | NA | 2X6 | 2X5 | 2X4 | 2X3 | 2X3 |
| 165 | NA | NA | NA | 2X6 | 2X5 | 2X4 | 2X3 | 2X3 |
| 175 | NA | NA | NA | 2X6 | 2X5 | 2X4 | 2X4 | 2X3 |
| 185 | NA | NA | NA | 2X6 | 2X5 | 2X4 | 2X4 | 2X3 |
| 195 | NA | NA | NA | 2X6 | 2X5 | 2X4 | 2X4 | 2X3 |
| 255 | NA | NA | NA | NA | 2X6 | 2X5 | 2X4 | 2X3 |

### END MULLION

| | MULLION SPAN | | | | | | | |
|---|---|---|---|---|---|---|---|---|
| Pd | 120 | 108 | 96 | 84 | 72 | 60 | 48 | 36 |
| 30 | 2X5 | 2X4 | 2X4 | 2X4 | 2X3 | 2X3 | 2X2 | 2X2 |
| 45 | 2X5 | 2X5 | 2X4 | 2X4 | 2X3 | 2X3 | 2X3 | 2X2 |
| 55 | 2X6 | 2X5 | 2X4 | 2X4 | 2X3 | 2X3 | 2X3 | 2X2 |
| 65 | 2X6 | 2X5 | 2X5 | 2X4 | 2X4 | 2X3 | 2X3 | 2X2 |
| 75 | 2X6 | 2X5 | 2X5 | 2X4 | 2X4 | 2X3 | 2X3 | 2X2 |
| 85 | 2X6 | 2X5 | 2X5 | 2X4 | 2X4 | 2X3 | 2X3 | 2X2 |
| 95 | 2X6 | 2X5 | 2X5 | 2X4 | 2X4 | 2X3 | 2X3 | 2X2 |
| 105 | 2X6 | 2X6 | 2X5 | 2X4 | 2X4 | 2X3 | 2X3 | 2X2 |
| 115 | 2X6 | 2X6 | 2X5 | 2X5 | 2X4 | 2X3 | 2X3 | 2X2 |
| 125 | 2X6 | 2X6 | 2X5 | 2X5 | 2X4 | 2X3 | 2X3 | 2X2 |
| 135 | NA | 2X6 | 2X5 | 2X5 | 2X4 | 2X3 | 2X3 | 2X2 |
| 145 | NA | 2X6 | 2X5 | 2X5 | 2X4 | 2X3 | 2X3 | 2X2 |
| 155 | NA | 2X6 | 2X5 | 2X5 | 2X4 | 2X3 | 2X3 | 2X2 |
| 165 | NA | 2X6 | 2X5 | 2X5 | 2X4 | 2X4 | 2X3 | 2X2 |
| 175 | NA | 2X6 | 2X6 | 2X5 | 2X4 | 2X4 | 2X3 | 2X2 |
| 185 | NA | 2X6 | 2X6 | 2X5 | 2X4 | 2X4 | 2X3 | 2X2 |
| 195 | NA | 2X6 | 2X6 | 2X5 | 2X4 | 2X4 | 2X3 | 2X2 |
| 255 | NA | NA | 2X6 | 2X5 | 2X5 | 2X4 | 2X3 | 2X2 |

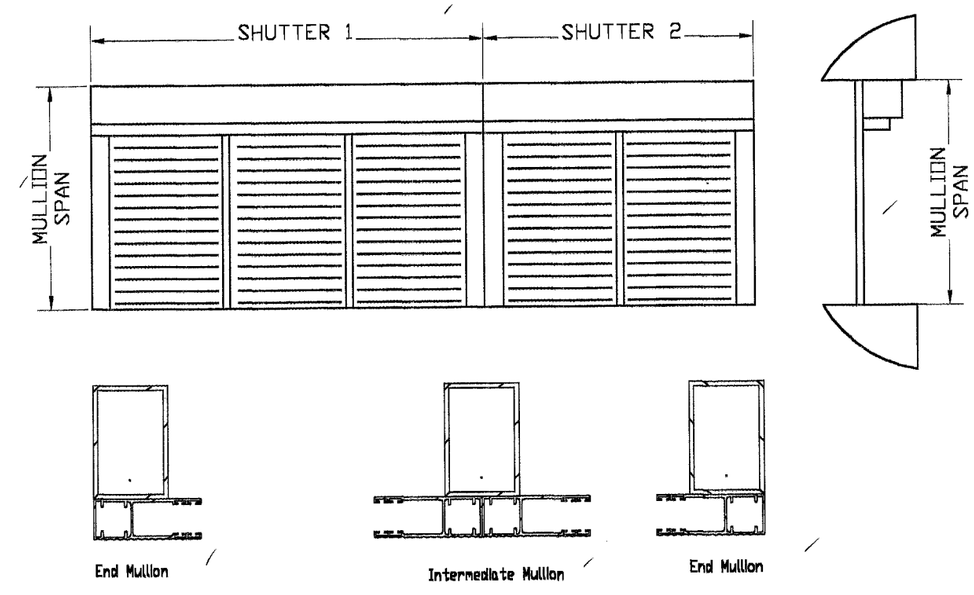



Manufacturer:
Alutech United, Inc
15 DIXON STREET
SELBYVILLE, DE 19975
Tel.: (302) 854-9100


Product:
RE1000
EXTRUDED ALUMINUM ROLL SHUTTERS


Engineering:
EngCo Inc.
CA 8116
6971 W. Sunrise Blvd. 104
Plantation, Fl. 33313
Tel.: (954) 585-0304


SEP 2 0 2001

Engineer Seal
Pedro De Figueiredo
PE 52609

Date: 8/5/01
Scale: NA
Design by: PPMF

Dade County NOA:
APPROVED AS COMPLYING WITH THE SOUTH FLORIDA BUILDING CODE
DATE 10/18/2001
BY
PRODUCT CONTROL DIVISION
BUILDING CODE COMPLIANCE OFFICE
ACCEPTANCE NO 01-0507.01

Drawing Number
01-060R

# MULLION ANCHORAGE TABLES
# ALLOWABLE DESIGN LOAD – Pd (Psf)

## TABLE 1
## Mullion Anchored to Clip

Allowable Loads PSF

| | # OF ANCHORS D | |
|---|---|---|
| AREA | 2 | 3 |
| 10 | 145 | 195 |
| 15 | 95 | 145 |
| 20 | 75 | 105 |
| 25 | 55 | 85 |
| 30 | 45 | 75 |
| 35 | 30 | 55 |
| 40 | 30 | 55 |
| 45 | 30 | 45 |

NOTES:
1- END MULLION: USE ONE CLIP WITH 2 OR 3 ANCHORS TYPE D.
2- INTERMEDIATE MULLION: USE TWO CLIPS WITH 4 OR 6 ANCHORS TYPE D.
3- AREA: SEE FIGURE 1 TO CALCULATE AREA

## FIGURE 1
## Area Calculation

AREA = Ms X SPAN (SQF)
Ms= MULLION SPAN (Ft)
SPAN= SHUTTER SPAN (Ft)
AREA END MULLION 1 = Ms X SPAN 1
AREA END MULLION 2 = Ms X SPAN 2
AREA INTERM. MULL 3 = Ms X SPAN (SPAN=GREATER OF SPAN 1 AND 2)

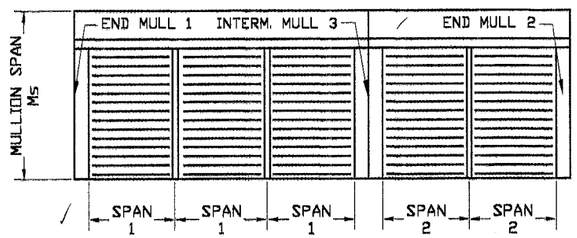


## TABLE 3
## Mullion Anchored to Floor/Ceiling

Allowable Loads PSF

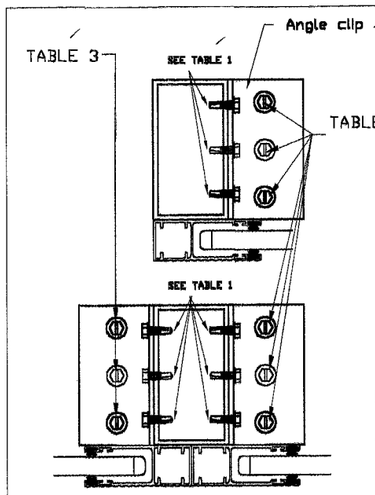


| | ANCHOR TYPE A | | | | |
|---|---|---|---|---|---|
| AREA | 2 | 3 | 4 | 5 | 6 |
| 10 | 30 | 65 | 85 | 115 | 155 |
| 15 | NA | 45 | 55 | 75 | 105 |
| 20 | NA | 30 | 45 | 55 | 75 |
| 25 | NA | NA | 30 | 45 | 55 |
| 30 | NA | NA | 30 | 30 | 45 |
| 35 | NA | NA | NA | 30 | 45 |
| 40 | NA | NA | NA | NA | 30 |
| 45 | NA | NA | NA | NA | 30 |

NOTES:
1- USE 2 ANCHORS FOR 2'/3'/4' CLIPS
2- USE 3 ANCHORS FOR 5'/6' CLIPS
3- END MULLION: USE ONE CLIP
4- INTERMEDIATE MULLIONS: USE TWO CLIPS
5- AREA: SEE FIGURE 1 TO CALCULATE AREA

## TABLE 5 – WALL MOUNT
## Mullion Anchored to Wall

Allowable Loads PSF

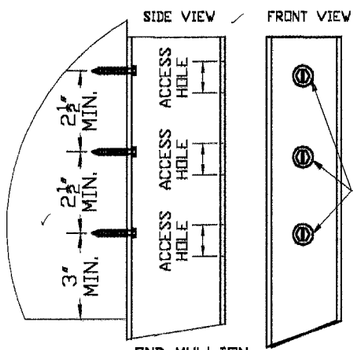


END MULLION
WALL MOUNT (W/OUT CLIP)

| | 3 ANCHORS | | |
|---|---|---|---|
| AREA | A | B | C |
| 10 | 255 | 115 | 255 |
| 15 | 165 | 75 | 175 |
| 20 | 125 | 55 | 125 |
| 25 | 95 | 45 | 105 |
| 30 | 85 | 30 | 85 |
| 35 | 75 | 30 | 75 |
| 40 | 55 | NA | 65 |
| 45 | 55 | NA | 55 |

NOTE:
1- END MULLIONS - 3 ANCHORS TYPE A, B OR C (WITHOUT OR WITH 1 CLIP)
2- INTERMEDIATE MULLIONS - 6 ANCHORS TYPE A, B, OR C (WITH 2 CLIPS)
3- AREA: SEE FIGURE 1 TO CALCULATE AREA

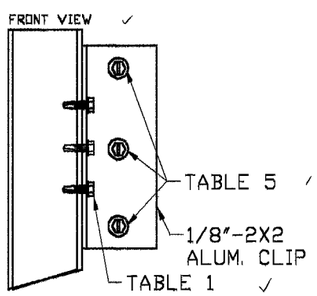


END MULLION
WALL MOUNT (W/ CLIP)

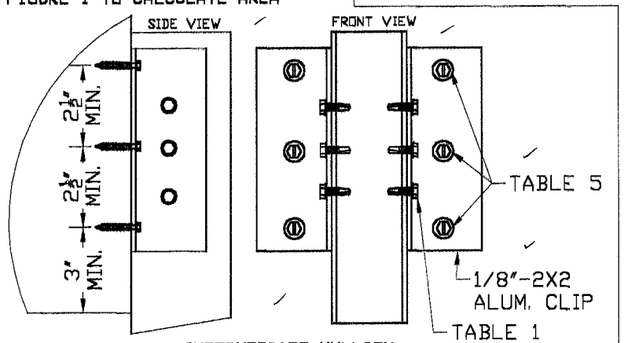


INTERMEDIATE MULLION
WALL MOUNT

## TABLE 2
## ANGLE OR TUBE – BUILT-OUT MOUNT

Allowable Loads PSF

| | ANCHORS | |
|---|---|---|
| AREA | A/C | B |
| 10 | 125 | 75 |
| 15 | 85 | 45 |
| 20 | 55 | 30 |
| 25 | 45 | 30 |
| 30 | 30 | NA |
| 35 | 30 | NA |
| 40 | 30 | NA |

NOTES:
1- CONCRETE/WOOD WALLS (ANCHOR TYPE A OR C)
END MULL: USE 3 ANCHORS
INTERM. MULLIONS: USE 6 ANCHORS
2- HOLLOW BLOCK WALLS (ANCHOR TYPE B)
END MULL: USE 4 ANCHORS
INTERM. MULLIONS: USE 8 ANCHORS
3- AREA: SEE FIGURE 1 TO CALCULATE AREA

## TABLE 4
## Mullion Anchored to Built Out

Allowable Loads PSF

| | #10-16x3/4" Drill-Flex Anchor | | | | |
|---|---|---|---|---|---|
| AREA | 2 | 3 | 4 | 5 | 6 |
| 10 | 30 | 45 | 65 | 85 | 95 |
| 15 | NA | 30 | 45 | 55 | 65 |
| 20 | NA | NA | 30 | 30 | 45 |
| 25 | NA | NA | NA | 30 | 30 |
| 30 | NA | NA | NA | NA | 30 |

NOTES:
1- USE 2 ANCHORS FOR 2' or 3' CLIPS
2- USE 3 ANCHORS FOR 4', 5' or 6' CLIPS
3- END MULLION: USE ONE CLIP
4- INTERMEDIATE MULLIONS: USE TWO CLIPS
5- AREA: SEE FIGURE 1 TO CALCULATE AREA

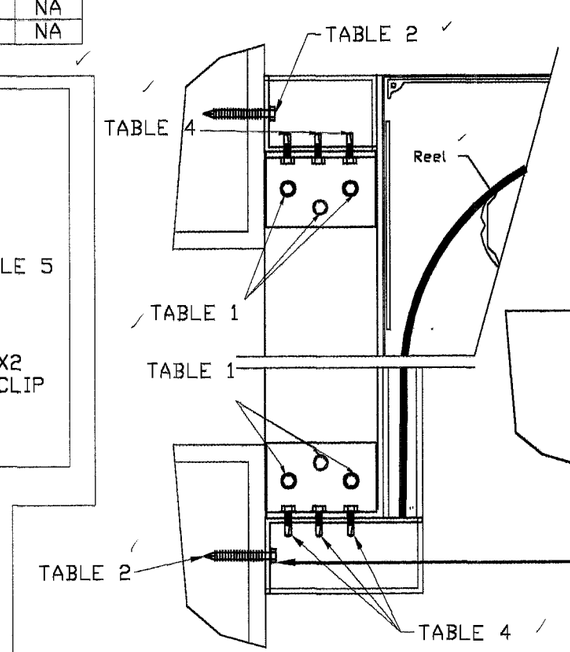


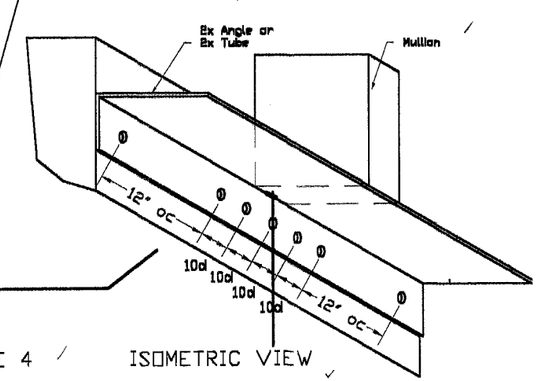


ISOMETRIC VIEW

## ANCHOR SCHEDULE

| Type | Description | Embed. | Substract | Manufacturer |
|---|---|---|---|---|
| A | 1/4" Tapcon | 1 3/4" | Concrete | Elco |
| B | 1/4" Tapcon | 1 1/4" | Hollow Block | Elco |
| C | #14 SS Wood Screws | 1 1/2" | Wood (SG=.55) | Elco |
| D | #10-16x3/4" Drill-Flex | 1/8 | Aluminum | Elco |

EDGE DISTANCE =3"


Manufacturer:
Alutech United, Inc
15 DIXON STREET
SELBYVILLE, DE 19975
Tel.: (302) 854-9100


Product:
RE1000
EXTRUDED ALUMINUM ROLL SHUTTERS


Engineering:
EngCo Inc.
CA 8116
6971 W. Sunrise Blvd. 104
Plantation, Fl. 33313
Tel.: (954) 585-0304


SEP 2 0 2001

Engineer Seal
Pedro De Figueiredo
PE 52609

Date: 8/5/01
Scale: NA
Design by: PPMF

Dade County NOA:
APPROVED AS COMPLYING WITH THE SOUTH FLORIDA BUILDING CODE
DATE 10/18/2001
BY
PRODUCT CONTROL DIVISION
BUILDING CODE COMPLIANCE OFFICE
ACCEPTANCE NO. 01-0507.01

Drawing Number
01-060R

# HOOD ASSEMBLY

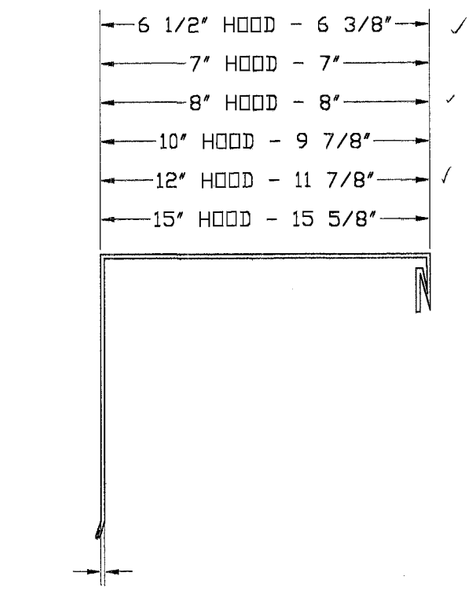


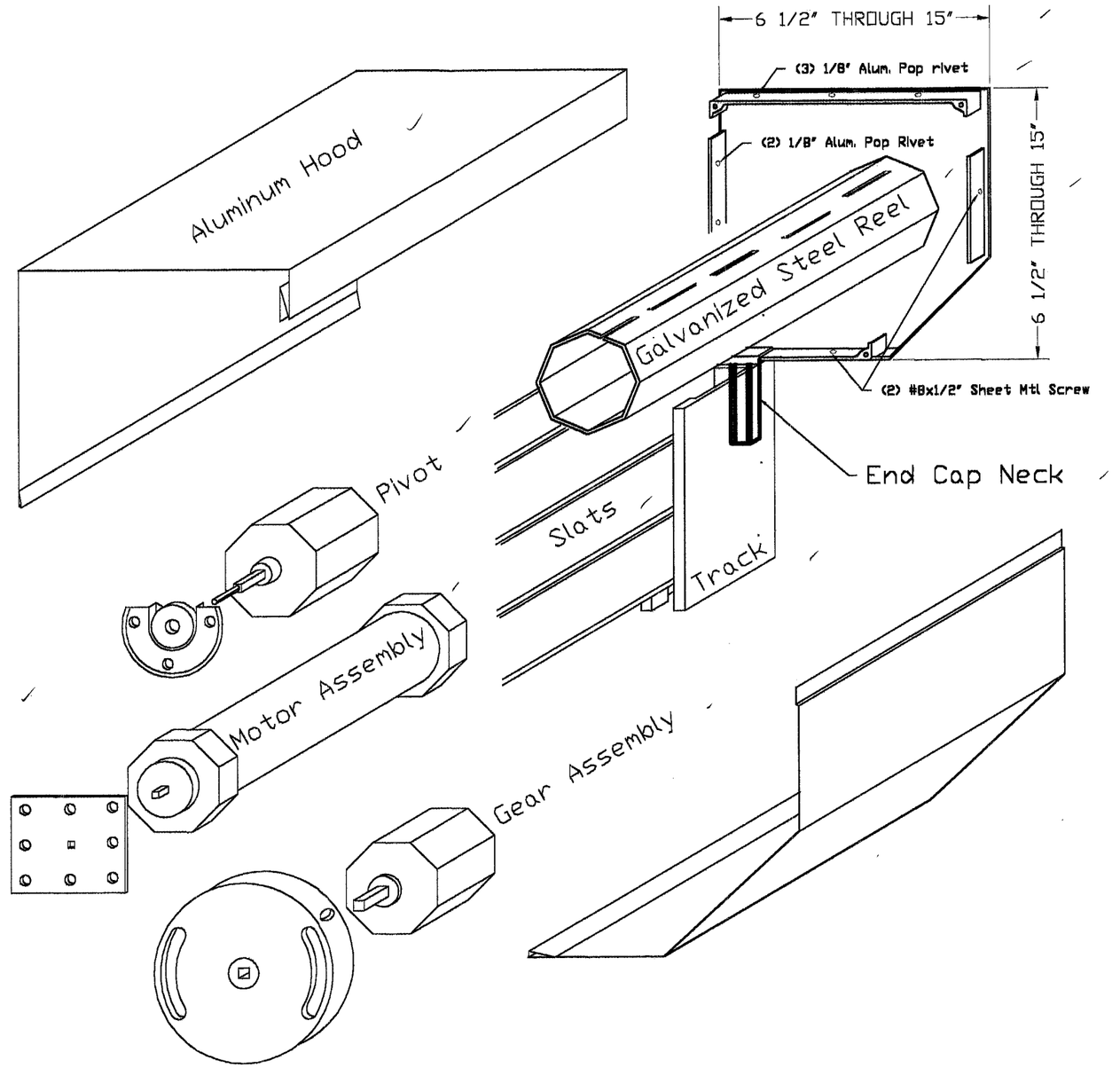


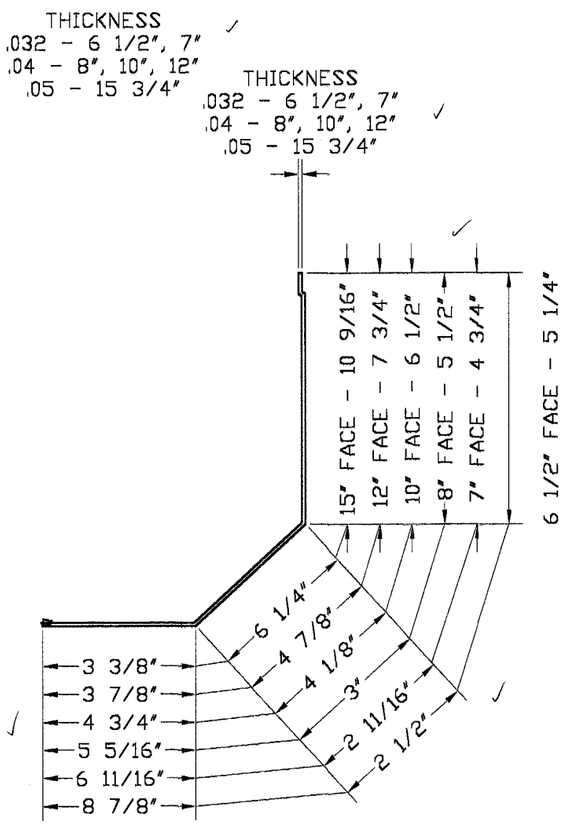


Manufacturer:
**Alutech United, Inc**
15 DIXON STREET
SELBYVILLE, DE 19975
Tel.: (302) 854-9100

Product:
**RE1000**
EXTRUDED ALUMINUM ROLL SHUTTERS

Engineering:
**EngCo Inc.**
CA 8116
6971 W. Sunrise Blvd. 104
Plantation, Fl. 33313
Tel.: (954) 585-0304

SEP 2 0 2001

Engineer Seal
Pedro De Figueiredo
PE 52609

Date: 8/5/01
Scale: NA
Design by: PPMF

Dade County NOA:
APPROVED AS COMPLIANT
SOUTH FLORIDA BUILDING CODE
DATE 10/18/2001
BY
PRODUCT CONTROL DIVISION
BUILDING CODE COMPLIANCE OFFICE
ACCEPTANCE NO. 01-0507.01

Drawing Number
01-060R

Sheet
13 of 14

# MULTIPLE SPAN SHUTTER SLAT TOTAL DEFLECTION

## POSITIVE LOAD

| UNIT # | (1) Pd | (2) TT | (3) # SPANS | (4) Span | (5) SLAT DEF(A). | (6) STORM BARS TYPE | (6) STORM BARS SPAN | (6) STORM BARS DEF. (B) | (7) HEADER TYPE | (7) HEADER DEF. (C) | (8) TOTAL DEF. (D) D=A+B/2+C/4 | (9) Allowable D<=Span/30 or 2" | (10) GS GS=D+1 |
|---|---|---|---|---|---|---|---|---|---|---|---|---|---|
| 1 | | | | | | | | | | | | | |
| 2 | | | | | | | | | | | | | |
| 3 | | | | | | | | | | | | | |
| 4 | | | | | | | | | | | | | |
| 5 | | | | | | | | | | | | | |
| 6 | | | | | | | | | | | | | |

## NEGATIVE LOAD

| UNIT # | (1) Pd | (2) TT | (3) # SPANS | (4) Span | (5) SLAT DEF(A). | (6) STORM BARS TYPE | (6) STORM BARS SPAN | (6) STORM BARS DEF. (B) | (7) HEADER TYPE | (7) HEADER DEF. (C) | (8) TOTAL DEF. (D) D=A+B/2+C/4 | (9) Allowable D<=Span/30 |
|---|---|---|---|---|---|---|---|---|---|---|---|---|
| 1 | | | | | | | | | | | | |
| 2 | | | | | | | | | | | | |
| 3 | | | | | | | | | | | | |
| 4 | | | | | | | | | | | | |
| 5 | | | | | | | | | | | | |
| 6 | | | | | | | | | | | | |

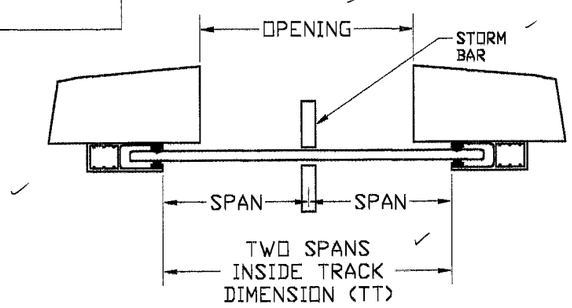


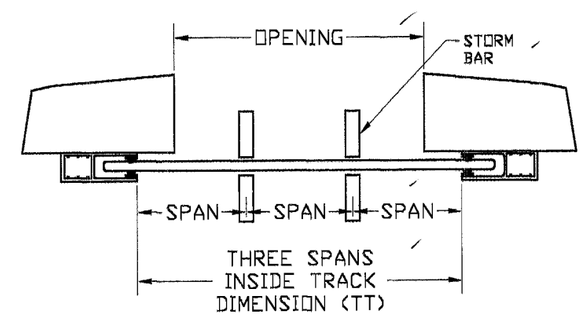


PROCEDURE:
STEP 1: PROVIDE PROJECT DESIGNED PRESSURE IN PSF AS PER ITEM 4 SHEET 1 OF 14, BASED ON ASCE 7-88
STEP 2: PROVIDE TRACK TO TRACK SHUTTER DIMENSION IN INCHES.
STEP 3: PROVIDE NUMBER OF SPANS: 2 FOR ONE SET OF STORM BARS 3 FOR TWO SETS.
STEP 4: CALCULATE THE SPAN SIZE DIVIDING TT/# OF SPANS. THIS VALUE MUST BE LESS OR EQUAL THE CORRESPONDING VALUE OF TABLE 1, 3 ON SHEET 3 OF 14.
STEP 5: CALCULATED SLAT DEFLECTION IN INCHES AS PER TABLE 2, 3 OR 3, 3.
STEP 6: SELECT APPROPRIATE STORM BAR TYPE AND CORRESPONDING DEFLECTION ON SHEETS 5 OR 6 OF 14.
STEP 7: (IF APPLICABLE) SELECT APPROPRIATE HEADER TYPE AND CORRESPONDING DEFLECTION ON SHEETS 8 OR 9 OF 14.
STEP 8: CALCULATE TOTAL DEFLECTION
STEP 9: CALCULATE AND COMPARE MAXIMUM ALLOWABLE DEFLECTION. IF TOTAL DEFLECTION EXCEEDS THE ALLOWABLE TRY TO UPGRADE THE STORM BAR UNTIL DESIGN IS ACCEPTABLE.
STEP 10: CALCULATE THE SLAT TO GLASS SEPARATION (POSITIVE ONLY). COMPARE WITH GLASS SEPARATION TABLE.
NOTE: USE ADDITIONAL SHEETS IF PROJECT HAVE MORE THAN 6 SHUTTERS.

| (GS) GLASS SEPARATION: | |
|---|---|
| LARGE MISSILE IMPACT | WIND LOAD ONLY |
| 4 7/8" -48"<=SPAN<=66 5/8"<br>4" -30"<SPAN<48"<br>3 1/2" -SPAN<=30" | 3"<br>ALL CONDITIONS |

GLASS SEPARATION FOR LARGE MISSILE IMPACT IS APPLICABLE FOR INSTALLATION UP TO 30 FT. OF GRADE DUE TO LARGE MISSILE IMPACT. WIND LOAD GLASS SEPARATION APPLIES TO INSTALLATION ABOVE 30 FT. OF GRADE.


Manufacturer:
Alutech United, Inc
15 DIXON STREET
SELBYVILLE, DE 19975
Tel.: (302) 854-9100


Product:
RE1000
EXTRUDED ALUMINUM ROLL SHUTTERS


Engineering:
EngCo Inc.
CA 8116
6971 W. Sunrise Blvd. 104
Plantation, Fl. 33313
Tel.: (954) 585-0304


SEP 2 0 2001
Engineer Seal
Pedro De Figueiredo
PE 52609

Date: 8/5/01
Scale: 1:1
Design by: PPMF

Dade County NOA:
APPROVED AS COMPLYING WITH THE SOUTH FLORIDA BUILDING CODE
DATE 10/18/2001
BY
PRODUCT CONTROL DIVISION
BUILDING CODE COMPLIANCE OFFICE
ACCEPTANCE NO. 01-0507.01

Drawing Number
01-060R