MIAMI-DADE

BUILDING CODE COMPLIANCE OFFICE (BCCO)
PRODUCT CONTROL DIVISION

MIAMI-DADE COUNTY, FLORIDA
METRO-DADE FLAGLER BUILDING
140 WEST FLAGLER STREET, SUITE 1603
MIAMI, FLORIDA 33130-1563
(305) 375-2901 FAX (305) 375-2908

NOTICE OF ACCEPTANCE (NOA)

Eastern Metal Supply, Inc.
4268 West Roads Drive
Riviera Beach, Florida 33407

SCOPE:
This NOA is being issued under the applicable rules and regulations governing the use of construction materials. The documentation submitted has been reviewed by Miami-Dade County Product Control Division and accepted by the Board of Rules and Appeals (BORA) to be used in Miami Dade County and other areas where allowed by the Authority Having Jurisdiction (AHJ).

This NOA shall not be valid after the expiration date stated below. The Miami-Dade County Product Control Division (In Miami Dade County) and/or the AHJ (in areas other than Miami Dade County) reserve the right to have this product or material tested for quality assurance purposes. If this product or material fails to perform in the accepted manner, the manufacturer will incur the expense of such testing and the AHJ may immediately revoke, modify, or suspend the use of such product or material within their jurisdiction. BORA reserves the right to revoke this acceptance, if it is determined by Miami-Dade County Product Control Division that this product or material fails to meet the requirements of the applicable building code.

This product is approved as described herein, and has been designed to comply with the High Velocity Hurricane Zone of the Florida Building Code.

DESCRIPTION: 0.050" Solid Bertha Aluminum Storm Panels Shutter

APPROVAL DOCUMENT: Drawing No. 01-058, titled " 0.050" Solid Bertha Aluminum Storm Panel", sheets 1 through 15 of 15, prepared by Tilteco, Inc., dated August 27, 2001, bearing the Miami-Dade County Product Control Approval stamp with the Notice of Acceptance number and approval date by the Miami-Dade County Product Control Division.

MISSILE IMPACT RATING: Large and Small Missile Impact

LABELING: Each panel shall bear a permanent label with the manufacturer's name or logo, city, state and the following statement: "Miami-Dade County Product Control Approved", unless otherwise noted herein.

RENEWAL of this NOA shall be considered after a renewal application has been filed and there has been no change in the applicable building code negatively affecting the performance of this product.

TERMINATION of this NOA will occur after the expiration date or if there has been a revision or change in the materials, use, and/or manufacture of the product or process. Misuse of this NOA as an endorsement of any product, for sales, advertising or any other purposes shall automatically terminate this NOA. Failure to comply with any section of this NOA shall be cause for termination and removal of NOA.

ADVERTISEMENT: The NOA number preceded by the words Miami-Dade County, Florida, and followed by the expiration date may be displayed in advertising literature. If any portion of the NOA is displayed, then it shall be done in its entirety.

INSPECTION: A copy of this entire NOA shall be provided to the user by the manufacturer or its distributors and shall be available for inspection at the job site at the request of the Building Official.

This NOA **revises NOA # 00-0602.04** and consists of this page 1 as well as approval document mentioned above. The submitted documentation was reviewed by **Helmy A. Makar, P.E.**

PRODUCT CONTROL ACCEPTED

NOA No 01-0516.06
Expiration Date: 08/07/2003
Approval Date: 03/21/2002

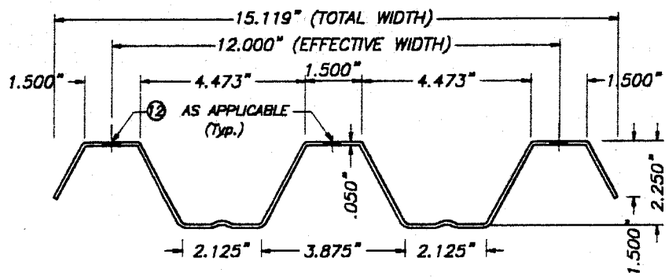

FULL PANEL

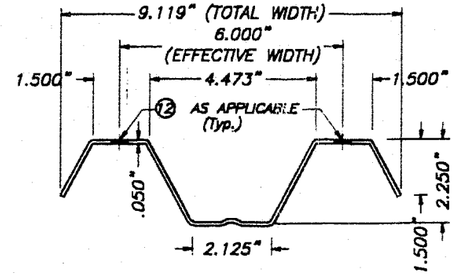

HALF PANEL

1 SOLID STORM PANEL

SCALE : 1/2" = 1"

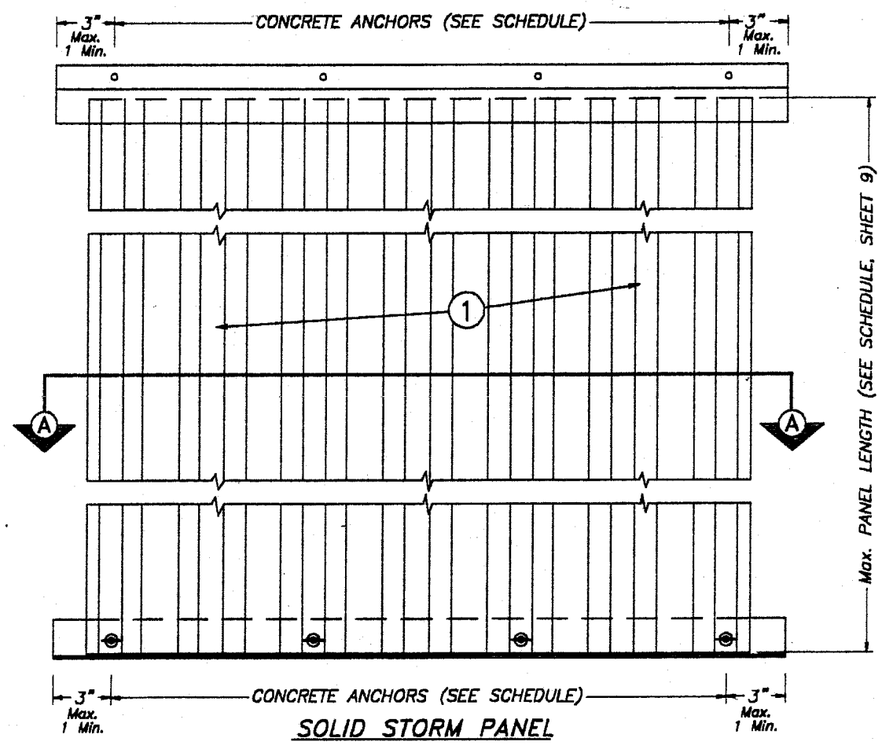

SOLID STORM PANEL
TYPICAL ELEVATION

N. T. S.

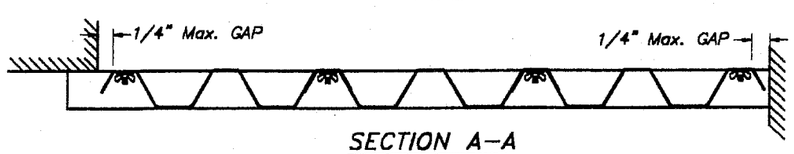

SECTION A-A

N. T. S.

COMPONENTS

GENERAL NOTES:

1. STORM PANEL'S ADEQUACY FOR IMPACT AND FATIGUE RESISTANCE HAS BEEN VERIFIED IN ACCORDANCE LAB REPORT # 1022.01-96 AND # 0221.01-01.
2. ALL ALUMINUM SHEET METAL PANELS SHALL HAVE 5052-H32 ALLOY OR 3004-H34 ALLOY.
3. ALL ALUMINUM EXTRUSIONS SHALL BE 6063-T6 ALLOY UNLESS OTHERWISE NOTED.
4. ALL SCREWS TO BE STAINLESS STEEL 304 OR 316 SERIES.
5. BOLTS TO BE 2024-T4 ALUMINUM ALLOY, GALVANIZED OR STAINLESS STEEL, WITH 36 ksi MINIMUM YIELD POINT.
6. ANCHORS TO WALL SHALL BE AS FOLLOWS: (UNLESS OTHERWISE NOTED)
   (A) TO EXISTING POURED CONCRETE:
   - 1/4" ø TAPCON ANCHORS AS MANUFACTURED BY I.T.W. BUILDEX (REGULAR OR 410 S.S.) AND ELCO TEXTRON (REGULAR).
   - 1/4" ø CRETE-FLEX SS4 ANCHORS AS MANUFACTURED BY ELCO TEXTRON.
   - 1/4" ø CF TAP-GRIP ANCHORS (BERTHA STUD-CON), AS MANUFACTURED BY TRU-FAST CORPORATION.
   - 1/4" ø ZAMAC NAILIN ANCHORS AS MANUFACTURED BY THE POWER FASTENINGS, INC.
   - 1/4" ø x 7/8" CALK-IN ANCHORS, 1/4" ø ELCO male & female "PANELMATE" OR 1/4" ø ELCO male "PANELMATE PLUS" AS MANUFACTURED BY THE POWER FASTENINGS, INC. AND ELCO TEXTRON, RESPECTIVELY.

   NOTES:
   A.1) MINIMUM EMBEDMENT INTO POURED CONCRETE OF TAPCON ANCHORS OR CRETEFLEX SS4 IS 1 3/4"; FOR ZAMAC NAILIN IS 1 3/8"; FOR CF TAP-GRIP ANCHORS IS 1 1/4"; FOR ELCO PANELMATE AND ELCO male "PANELMATE PLUS" IS 2".
   A.2) 7/8" CALK-IN ANCHORS SHALL BE ENTIRELY EMBEDDED INTO THE POURED CONCRETE. NO EMBEDMENT INTO STUCCO SHALL BE PERMITTED. 1/4" ø-20 SCREWS USED SHALL BE 1 1/2" LONG MINIMUM SHOULD STUCCO EXIST, AND 1" MINIMUM FOR WALLS WITH NO STUCCO.
   A.3) IN CASE THAT PRECAST STONE, PRECAST CONCRETE PANELS, OR PAVERS BE FOUND ON THE EXISTING WALL OR FLOOR, ANCHORS SHALL BE LONG ENOUGH TO REACH THE MAIN STRUCTURE BEHIND SUCH PANELS, ANCHORAGE SHALL BE AS INDICATED ON NOTES A.1) & A.2). ABOVE.

   (B) TO EXISTING CONCRETE BLOCK WALL:
   - 1/4" ø TAPCON ANCHORS AS MANUFACTURED BY I.T.W. BUILDEX (REGULAR OR 410 S.S.) AND ELCO TEXTRON (REGULAR).
   - 1/4" ø CRETE-FLEX SS4 ANCHORS AS MANUFACTURED BY ELCO TEXTRON.
   - 1/4" ø CF TAP-GRIP ANCHORS (BERTHA STUD-CON), AS MANUFACTURED BY TRU-FAST CORPORATION.
   - 1/4" ø ZAMAC NAILIN ANCHORS AS MANUFACTURED BY THE POWER FASTENINGS, INC.
   - 1/4" ø x 7/8" CALK-IN ANCHORS, 1/4" ø ELCO male & female "PANELMATE" OR 1/4" ø ELCO male "PANELMATE PLUS" AS MANUFACTURED BY THE POWER FASTENINGS, INC. AND ELCO TEXTRON, RESPECTIVELY.

   NOTES:
   B.1) MINIMUM EMBEDMENT OF TAPCON ANCHORS, ZAMAC NAILIN, CF TAPGRIP, ELCO PANELMATE, ELCO male "PANELMATE PLUS" AND CRETE-FLEX SS4, INTO THE CONCRETE BLOCK UNIT SHALL BE 1 1/4".
   B.2) 7/8" CALK-IN ANCHORS SHALL BE ENTERILY EMBEDDED INTO THE CONCRETE BLOCK UNIT. UNIT, NO EMBEDMENT INTO STUCCO SHALL BE PERMITTED. 1/4" ø-20 SCREWS USED SHALL BE 1 1/2" LONG MINIMUM SHOULD STUCCO EXIST, AND 1" MINIMUM FOR WALLS WITH NO STUCCO.
   B.3) IN CASE THAT PRECAST STONE OR PRECAST CONCRETE PANELS BE FOUND ON THE EXISTING WALL, ANCHORS SHALL BE LONG ENOUGH TO REACH THE MAIN STRUCTURE BEHIND SUCH PANELS. ANCHORAGE SHALL BE AS INDICATED ON NOTES IN B.1) & B.2) ABOVE.

   (C) ANCHORS SHALL BE INSTALLED FOLLOWING ALL OF THE RECOMMENDATIONS AND SPECIFICATIONS OF THE ANCHOR'S MANUFACTURER.
7. PANELS MAY ALSO BE INSTALLED HORIZONTALLY FOLLOWING INSTALLATION DETAILS SHOWN ON SECTIONS 1 THRU 16 (SHEET 3 THRU 7 OF 15) EXCEPT THAT HEADERS 2, 3 & 4 SHALL NOT BE USED.
8. IT SHALL BE THE RESPONSIBILITY OF THE CONTRACTOR TO VERIFY THE SOUNDNESS OF THE STRUCTURE WHERE SHUTTER IS TO BE ATTACHED TO INSURE PROPER ANCHORAGE. THIS SHUTTER SHALL ONLY BE ATTACHED TO CONCRETE, BLOCK OR WOOD FRAME BUILDINGS.
9. SHUTTER MANUFACTURER'S LABEL SHALL BE PLACED AT BOTTOM OF EACH PANEL. LABEL SHALL READ AS FOLLOWS:
   EASTERN METAL SUPPLY, INC.
   RIVIERA BEACH, FL.
   MIAMI-DADE COUNTY PRODUCT CONTROL APPROVED.

Approved as complying with the
Florida Building Code
Date 03/21/2002
NOA# 01-0516.06
Miami Dade Product Control
Division
By

MIAMI-DADE COUNTY

2/21/02

TILTECO INC.
TILLIT TESTING & ENGINEERING COMPANY
8585 N.W. 38th. St., Ste. 217, VIRGINIA GARDENS, FL 33166
Phone : (305)871-1530 . Fax : (305)871-1531
EB-0006719
WALTER A. TILLIT Jr. P. E.
FLORIDA Lic. # 44167

0.050" SOLID BERTHA ALUMINUM STORM PANEL

EASTERN METAL SUPPLY, INC
4268 WEST ROADS DRIVE
RIVIERA BEACH, FL 33407

REV. No	DESCRIPTION	DATE	REV. No	DESCRIPTION	DATE
1	OLD 98-172	8/27/01	3	-	-
2	GENERAL	1/18/02	4	-	-

AS SHOWN
SCALE

8/27/01
DATE

01-058
DRAWING No

SHEET 1 OF 15

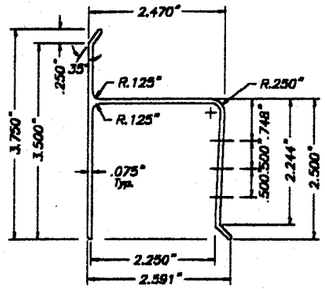

② "h" HEADER
SCALE : 3/8" = 1"

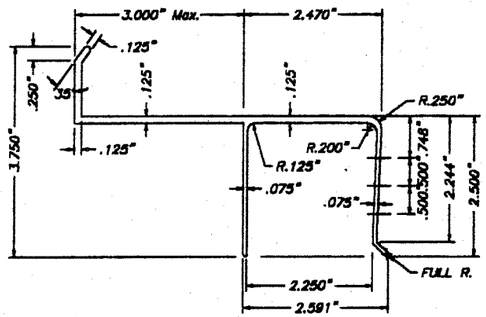

③ 3" Max. "U" BUILD OUT
SCALE : 3/8" = 1"

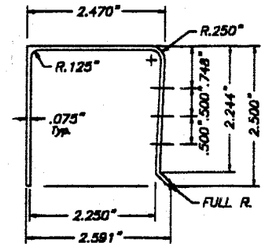

④ "U" HEADER
SCALE : 3/8" = 1"

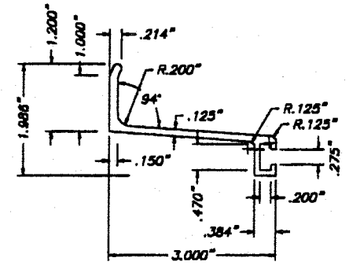

⑤ 3" ANGLE BUILD OUT BRACKET
SCALE : 3/8" = 1"

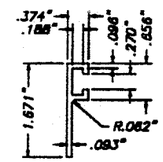

⑥ "F" TRACK
SCALE : 3/8" = 1"

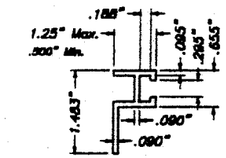

6A 1 1/4" MAX. B. O. "F" TRACK
SCALE : 3/8" = 1"

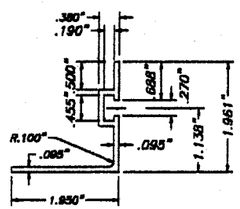

⑦ REVERSED "F" ANGLE TRACK
SCALE : 3/8" = 1"

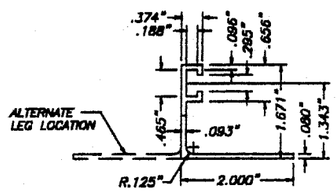

⑧ "F" TRACK ANGLE
SCALE : 3/8" = 1"

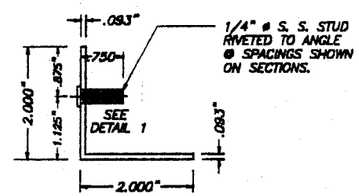

⑨ STUDDED ANGLE
6063-T5 Alum. ALLOY
SCALE : 3/8" = 1"

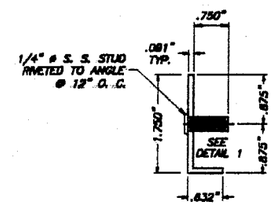

9A MINI WALL 1.75"x0.632" ANGLE WITH STUD
SCALE: 1/2" = 1"

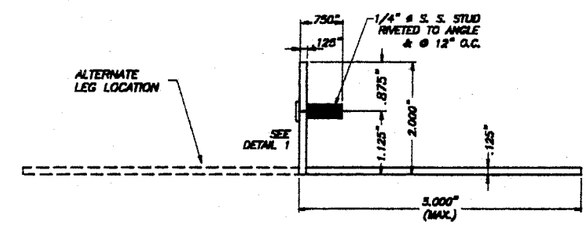

⑩ 2"x5"(MAX.)x1/8" ANGLE WITH STUD
SCALE: 3/8" = 1"

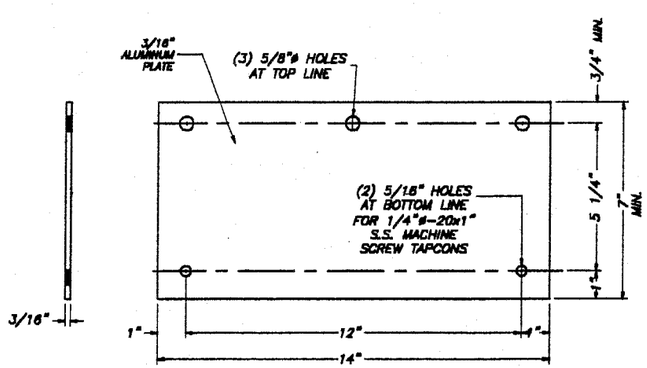

⑪ 3/16"x7"x14" LONG WALL PLATE
SCALE: 3/16" = 1"

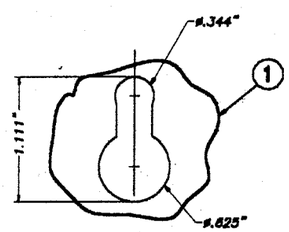

⑫ KEY HOLE AT PANEL

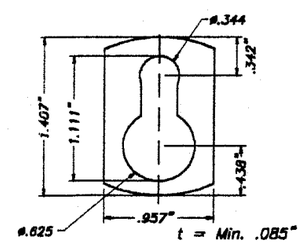

⑬ KEY HOLE WASHER
3105-H154 Alum. ALLOY
SCALE : 3/4" = 1"

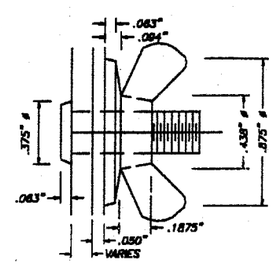

DETAIL 1: STUD W/ WING NUT

Approved as complying with the Florida Buiding Code
Date 03/21/2002
NOA# 01-0516.06
Miami Dade Product Control Division
By Helmy A. Moler

COMPONENTS

2/27/02

MIAMI-DADE COUNTY

TILTECO INC.
TILLIT TESTING & ENGINEERING COMPANY
8585 N.W. 38th. St., Sta. 217, VIRGINIA GARDENS, FL 33166
Phone : (305)871-1530 . Fax : (305)871-1531
EB-0006719
WALTER A. TILLIT Jr. P. E.
FLORIDA Lic. # 44167

0.050" SOLID BERTHA ALUMINUM STORM PANEL

AS SHOWN SCALE

EASTERN METAL SUPPLY, INC
4268 WEST ROADS DRIVE
RIVIERA BEACH, FL 33407

8/27/01 DATE

01-058 DRAWING No

REV. No	DESCRIPTION	DATE	REV. No	DESCRIPTION	DATE
1	OLD 98-172	8/27/01	3	–	–
2	GENERAL	1/18/02	4	–	–

SHEET 2 OF 15

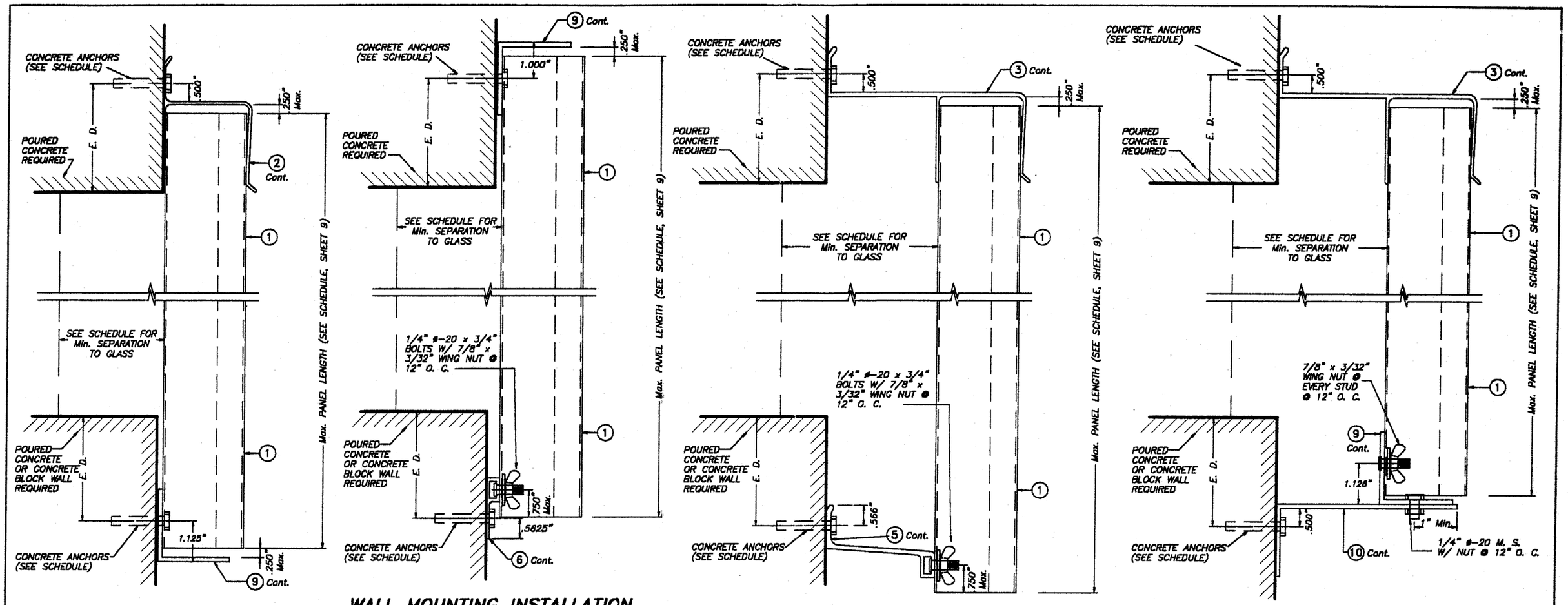

SECTION @ ANCHOR

WALL MOUNTING INSTALLATION
SECTION 2

SCALE : 3/8" = 1"

BUILD OUT INSTALLATION
SECTION 3

SCALE : 3/8" = 1"

BUILD OUT INSTALLATION
SECTION 4

SCALE : 3/8" = 1"

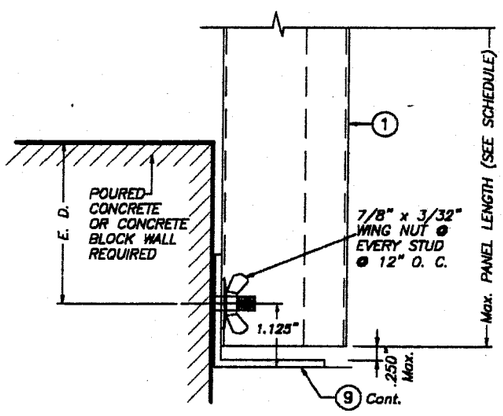

SECTION @ STUD

WALL MOUNTING INSTALLATION
SECTION 1

SCALE : 3/8" = 1"

NOTE : DETAIL OF SECTION @ STUD VALID ALSO FOR WALL MOUNTING INSTALLATION – SECTION 2 (TOP)

E. D. = EDGE DISTANCE (SEE SCHEDULE ON SHEETS 10 & 11 OF 15)

NOTE FOR COMBINATION OF SECTIONS :

WALL MOUNTING SECTIONS CAN BE COMBINED IN ANY WAY TO SUIT ANY INSTALLATION.

Approved as complying with the Florida Buiding Code
Date 03/21/2002
NOA# 01-0516.06
Miami Dade Product Control Division
By [signature]

MIAMI–DADE COUNTY

TILTECO INC.
TILLIT TESTING & ENGINEERING COMPANY
6595 N.W. 36th. St., Ste. 217, VIRGINIA GARDENS, FL 33166
Phone : (305)871-1530 . Fax : (305)871-1531
EB-0006719
WALTER A. TILLIT Jr. P. E.
FLORIDA Lic. # 44167

0.050" SOLID BERTHA ALUMINUM STORM PANEL

EASTERN METAL SUPPLY, INC
4268 WEST ROADS DRIVE
RIVIERA BEACH, FL 33407

REV. No	DESCRIPTION	DATE	REV. No	DESCRIPTION	DATE
1	OLD 98-172	8/27/01	3	–	–
2	GENERAL	1/18/02	4	–	–

AS SHOWN SCALE
8/27/01 DATE
01-058 DRAWING No
SHEET 3 OF 15

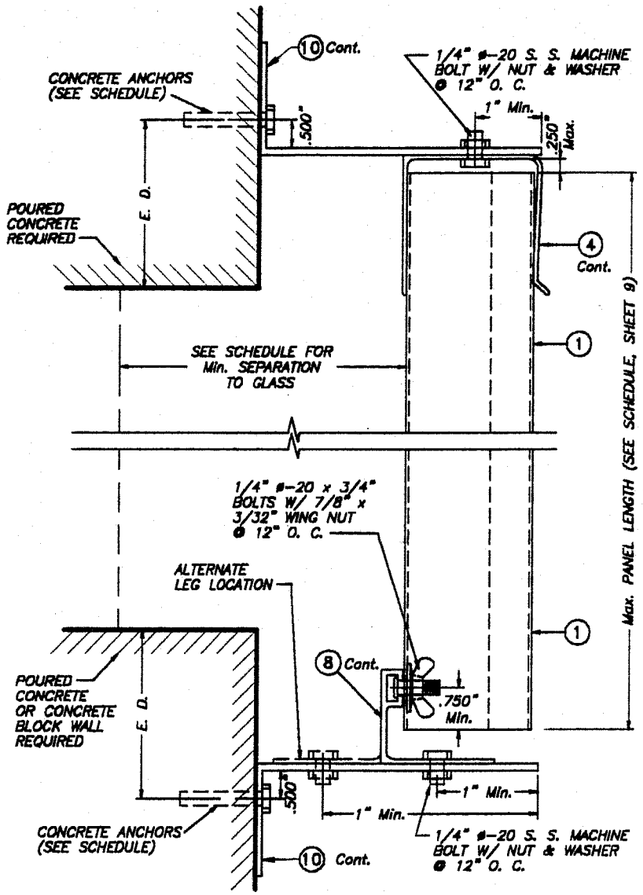

BUILD OUT INSTALLATION – SECTION 5

SCALE : 3/8" = 1"

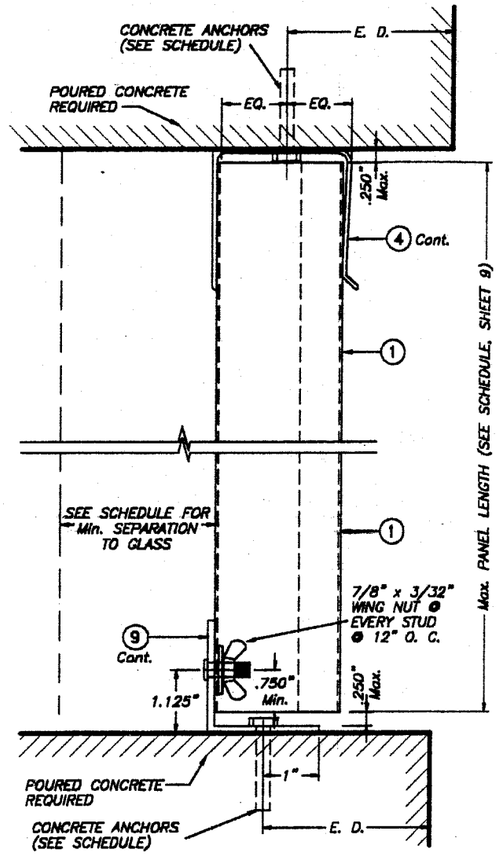

CEILING & FLOOR MOUNTING INSTALLATION – SECTION 6

SCALE : 3/8" = 1"

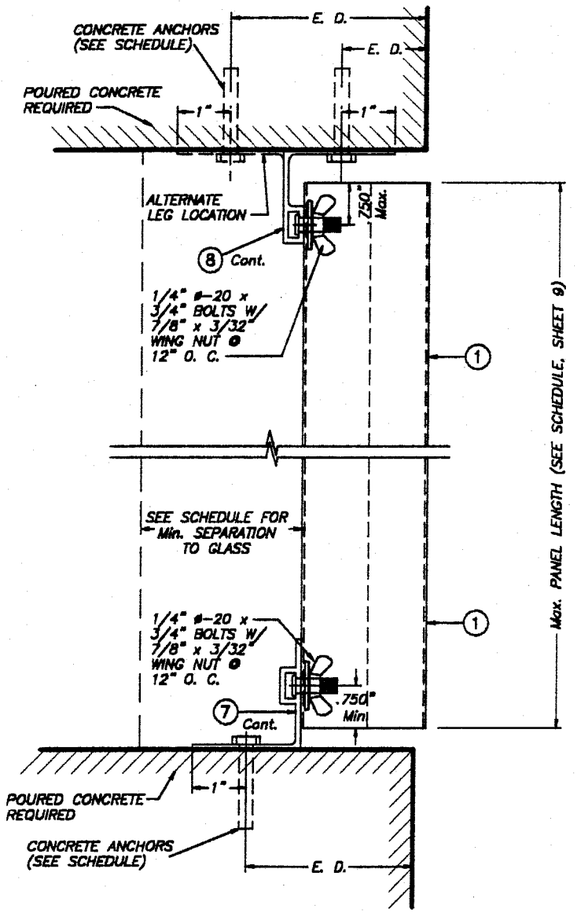

CEILING & FLOOR MOUNTING INSTALLATION – SECTION 7

SCALE : 3/8" = 1"

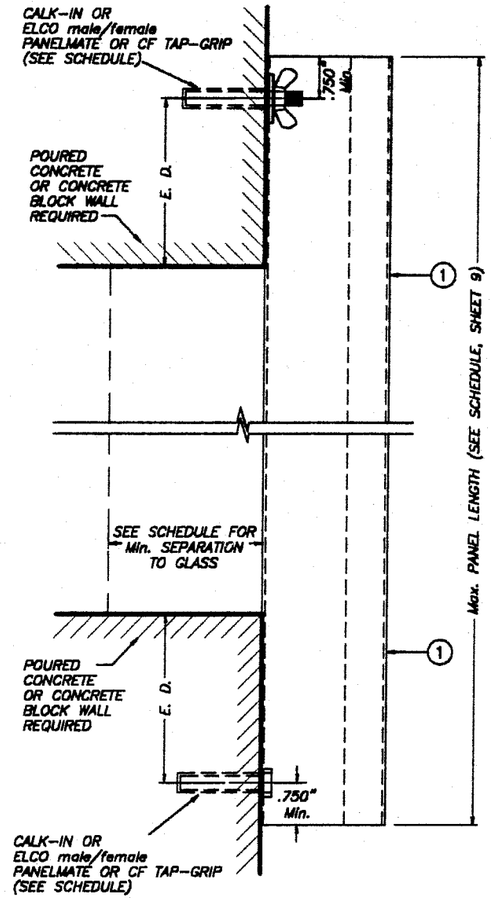

WALL MOUNTING INSTALLATION (D. M.) – SECTION 8

SCALE : 3/8" = 1"

E. D. = EDGE DISTANCE (SEE SCHEDULE ON SHEETS 10 & 11 OF 15)

NOTE FOR COMBINATION OF SECTIONS :

WALL/FLOOR/CEILING MOUNTING SECTIONS CAN BE COMBINED IN ANY WAY TO SUIT ANY INSTALLATION.

Approved as complying with the Florida Building Code
Date 03/21/2002
NOA# 01-0516.06
Miami Dade Product Control Division
By [signature]

MIAMI-DADE COUNTY

TILTECO INC.
TILLIT TESTING & ENGINEERING COMPANY
6598 N.W. 38th. St., Ste. 217, VIRGINIA GARDENS, FL 33166
Phone : (305)871-1530 , Fax : (305)871-1531
EB-0008719
WALTER A. TILLIT Jr. P. E.
FLORIDA Lic. # 44167

[signature] 7/24/02

0.050" SOLID BERTHA ALUMINUM STORM PANEL

AS SHOWN SCALE

EASTERN METAL SUPPLY, INC
4268 WEST ROADS DRIVE
RIVIERA BEACH, FL 33407

8/27/01 DATE

01-058 DRAWING No

REV. No	DESCRIPTION	DATE	REV. No	DESCRIPTION	DATE
1	OLD 98-172	8/27/01	3	–	–
2	GENERAL	1/18/02	4	–	–

SHEET 4 OF 15

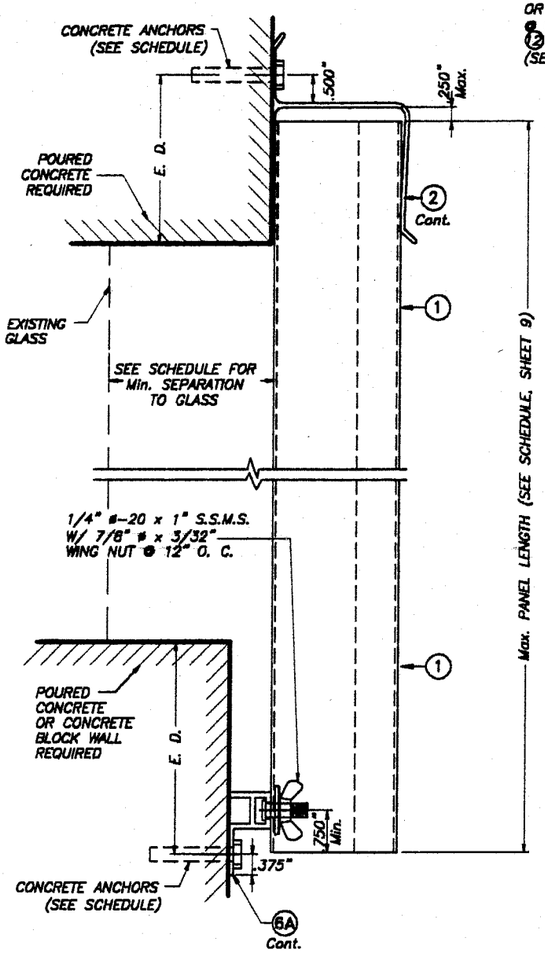

WALL MOUNTING INSTALLATION SECTION 9

SCALE : 3/8" = 1"

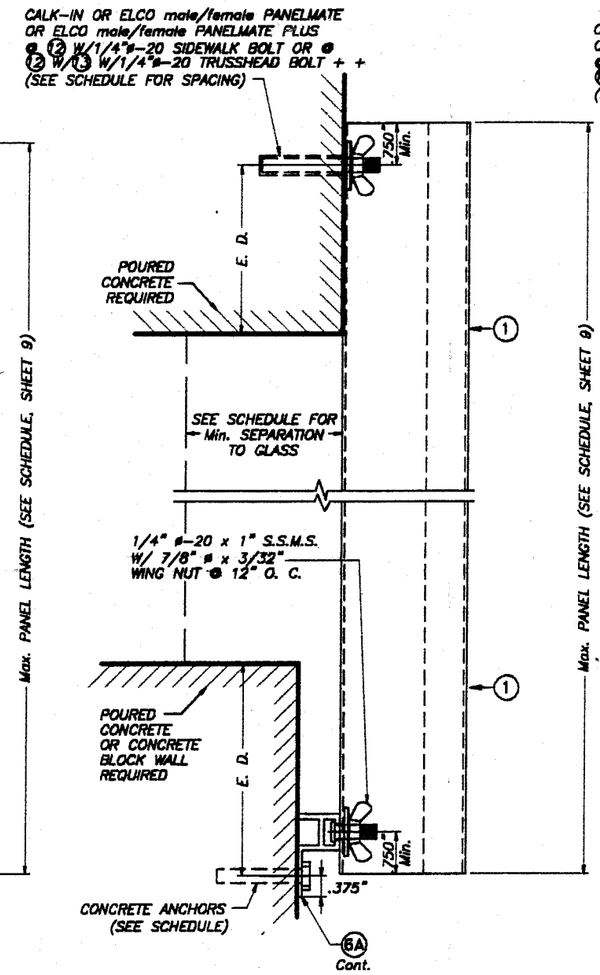

WALL MOUNTING INSTALLATION SECTION 10

SCALE : 3/8" = 1"

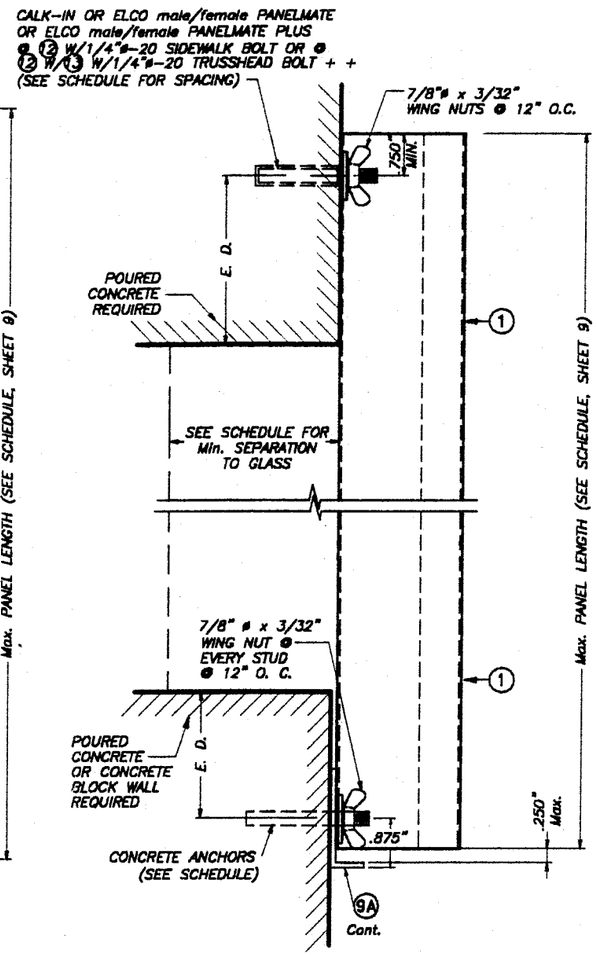

WALL MOUNTING INSTALLATION SECTION 11

SCALE : 3/8" = 1"

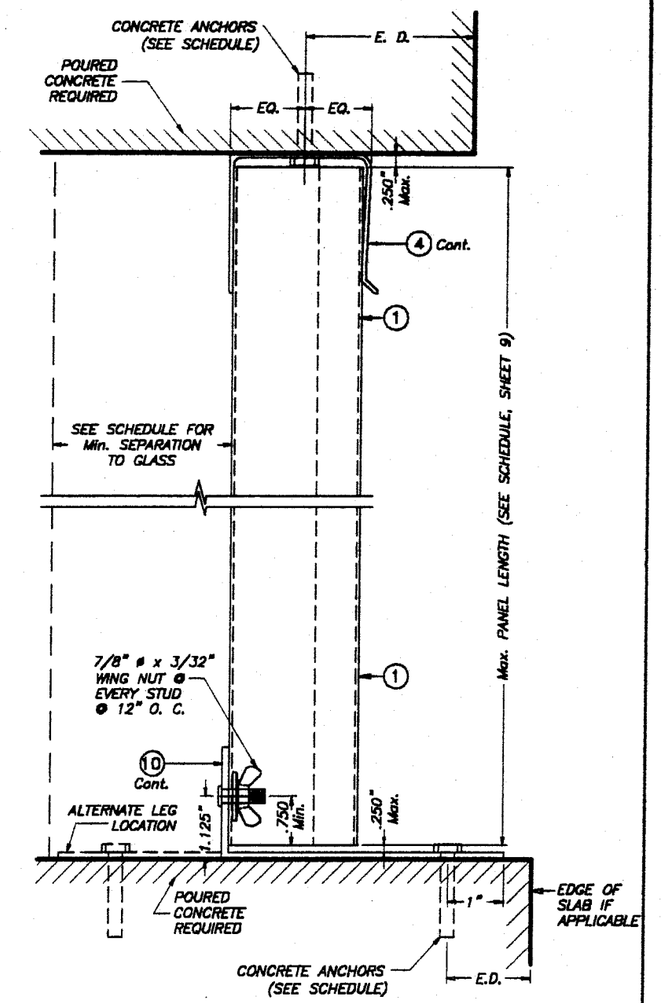

CEILING & FLOOR MOUNTING INSTALLATION SECTION 12

SCALE : 3/8" = 1"

Approved as complying with the Florida Buiding Code
Date 03/21/2002
NOA# 01-0516.06
Miami Dade Product Control Division
By

MIAMI-DADE COUNTY

E. D. = EDGE DISTANCE (SEE SCHEDULE ON SHEETS 10 & 11 OF 15)

NOTE FOR COMBINATION OF SECTIONS :

WALL/FLOOR/CEILING MOUNTING SECTIONS CAN BE COMBINED IN ANY WAY TO SUIT ANY INSTALLATION.

+ +
SIDE WALK BOLTS ARE 3/4"øx3/32"THICK HEAD MACHINE SCREW W/LENGTH AS PER NOTES A.2 & B.2 (SHEET 1)
+ +
TRUSS HEAD BOLTS ARE 1/2"øx1/8"THICK HEAD MACHINE SCREW W/LENGTH AS PER NOTES A.2 & B.2 (SHEET 1)

2/28/02

TILTECO INC.
TILLIT TESTING & ENGINEERING COMPANY
6565 N.W. 38th. St., Ste. 217, VIRGINIA GARDENS, FL 33166
Phone : (305)871-1530 . Fax : (305)871-1531
EB-0008719
WALTER A. TILLIT Jr. P. E.
FLORIDA Lic. # 44167

0.050" SOLID BERTHA ALUMINUM STORM PANEL

AS SHOWN SCALE

EASTERN METAL SUPPLY, INC
4268 WEST ROADS DRIVE
RIVIERA BEACH, FL 33407

8/27/01 DATE

01-058 DRAWING No

REV. No	DESCRIPTION	DATE	REV. No	DESCRIPTION	DATE
1	OLD 98-172	8/27/01	3	–	–
2	GENERAL	1/18/02	4	–	–

SHEET 5 OF 15

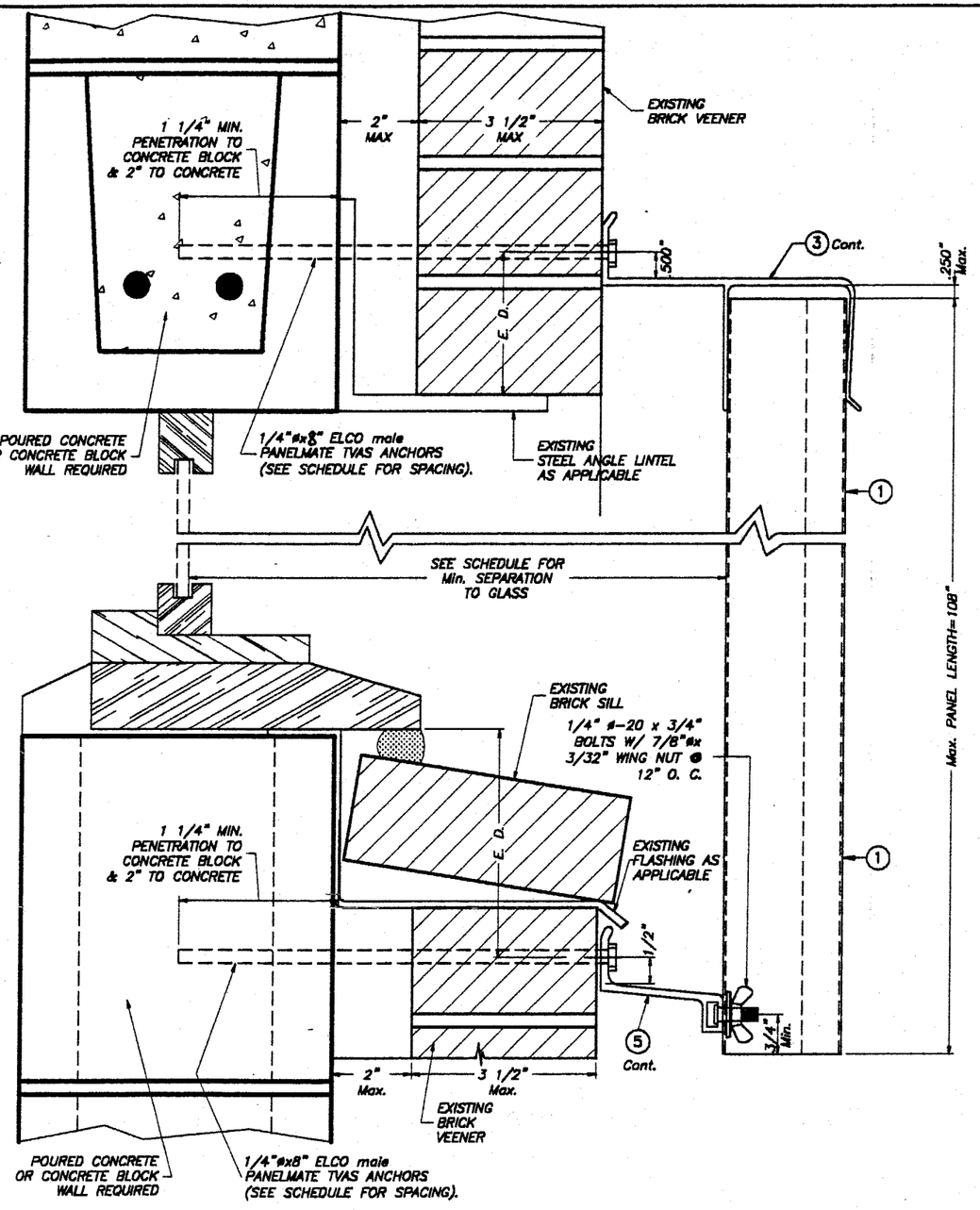

BUILD OUT INSTALLATION
SECTION 13

SCALE : 3/8" = 1"

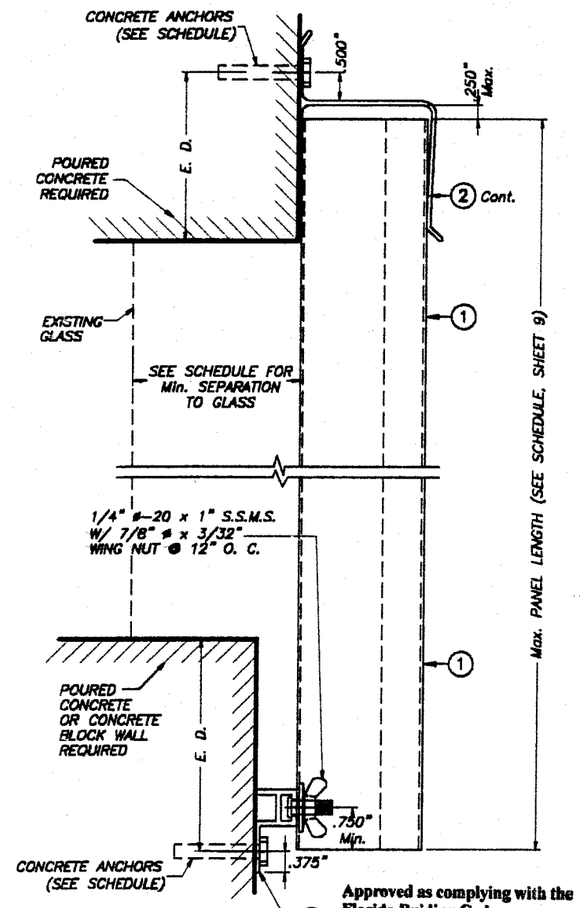

Approved as complying with the Florida Buiding Code
Date 03/21/2002
NOA# 01-0516.06
Miami Dade Product Control Division
By

SECTION 14A

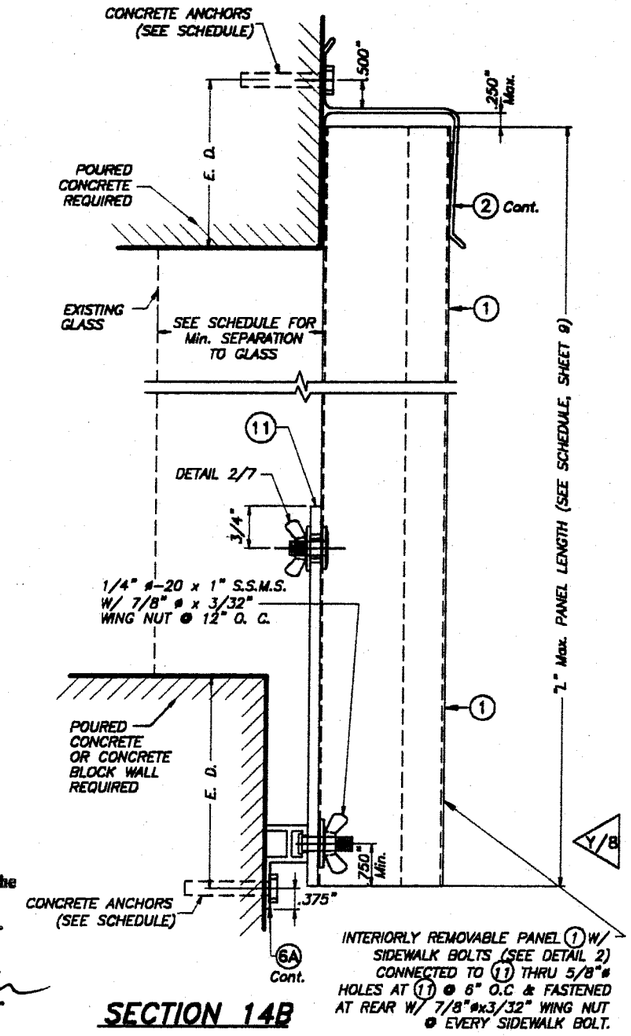

SECTION 14B

WALL MOUNTING INSTALLATIONS
SECTIONS 14

SCALE : 3/8" = 1"

INSTALLATIONS VALID FOR PANELS 1 USED JOINTLY WITH INTERIORLY REMOVABLE PANELS 1

E. D. = EDGE DISTANCE (SEE SCHEDULE ON SHEETS 10 & 11 OF 15)

NOTE FOR COMBINATION OF SECTIONS :

WALL MOUNTING SECTIONS CAN BE COMBINED IN ANY WAY TO SUIT ANY INSTALLATION.

MIAMI-DADE COUNTY

TILTECO INC.
TILLIT TESTING & ENGINEERING COMPANY
6585 N.W. 36th. St., Ste. 217, VIRGINIA GARDENS, FL 33166
Phone : (305)871-1530 . Fax : (305)871-1531
EB-0006719
WALTER A. TILLIT Jr. P. E.
FLORIDA Lic. # 44167

0.050" SOLID BERTHA ALUMINUM STORM PANEL

AS SHOWN SCALE

EASTERN METAL SUPPLY, INC
4268 WEST ROADS DRIVE
RIVIERA BEACH, FL 33407

8/27/01 DATE

01-058 DRAWING No

REV. No	DESCRIPTION	DATE	REV. No	DESCRIPTION	DATE
1	OLD 98-172	8/27/01	3	–	–
2	GENERAL	1/18/02	4	–	–

SHEET 6 OF 15

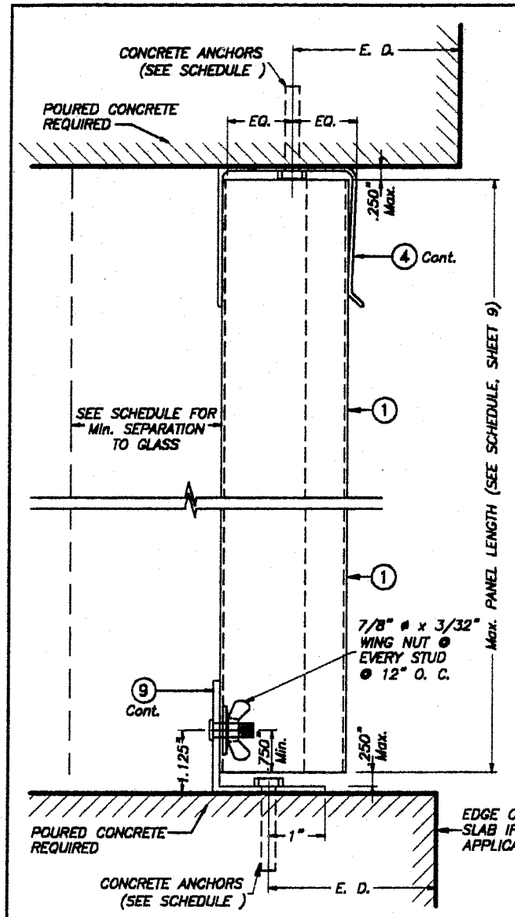

SECTION 15A

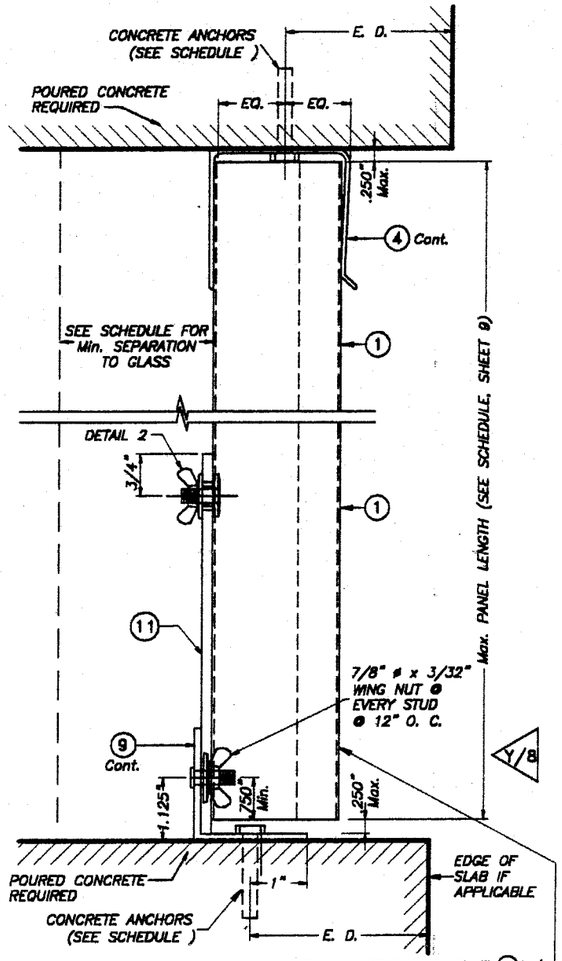

SECTION 15B

INTERIORLY REMOVABLE PANEL (1) W/ SIDEWALK BOLTS (SEE DETAIL 2) CONNECTED TO (11) THRU 5/8"ø HOLES AT (11) @ 6" O.C & FASTENED AT REAR W/ 7/8"øx3/32" WING NUT @ EVERY SIDEWALK BOLT.

CEILING & FLOOR MOUNTING INSTALLATIONS

SECTIONS 15

SCALE : 3/8" = 1"

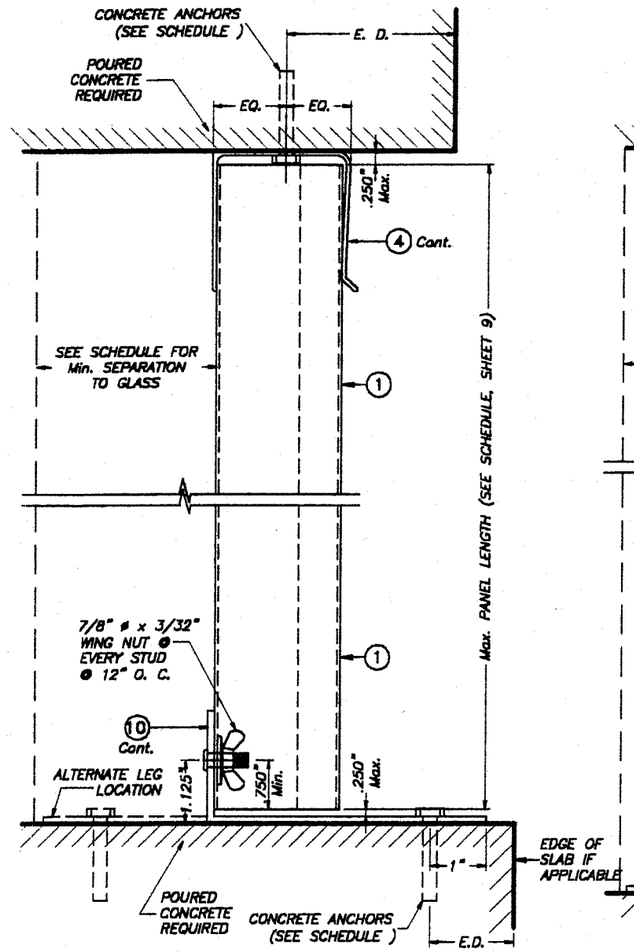

SECTION 16A

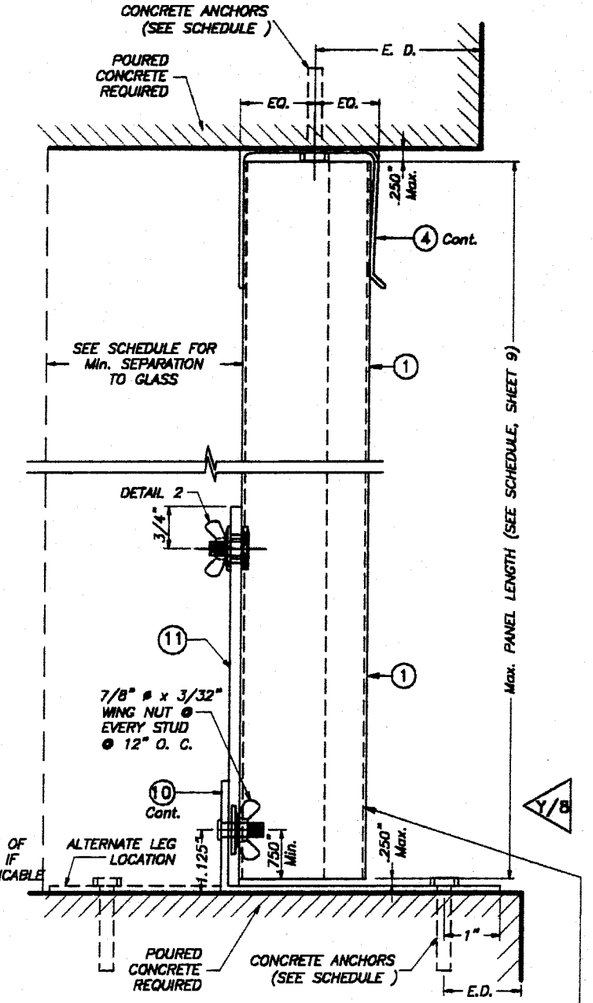

SECTION 16B

INTERIORLY REMOVABLE PANEL (1) W/ SIDEWALK BOLTS (SEE DETAIL 2) CONNECTED TO (11) THRU 5/8"ø HOLES AT (11) @ 6" O.C & FASTENED AT REAR W/ 7/8"øx3/32" WING NUT @ EVERY SIDEWALK BOLT.

CEILING & FLOOR MOUNTING INSTALLATIONS

SECTIONS 16

SCALE : 3/8" = 1"

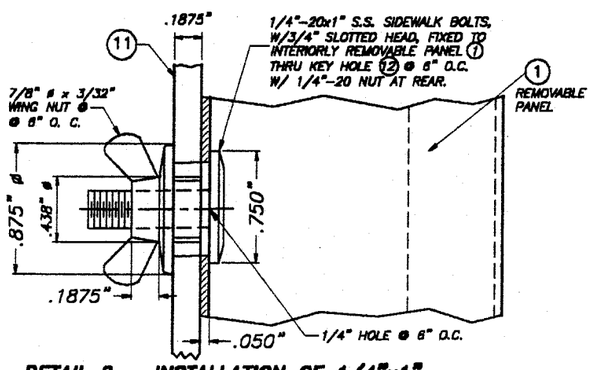

DETAIL 2 – INSTALLATION OF 1/4"x1" SIDEWALK BOLTS @ REMOVABLE PANEL

SCALE: 1" = 1"

INSTALLATIONS VALID FOR PANELS (1) USED JOINTLY WITH INTERIORLY REMOVABLE PANELS (1)

Approved as complying with the
Florida Building Code
Date 03/21/2002
NOA# 01-0516.06
Miami Dade Product Control
Division
By

E. D. = EDGE DISTANCE (SEE SCHEDULE ON SHEET 10 & 11 OF 15)

NOTE FOR COMBINATION OF SECTIONS :

FLOOR/CEILING MOUNTING SECTIONS CAN BE COMBINED IN ANY WAY TO SUIT ANY INSTALLATION.

3/27/02

MIAMI–DADE COUNTY

TILTECO INC.
TILLIT TESTING & ENGINEERING COMPANY
8585 N.W. 38th. St., Sts. 217, VIRGINIA GARDENS, FL 33166
Phone : (305)871-1530 . Fax : (305)871-1531
EB-0006719
WALTER A. TILLIT Jr. P. E.
FLORIDA Lic. # 44167

0.050" SOLID BERTHA ALUMINUM STORM PANEL

AS SHOWN SCALE

EASTERN METAL SUPPLY, INC
4268 WEST ROADS DRIVE
RIVIERA BEACH, FL 33407

8/27/01 DATE

01-058 DRAWING No

REV. No	DESCRIPTION	DATE	REV. No	DESCRIPTION	DATE
1	OLD 96-172	8/27/01	3	–	–
2	GENERAL	1/18/02	4	–	–

SHEET 7 OF 15

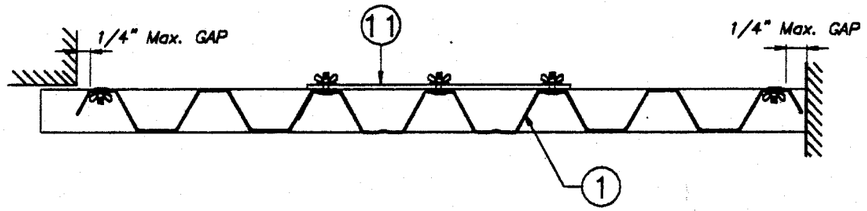

SECTION B–B

SCALE : 1/8" = 1"

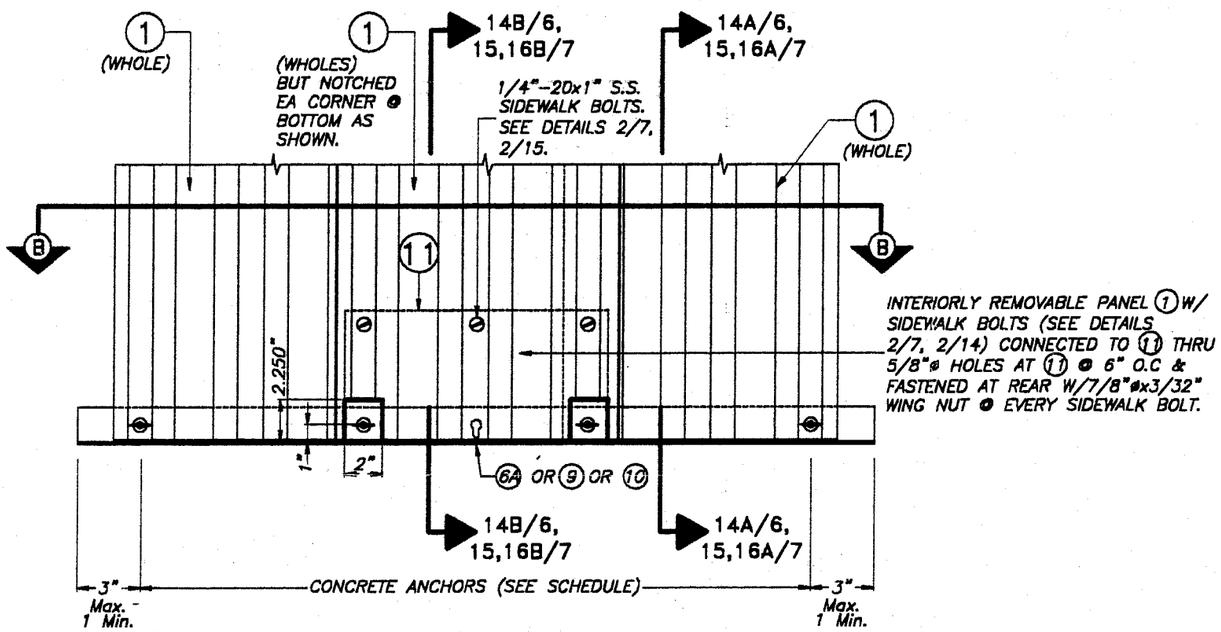

INTERIORLY REMOVABLE STORM PANEL PARTIAL ELEVATION Y

SCALE : 1/8" = 1"

Approved as complying with the
Florida Buiding Code
Date 03/21/2002
NOA# 01-0516.06
Miami Dade Product Control
Division
By

MIAMI–DADE COUNTY

TILTECO INC. TILLIT TESTING & ENGINEERING COMPANY 8585 N.W. 38th. St., Ste. 217, VIRGINIA GARDENS, FL 33166 Phone : (305)871–1530 . Fax : (305)871–1531 EB–0006719 WALTER A. TILLIT Jr. P. E. FLORIDA Lic. # 44167	0.050" SOLID BERTHA ALUMINUM STORM PANEL	AS SHOWN SCALE
	EASTERN METAL SUPPLY, INC 4268 WEST ROADS DRIVE RIVIERA BEACH, FL 33407	8/27/01 DATE
		01–058 DRAWING No
		SHEET 8 OF 15

REV. No	DESCRIPTION	DATE	REV. No	DESCRIPTION	DATE
1	OLD 98–172	8/27/01	3	–	–
2	GENERAL	1/18/03	4	–	–

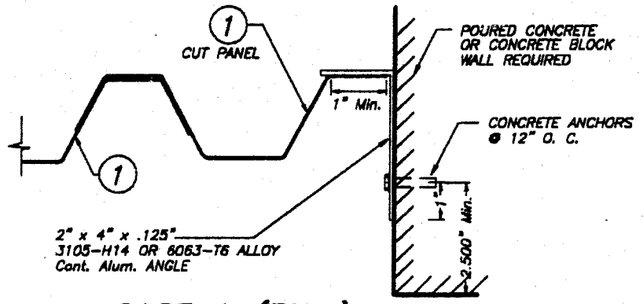

CASE A (Plan)

SCALE: 1/4" = 1"

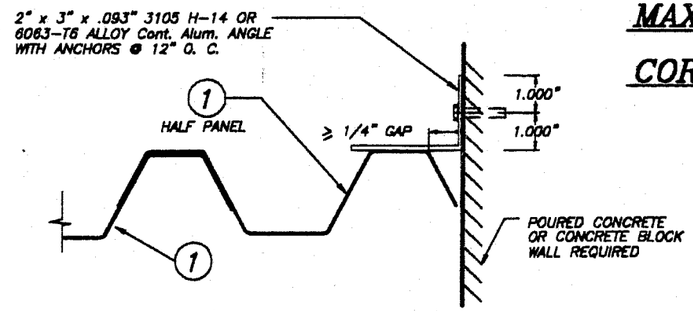

CASE D (Plan)

SCALE: 1/4" = 1"

MAXIMUM DESIGN PRESSURE RATING "W" (p.s.f.) AND CORRESPONDING MAXIMUM PANEL LENGTH "L" SCHEDULE

MAXIMUM DESIGN PRESSURE RATING W (p.s.f.)	Max. PANEL LENGTH L (ft.) (SEE SECTIONS)	MINIMUM SEPARATION TO GLASS	APPLICABLE TO SECTIONS # & ANY COMBINATION OF THEM
+65.0, −77.0	8'−0" OR LESS	2 1/4"	1 THRU 8
+65.0, −77.0	9'−0" OR LESS	3 11/16"	1 THRU 8
+65.0, −72.0	9'−0" OR LESS	3 1/2"	11
+62.0, −73.3	10'−0" OR LESS	3 7/8"	2, 6, 7 & 8
+63.5, −63.5	9'−0" OR LESS	3 1/2"	9, 14, 10
+65.0, −65.0	9'−0" OR LESS	3 1/2"	12, 15, 16
+63.5, −63.5	9'−0" OR LESS	3 3/4"	13

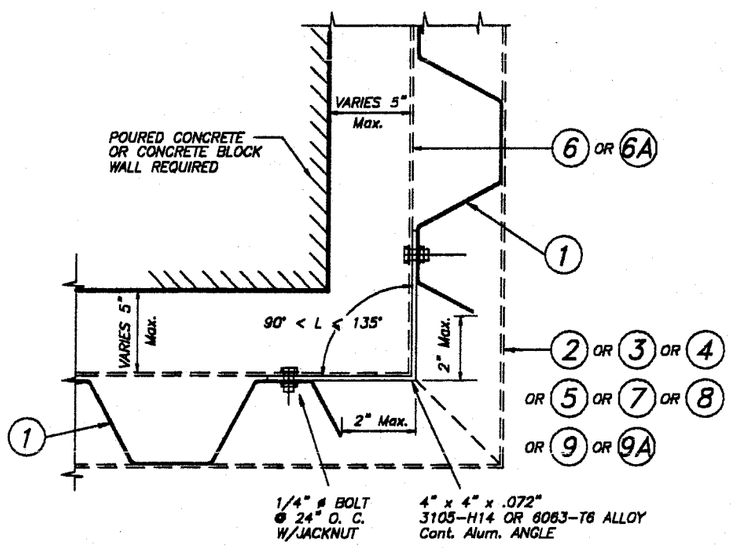

CASE B (Plan)

SCALE: 1/4" = 1"

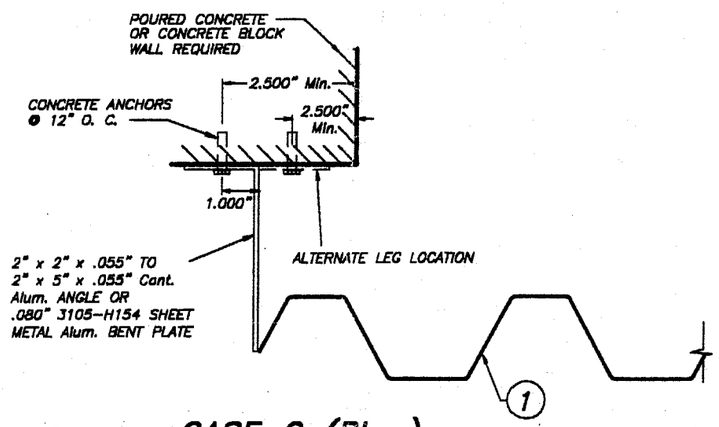

CASE C (Plan)

SCALE: 1/4" = 1"

Approved as complying with the Florida Building Code
Date 03/21/2002
NOA# 01-0516.06
Miami Dade Product Control Division
By

END CLOSURES DETAILS

MIAMI-DADE COUNTY

TILTECO INC.
TILLIT TESTING & ENGINEERING COMPANY
6595 N.W. 36th. St., Ste. 217, VIRGINIA GARDENS, FL 33166
Phone : (305)871-1530 , Fax : (305)871-1531
EB-0006719
WALTER A. TILLIT Jr. P. E.
FLORIDA Lic. # 44167

0.050" SOLID BERTHA ALUMINUM STORM PANEL

AS SHOWN SCALE

EASTERN METAL SUPPLY, INC
4268 WEST ROADS DRIVE
RIVIERA BEACH, FL 33407

8/27/01 DATE

01-058 DRAWING No

REV. No	DESCRIPTION	DATE	REV. No	DESCRIPTION	DATE
1	OLD 98-172	8/27/01	3	–	–
2	GENERAL	1/18/02	4	–	–

SHEET 9 OF 15

MAXIMUM DESIGN PRESSURE RATING "W" (p.s.f.) AND CORRESPONDING MAXIMUM ANCHOR SPACING SCHEDULE FOR INSTALLATIONS IN CONCRETE AND CONCRETE BLOCK STRUCTURES

E. D. = EDGE DISTANCE

MAXIMUM DESIGN LOAD W (p.s.f.)	MAXIMUM ANCHORS SPACING FOR E. D. = 3 1/2"*																APPLICABLE TO SECTIONS # & ANY COMBINATION OF THEM	MAXIMUM PANEL LENGTH "L" (ft.)
	REGULAR TAPCONS		CRETE-FLEX SS4		ZAMAC NAILIN		CALK-IN		CF TAP-GRIP		PANELMATES		PANELMATE PLUS		410 S.S. TAPCON			
	TO CONCRETE	TO MASONRY	TO CONCRETE	TO MASONRY	TO CONCRETE	TO MASONRY	TO CONCRETE	TO MASONRY	TO CONCRETE	TO MASONRY	TO CONCRETE	TO MASONRY	TO CONCRETE	TO MASONRY	TO CONCRETE	TO MASONRY		
+63.5, -63.5	8"	N/A	N/A	N/A	4"	N/A	8"	N/A	5"	N/A	3 1/2"	N/A	N/A	N/A	N/A	N/A	1 (TOP)	9'-0" OR LESS
	12"	8"	N/A	N/A	12"	10"	12"	12"	12"	8"	11"	11"	12"	12"	N/A	N/A	1 (BOTTOM)	
	12"	N/A	N/A	N/A	12"	N/A	12"	N/A	12"	N/A	11"	N/A	N/A	N/A	N/A	N/A	2 (TOP)	
	12"	8"	N/A	N/A	12"	10"	12"	12"	12"	8"	11"	11"	12"	12"	N/A	N/A	2 (BOTTOM)	
	12"	N/A	N/A	N/A	12"	N/A	12"	N/A	12"	N/A	11"	N/A	N/A	N/A	N/A	N/A	3 (TOP)	
	12"	8"	N/A	N/A	12"	10"	12"	12"	12"	8"	11"	11"	12"	12"	N/A	N/A	3 (BOTTOM)	
	12"	N/A	N/A	N/A	12"	N/A	12"	N/A	12"	N/A	11"	N/A	N/A	N/A	N/A	N/A	4 (TOP)	
	12"	8"	N/A	N/A	12"	10"	12"	12"	12"	8"	11"	11"	12"	12"	N/A	N/A	4 (BOTTOM)	
	12"	N/A	N/A	N/A	12"	N/A	12"	N/A	12"	N/A	11"	N/A	N/A	N/A	N/A	N/A	5 (TOP)	
	12"	8"	N/A	N/A	12"	10"	12"	12"	12"	8"	11"	11"	12"	12"	N/A	N/A	5 (BOTTOM)	
	11"	N/A	12"	N/A	7 1/2"	N/A	11 1/2"	N/A	8 1/2"	N/A	12"	N/A	12"	N/A	12"	N/A	6 (TOP/BOTTOM)	
	10"	N/A	12"	N/A	6 1/2"	N/A	10 1/2"	N/A	7"	N/A	12"	N/A	12"	N/A	11"	N/A	7 (TOP/BOTTOM)	
	N/A	N/A	N/A	N/A	N/A	N/A	12"	12"	12"	6"	6"	6"	12"	12"	N/A	N/A	8 (TOP/BOTTOM)	
	12"	N/A	12"	N/A	N/A	N/A	12"	N/A	N/A	N/A	12"	N/A	12"	N/A	12"	N/A	9 (TOP)	
	12"	8"	12"	12"	N/A	N/A	12"	12"	N/A	N/A	12"	11"	12"	9"	12"	10"	9 (BOTTOM)	
	N/A	N/A	N/A	N/A	N/A	N/A	12"	6"	N/A	N/A	12"	6"	12"	6"	N/A	N/A	10 (TOP)	
	12"	7 1/2"	12"	12"	N/A	N/A	12"	10 1/2"	N/A	N/A	12"	10"	12"	8 1/2"	12"	9"	10 (BOTTOM)	
	N/A	N/A	N/A	N/A	N/A	N/A	N/A	N/A	N/A	N/A	12"	11"	N/A	N/A	N/A	N/A	13 (TOP)	
	N/A	N/A	N/A	N/A	N/A	N/A	N/A	N/A	N/A	N/A	12"	6"	N/A	N/A	N/A	N/A	13 (BOTTOM)	
	12"	N/A	12"	N/A	N/A	N/A	12"	N/A	N/A	N/A	12"	N/A	12"	N/A	12"	N/A	14 (TOP)	
	12"	8"	12"	12"	N/A	N/A	12"	12"	N/A	N/A	12"	11"	12"	9"	12"	10"	14 (BOTTOM)	
	12"	N/A	12"	N/A	N/A	N/A	12"	N/A	N/A	N/A	12"	N/A	12"	N/A	12"	N/A	12 (TOP)	
	11"	N/A	12"	N/A	N/A	N/A	11 1/2"	N/A	N/A	N/A	12"	N/A	12"	N/A	12"	N/A	12 (BOTTOM)	
	12"	N/A	12"	N/A	N/A	N/A	12"	N/A	N/A	N/A	12"	N/A	12"	N/A	12"	N/A	15 (TOP)	
	11"	N/A	12"	N/A	N/A	N/A	11 1/2"	N/A	N/A	N/A	12"	N/A	12"	N/A	12"	N/A	15 (BOTTOM)	
	12"	N/A	12"	N/A	N/A	N/A	12"	N/A	N/A	N/A	12"	N/A	12"	N/A	12"	N/A	16 (TOP)	
	11"	N/A	12"	N/A	N/A	N/A	11 1/2"	N/A	N/A	N/A	12"	N/A	12"	N/A	12"	N/A	16 (BOTTOM)	
+65.0, -65.0	6"	N/A	N/A	N/A	6"	N/A	6"	N/A	6"	N/A	6"	N/A	N/A	N/A	N/A	N/A	2 (TOP)	9'-0" TO 10'-0"
	6"	6"	N/A	N/A	6"	6"	6"	6"	6"	6"	6"	6"	N/A	N/A	N/A	N/A	2 (BOTTOM)	
	6"	N/A	N/A	N/A	6"	N/A	6"	N/A	6"	N/A	5 1/2"	N/A	N/A	N/A	N/A	N/A	6 (TOP/BOTTOM)	
	6"	N/A	N/A	N/A	5 1/2"	N/A	6"	N/A	6"	N/A	4 1/2"	N/A	N/A	N/A	N/A	N/A	7 (TOP/BOTTOM)	
	N/A	N/A	N/A	N/A	N/A	N/A	6"	6"	6"	6"	6"	5"	N/A	N/A	N/A	N/A	8 (TOP/BOTTOM)	

* MAXIMUM ANCHOR SPACINGS ARE VALID FOR 3 1/2" EDGE DISTANCE. FOR E. D. LESS THAN 3 1/2", REDUCE ANCHOR SPACING BY MULTIPLYING SPACING SHOWN ON SCHEDULE BY THE FOLLOWING FACTORS. (NOTE: Min. E. D. FOR CALK-IN ANCHORS IS 2 1/2")
FOR THIS OPERATION TO BE POSIBLE, REDUCED SPACING OBTAINED USING FACTOR SHALL NOT BE LESS THAN MINIMUM SPACING INDICATED FOR EACH ANCHOR TYPE AT ANCHORS LEGEND.

ACTUAL E. D.	FACTOR		
	REGULAR TAPCON, 410 S.S. TAPCON, CRETE-FLEX SS4, ZAMAC NAILING, PANELMATE OR PANELMATE PLUS.	CALK-IN	CF TAP-GRIP
3"	.86	.75	1.00
2 1/2"	.71	.50	.80
2"	.50	–	–

ANCHORS LEGEND

ANCHOR TYPE	Min. ANCHOR SPACING
REGULAR TAPCON, 410 S.S. TAPCON, CRETE-FLEX SS4, ZAMAC NAILING, CF TAP-GRIP, PANELMATE OR PANELMATE PLUS.	3.0"
CALK-IN	2.5"

Approved as complying with the Florida Buiding Code
Date 03/21/2002
NOA# 01-0516.06
Miami Dade Product Control Division
By Helmy H. Nader

MIAMI-DADE COUNTY

TILTECO INC.
TILLIT TESTING & ENGINEERING COMPANY
6595 N.W. 36th. St., Ste. 217, VIRGINIA GARDENS, FL 33166
Phone : (305)871-1630 . Fax : (305)871-1631
EB-0006719
WALTER A. TILLIT Jr. P. E.
FLORIDA Lic. # 44167

0.050" SOLID BERTHA ALUMINUM STORM PANEL

EASTERN METAL SUPPLY, INC
4268 WEST ROADS DRIVE
RIVIERA BEACH, FL 33407

REV. No	DESCRIPTION	DATE	REV. No	DESCRIPTION	DATE
1	OLD 98-172	8/27/01	3	–	–
2	GENERAL	1/18/02	4	–	–

AS SHOWN SCALE

8/27/01 DATE

01-058 DRAWING No

SHEET 10 OF 15

MAXIMUM DESIGN PRESSURE RATING "W" (p.s.f.) AND CORRESPONDING MAXIMUM ANCHOR SPACING SCHEDULE FOR INSTALLATIONS INTO CONCRETE AND CONCRETE BLOCK STRUCTURES

MAXIMUM DESIGN LOAD W (p.s.f.)	MAXIMUM ANCHORS SPACING FOR E. D. = 3 1/2"*																APPLICABLE TO SECTIONS # & ANY COMBINATION OF THEM	MAXIMUM PANEL LENGTH "L" (ft.)
	REGULAR TAPCONS		CRETE-FLEX SS4		ZAMAC NAILIN		CALK-IN		CF TAP-GRIP		PANELMATES		PANELMATE PLUS		410 S.S. TAPCON			
	TO CONCRETE	TO MASONRY	TO CONCRETE	TO MASONRY	TO CONCRETE	TO MASONRY	TO CONCRETE	TO MASONRY	TO CONCRETE	TO MASONRY	TO CONCRETE	TO MASONRY	TO CONCRETE	TO MASONRY	TO CONCRETE	TO MASONRY		
+65.0, -77.0	6"	N/A	N/A	N/A	3"	N/A	6"	N/A	3 1/2"	N/A	2 1/2"	N/A	N/A	N/A	N/A	N/A	1 (TOP)	9'-0" OR LESS
	12"	7"	N/A	N/A	11"	8"	12"	10"	12"	6 1/2"	9 1/2"	9 1/2"	N/A	N/A	N/A	N/A	1 (BOTTOM)	
	12"	N/A	N/A	N/A	11"	N/A	12"	N/A	12"	N/A	9 1/2"	N/A	N/A	N/A	N/A	N/A	2 (TOP)	
	12"	7"	N/A	N/A	11"	8"	12"	10"	12"	6 1/2"	9 1/2"	9 1/2"	N/A	N/A	N/A	N/A	2 (BOTTOM)	
	12"	N/A	N/A	N/A	11"	N/A	12"	N/A	12"	N/A	9 1/2"	N/A	N/A	N/A	N/A	N/A	3 (TOP)	
	12"	7"	N/A	N/A	11"	8"	12"	10"	12"	6 1/2"	9 1/2"	9 1/2"	N/A	N/A	N/A	N/A	3 (BOTTOM)	
	12"	N/A	N/A	N/A	11"	N/A	12"	N/A	12"	N/A	9 1/2"	N/A	N/A	N/A	N/A	N/A	4 (TOP)	
	12"	7"	N/A	N/A	11"	8"	12"	10"	12"	6 1/2"	9 1/2"	9 1/2"	N/A	N/A	N/A	N/A	4 (BOTTOM)	
	12"	N/A	N/A	N/A	11"	N/A	12"	N/A	12"	N/A	9 1/2"	N/A	N/A	N/A	N/A	N/A	5 (TOP)	
	12"	5 1/2"	N/A	N/A	9 1/2"	6 1/2"	12"	8"	10"	5"	7 1/2"	7 1/2"	N/A	N/A	N/A	N/A	5 (BOTTOM)	
	9 1/2"	N/A	N/A	N/A	6 1/2"	N/A	10"	N/A	7"	N/A	5"	N/A	N/A	N/A	N/A	N/A	6 (TOP/BOTTOM)	
	8 1/2"	N/A	N/A	N/A	5 1/2"	N/A	8 1/2"	N/A	6"	N/A	4 1/2"	N/A	N/A	N/A	N/A	N/A	7 (TOP/BOTTOM)	
	N/A	N/A	N/A	N/A	N/A	N/A	12"	6"	12"	6"	6"	6"	N/A	N/A	N/A	N/A	8 (TOP/BOTTOM)	
+65.0, -72.0	9"	N/A	12"	N/A	N/A	N/A	9 1/2"	N/A	N/A	N/A	11"	N/A	12"	N/A	10"	N/A	7 (TOP/BOTTOM)	9'-0" OR LESS
	N/A	N/A	N/A	N/A	N/A	N/A	12"	6"	N/A	N/A	12"	6"	12"	6"	N/A	N/A	11 (TOP)	
	12"	7 1/2"	12"	12"	N/A	N/A	12"	10 1/2"	N/A	N/A	12"	10"	12"	8 1/2"	12"	9"	11 (BOTTOM)	
+62.0, -73.3	6"	N/A	N/A	N/A	6"	N/A	6"	N/A	6"	N/A	6"	N/A	N/A	N/A	N/A	N/A	2 (TOP)	9'-0" TO 10'-0"
	6"	6"	N/A	N/A	6"	6"	6"	6"	6"	6"	6"	6"	N/A	N/A	N/A	N/A	2 (BOTTON)	
	6"	N/A	N/A	N/A	6"	N/A	6"	N/A	6"	N/A	5"	N/A	N/A	N/A	N/A	N/A	6 (TOP/BOTTOM)	
	6"	N/A	N/A	N/A	5"	N/A	6"	N/A	5 1/2"	N/A	4"	N/A	N/A	N/A	N/A	N/A	7 (TOP/BOTTOM)	
	N/A	N/A	N/A	N/A	N/A	N/A	6"	6"	6"	6"	6"	6"	N/A	N/A	N/A	N/A	8 (TOP/BOTTOM)	

E. D. = EDGE DISTANCE

Approved as complying with the Florida Building Code
Date 03/21/2002
NOA# 01-0516.06
Miami Dade Product Control Division
By Helmy A. Mallar

* MAXIMUM ANCHOR SPACINGS ARE VALID FOR 3 1/2" EDGE DISTANCE. FOR E. D. LESS THAN 3 1/2", REDUCE ANCHOR SPACING BY MULTIPLYING SPACING SHOWN ON SCHEDULE BY THE FOLLOWING FACTORS. (NOTE: Min. E. D. FOR CALK-IN ANCHORS IS 2 1/2") FOR THIS OPERATION TO BE POSIBLE, REDUCED SPACING OBTAINED USING FACTOR SHALL NOT BE LESS THAN MINIMUM SPACING INDICATED FOR EACH ANCHOR TYPE AT ANCHORS LEGEND.

ACTUAL E. D.	FACTOR		
	REGULAR TAPCON, 410 S.S. TAPCON, CRETE-FLEX SS4, ZAMAC NAILING, PANELMATE OR PANELMATE PLUS.	CALK-IN	CF TAP-GRIP
3"	.86	.75	1.00
2 1/2"	.71	.50	.80
2"	.50	–	–

ANCHORS LEGEND

ANCHOR TYPE	Min. ANCHOR SPACING
REGULAR TAPCON, 410 S.S. TAPCON, CRETE-FLEX SS4, ZAMAC NAILING, CF TAP-GRIP, PANELMATE OR PANELMATE PLUS.	3.0"
CALK-IN	2.5"

MIAMI-DADE COUNTY

TILTECO INC.
TILLIT TESTING & ENGINEERING COMPANY
6585 N.W. 36th. St., Ste. 217, VIRGINIA GARDENS, FL 33166
Phone : (305)871-1530 , Fax : (305)871-1531
EB-0006719
WALTER A. TILLIT Jr. P. E.
FLORIDA Lic. # 44167

2/27/02

0.050" SOLID BERTHA ALUMINUM STORM PANEL

EASTERN METAL SUPPLY, INC
4288 WEST ROADS DRIVE
RIVIERA BEACH, FL 33407

REV. No	DESCRIPTION	DATE	REV. No	DESCRIPTION	DATE
1	OLD 98-172	8/27/01	3	–	–
2	GENERAL	1/18/02	4	–	–

AS SHOWN SCALE

8/27/01 DATE

01-058 DRAWING No

SHEET 11 OF 15

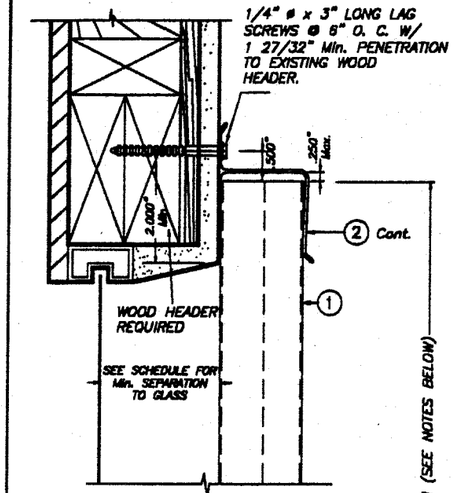

ALTERNATIVE 1

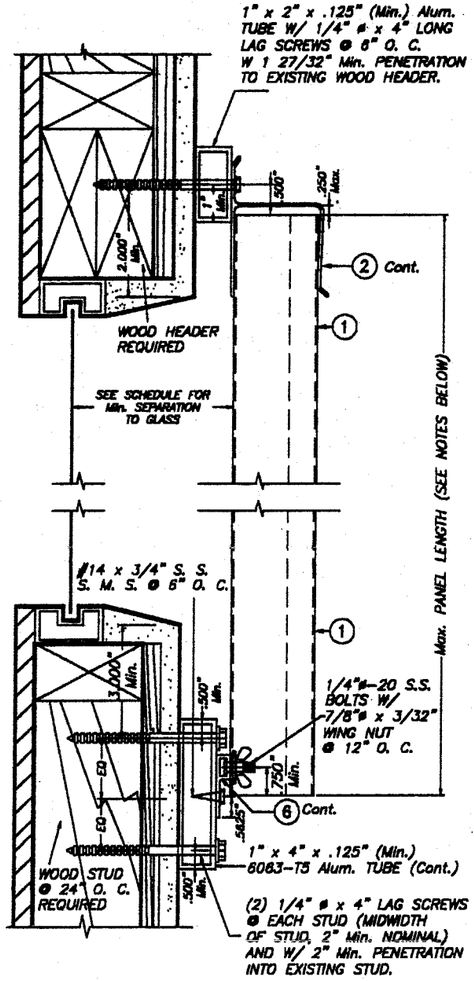

ALTERNATIVE 4

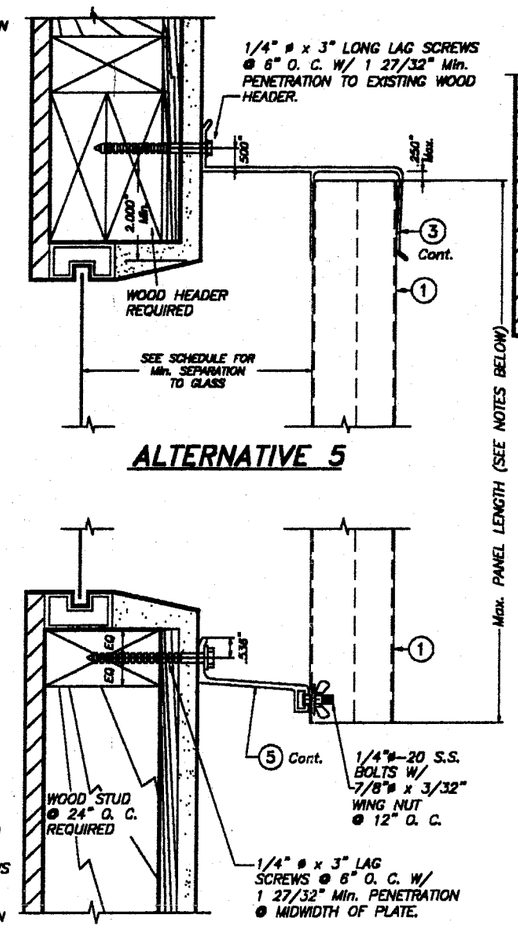

ALTERNATIVE 5

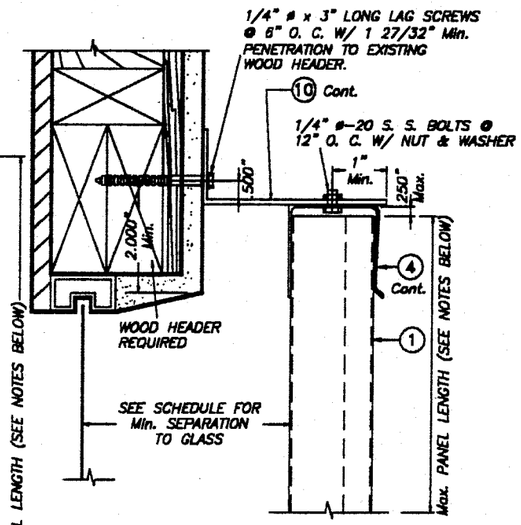

ALTERNATIVE 7

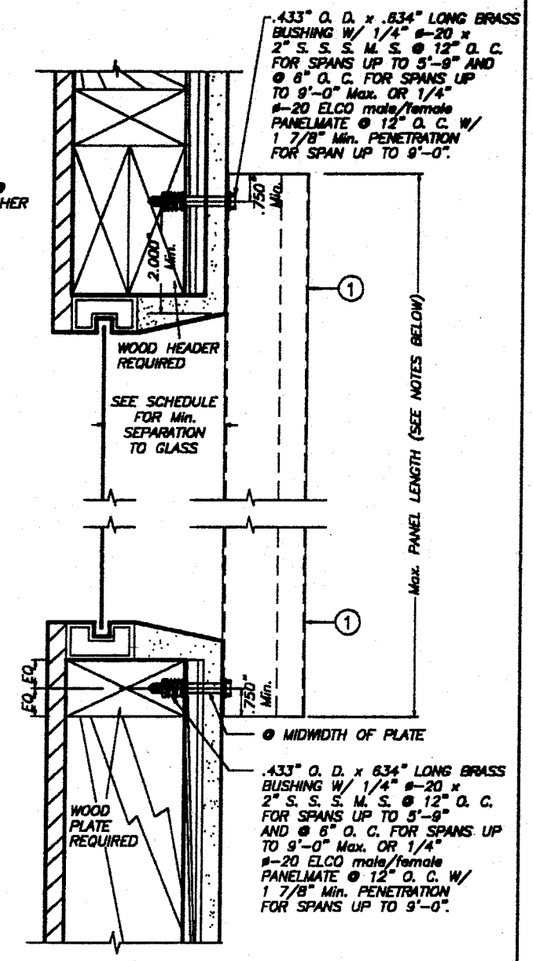

ALTERNATIVE 8

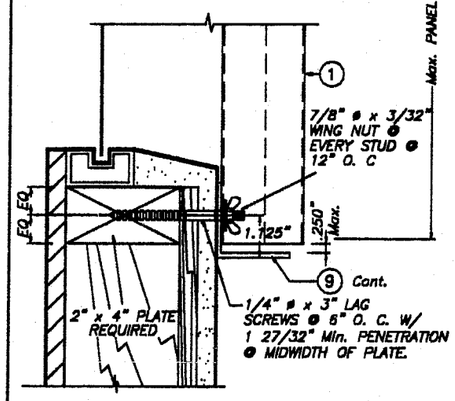

ALTERNATIVE 2

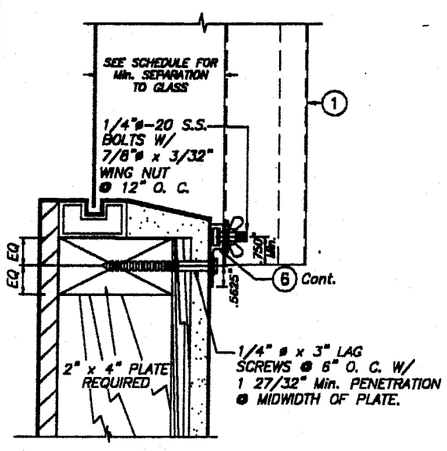

ALTERNATIVE 3

Approved as complying with the Florida Buiding Code
Date 03/21/2002
NOA# 01-0516.06
Miami Dade Product Control Division
By Helmy H. Mahdi

WALL MOUNTING INSTALLATIONS SECTIONS A

SCALE : 1/4" = 1"

NOTE FOR COMBINATION OF SECTIONS:

WALL MOUNTING SECTIONS CAN BE COMBINED IN ANY WAY TO SUIT ANY INSTALLATION.

NOTES:

1. INSTALLATIONS ARE ONLY VALID FOR DESIGN WIND LOADS UP TO +65.0, -72.0 psf AND PANEL'S LENGTHS UP TO 9'-0", EXCEPT AS NOTED.
2. NEW 2" x 6" P. T. TO BE SOUTHERN PINE No. 2, SURFACED DRY WITH 19 % M. M. C. W/ SPECIFIC DENSITY OF 0.55.
3. FOR NEW WOOD FRAME CONSTRUCTION: WOOD MEMBERS TO BE SOUTHERN PINE No. 2, W/ SPECIFIC DENSITY OF 0.55 OR EQUAL.

INSTALLATION DETAILS ON EXISTING WOOD BUILDINGS

MIAMI-DADE COUNTY

TILTECO INC.
TILLIT TESTING & ENGINEERING COMPANY
8395 N.W. 38th. St., Ste. 217, VIRGINIA GARDENS, FL 33166
Phone : (305)871-1530 . Fax : (305)871-1531
EB-0006719
WALTER A. TILLIT Jr. P. E.
FLORIDA Lic. # 44167

0.050" SOLID BERTHA ALUMINUM STORM PANEL

AS SHOWN SCALE

EASTERN METAL SUPPLY, INC
4268 WEST ROADS DRIVE
RIVIERA BEACH, FL 33407

8/27/01 DATE

01-058 DRAWING No

REV. No	DESCRIPTION	DATE	REV. No	DESCRIPTION	DATE
1	OLD 98-172	8/27/01	3	-	-
2	GENERAL	1/18/02	4	-	-

SHEET 12 OF 15

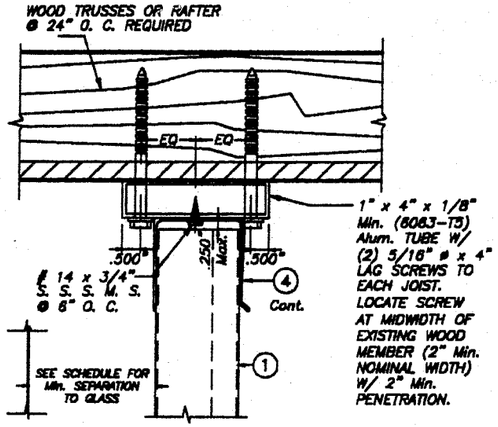

ALTERNATIVE 9A

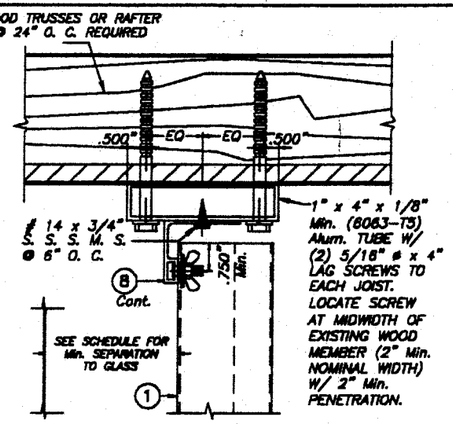

ALTERNATIVE 10

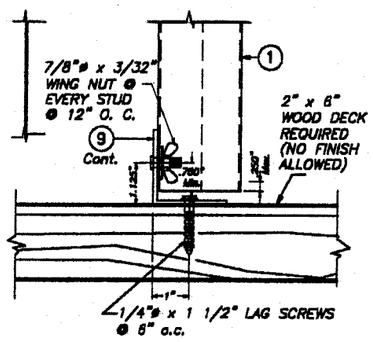

ALTERNATIVE 9

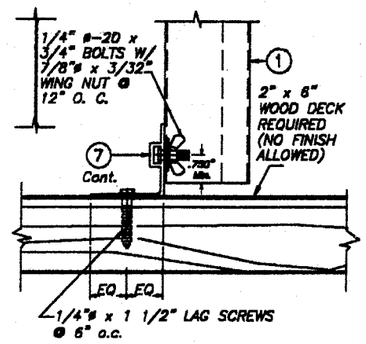

ALTERNATIVE 11

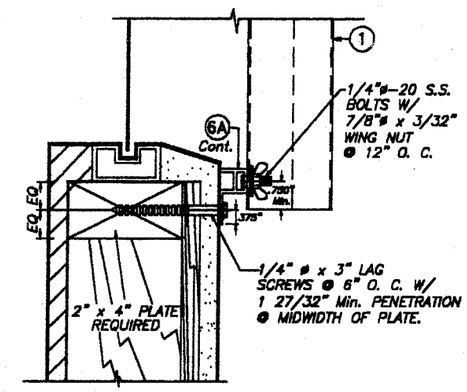

ALTERNATIVE 12 *

* VALID FOR Max. +63.5, −63.5 psf.

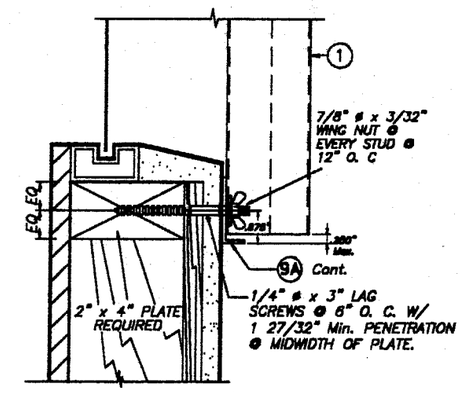

ALTERNATIVE 14

CEILING & FLOOR MOUNTING INSTALLATIONS

SCALE : 1/4" = 1"

WALL MOUNTING INSTALLATION

SCALE : 1/4" = 1"

NOTE FOR COMBINATION OF SECTIONS:

WALL/FLOOR/CEILING MOUNTING SECTIONS CAN BE COMBINED IN ANY WAY TO SUIT ANY INSTALLATION.

INSTALLATION DETAILS ON EXISTING WOOD BUILDINGS

Approved as complying with the Florida Building Code
Date 03/21/2002
NOA# 01-0516.06
Miami Dade Product Control Division
By

NOTES:

1. INSTALLATIONS ARE ONLY VALID FOR DESIGN WIND LOADS UP TO +65.0, −72.0 psf AND PANEL'S LENGTHS UP TO 9'−0", EXCEPT AS NOTED.
2. NEW 2" x 6" P. T. TO BE SOUTHERN PINE No. 2, SURFACED DRY WITH 19 % M. M. C. W/ SPECIFIC DENSITY OF 0.55.
3. FOR NEW WOOD FRAME CONSTRUCTION: WOOD MEMBERS TO BE SOUTHERN PINE No. 2, W/ SPECIFIC DENSITY OF 0.55 OR EQUAL.

MIAMI−DADE COUNTY

TILTECO INC.
TILLIT TESTING & ENGINEERING COMPANY
6585 N.W. 36th. St., Ste. 217, VIRGINIA GARDENS, FL 33166
Phone : (305)871-1530 , Fax : (305)871-1531
EB-0006719
WALTER A. TILLIT Jr. P. E.
FLORIDA Lic. # 44167

0.050" SOLID BERTHA ALUMINUM STORM PANEL

AS SHOWN SCALE

EASTERN METAL SUPPLY, INC
4268 WEST ROADS DRIVE
RIVIERA BEACH, FL 33407

8/27/01 DATE

01−058 DRAWING No

REV. No	DESCRIPTION	DATE	REV. No	DESCRIPTION	DATE
1	OLD 98-172	8/27/01	3	–	–
2	GENERAL	1/18/02	4	–	–

SHEET 13 OF 15

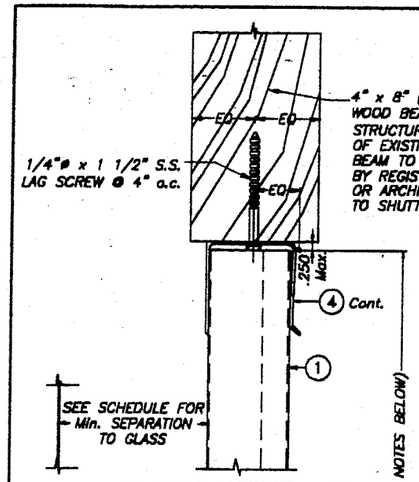

ALTERNATIVE 15

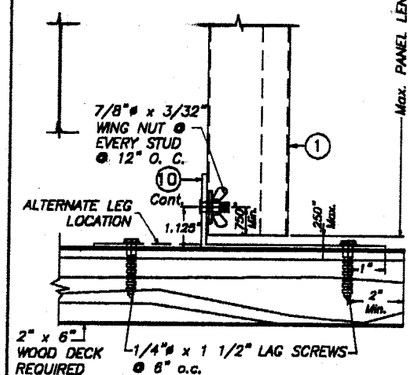

ALTERNATIVE 16 *

CEILING & FLOOR MOUNTING INSTALLATIONS

SCALE : 1/4" = 1"

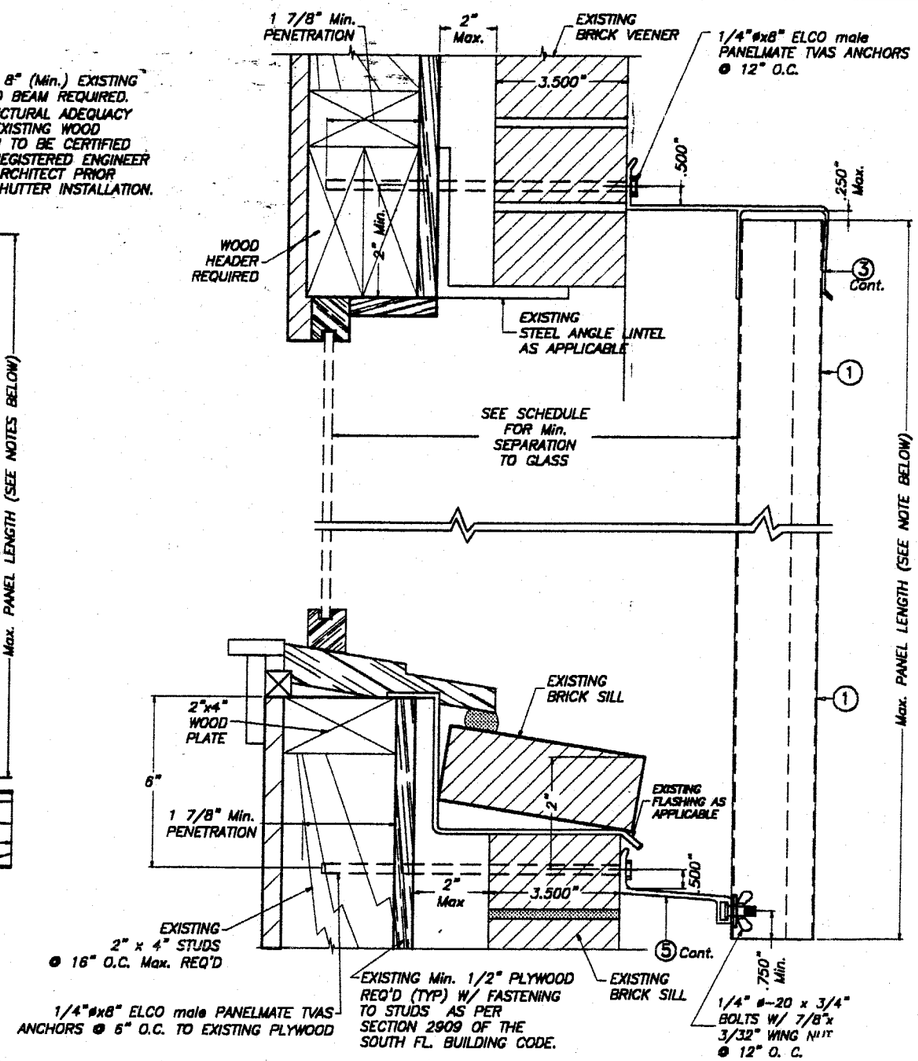

ALTERNATIVE 17 *

* VALID FOR Max. +63.5, −63.5 psf.

BUILD-OUT INSTALLATION

SCALE : 1/4" = 1"

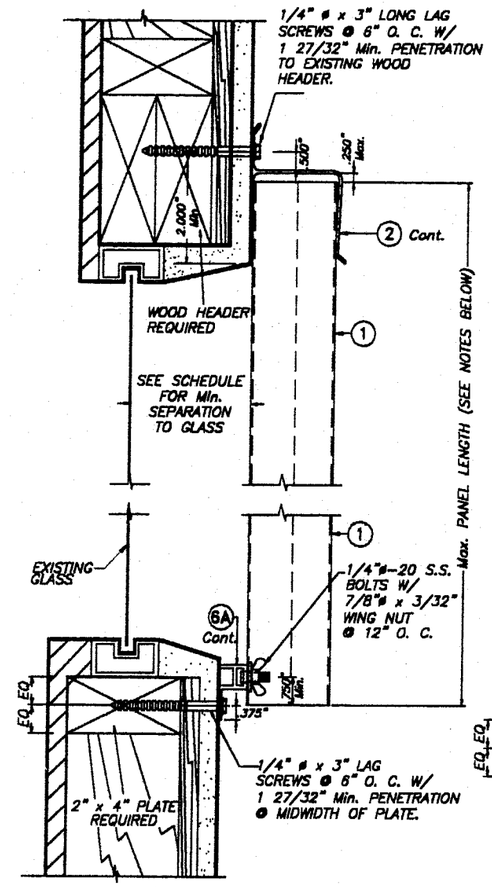

ALTERNATIVE 18A *

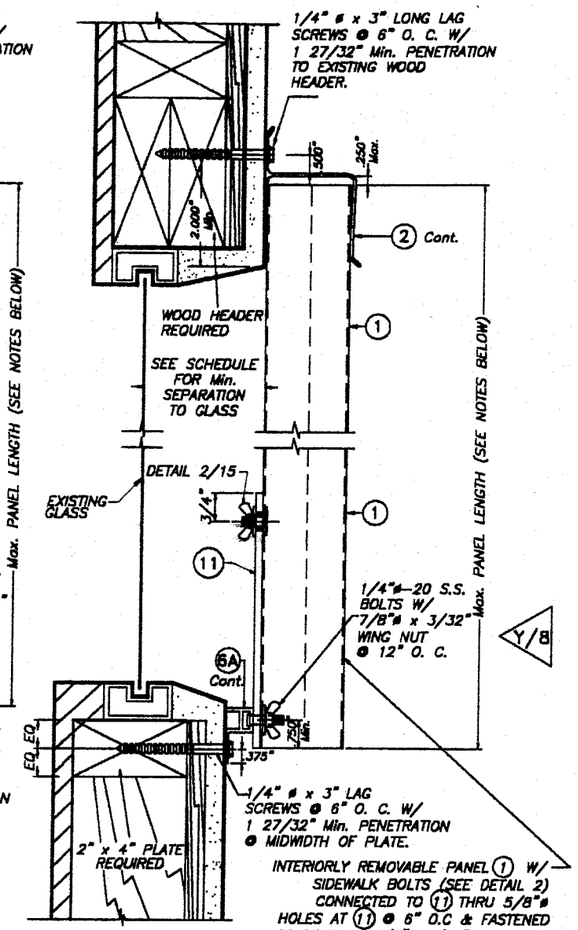

ALTERNATIVE 18B *

WALL MOUNTING INSTALLATIONS SECTIONS 18

SCALE : 1/4" = 1"

* VALID FOR Max. +63.5, −63.5 psf.

INSTALLATIONS VALID FOR PANELS 1 USED JOINTLY WITH INTERIORLY REMOVABLE PANELS 1

NOTE FOR COMBINATION OF SECTIONS:

WALL/FLOOR/CEILING MOUNTING SECTIONS CAN BE COMBINED IN ANY WAY TO SUIT ANY INSTALLATION.

INSTALLATION DETAILS ON EXISTING WOOD BUILDINGS

Approved as complying with the Florida Building Code
Date 03/21/2002
NOA# 01-0516.06
Miami Dade Product Control Division
By Helmy H. Mahdi

MIAMI-DADE COUNTY

NOTES:

1. INSTALLATIONS ARE ONLY VALID FOR DESIGN WIND LOADS UP TO +65.0, −65.0 psf AND PANEL'S LENGTHS UP TO 9'-0", EXCEPT AS NOTED.
2. NEW 2" x 6" P. T. TO BE SOUTHERN PINE No. 2, SURFACED DRY WITH 19 % M. M. C. W/ SPECIFIC DENSITY OF 0.55.
3. FOR NEW WOOD FRAME CONSTRUCTION: WOOD MEMBERS TO BE SOUTHERN PINE No. 2, W/ SPECIFIC DENSITY OF 0.55 OR EQUAL.

8/23/02

TILTECO INC.
TILLIT TESTING & ENGINEERING COMPANY
6595 N.W. 36th. St., Ste. 217, VIRGINIA GARDENS, FL 33166
Phone : (305)871-1630 . Fax : (305)871-1531
EB-0006719
WALTER A. TILLIT Jr. P. E.
FLORIDA Lic. # 44167

0.050" SOLID BERTHA ALUMINUM STORM PANEL

AS SHOWN SCALE

EASTERN METAL SUPPLY, INC
4268 WEST ROADS DRIVE
RIVIERA BEACH, FL 33407

8/27/01 DATE

01-058 DRAWING No

REV. No	DESCRIPTION	DATE	REV. No	DESCRIPTION	DATE
1	OLD 98-172	8/27/01	3	–	–
2	GENERAL	1/18/02	4	–	–

SHEET 14 OF 15

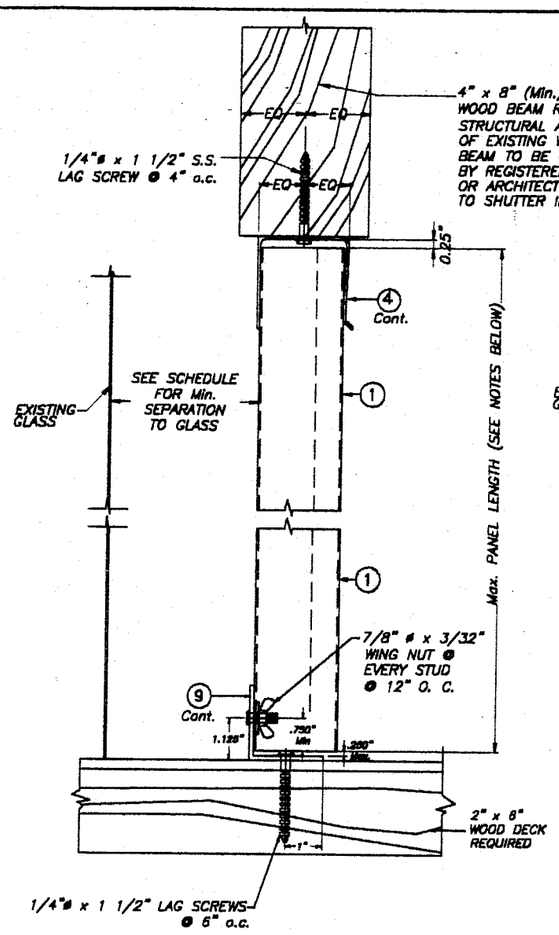

ALTERNATIVE 19A

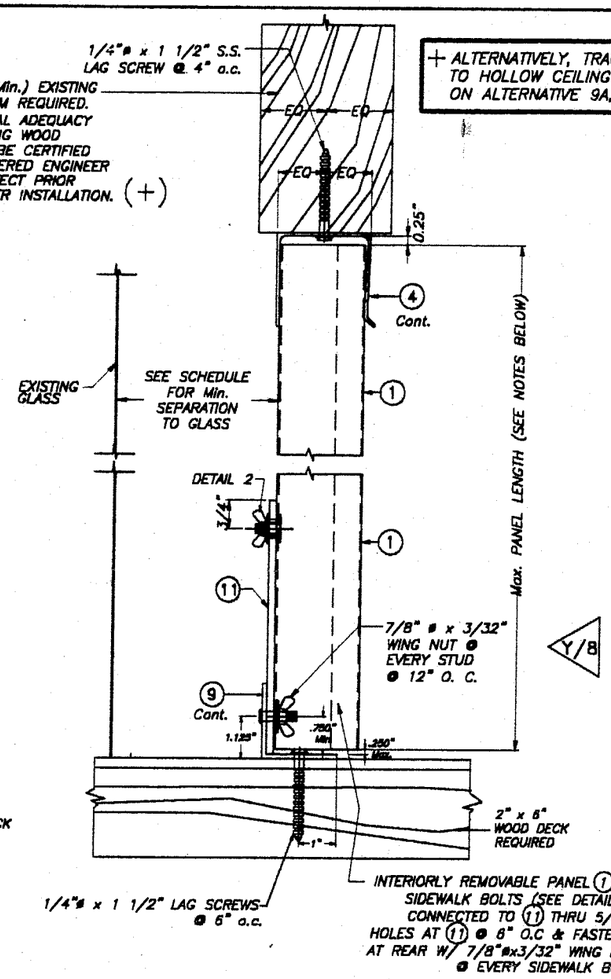

ALTERNATIVE 19B

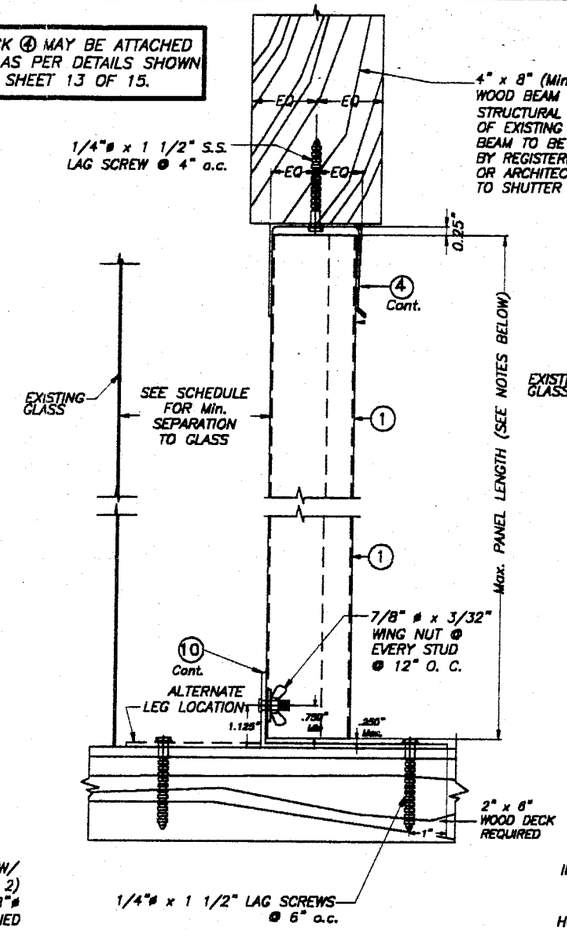

ALTERNATIVE 20A

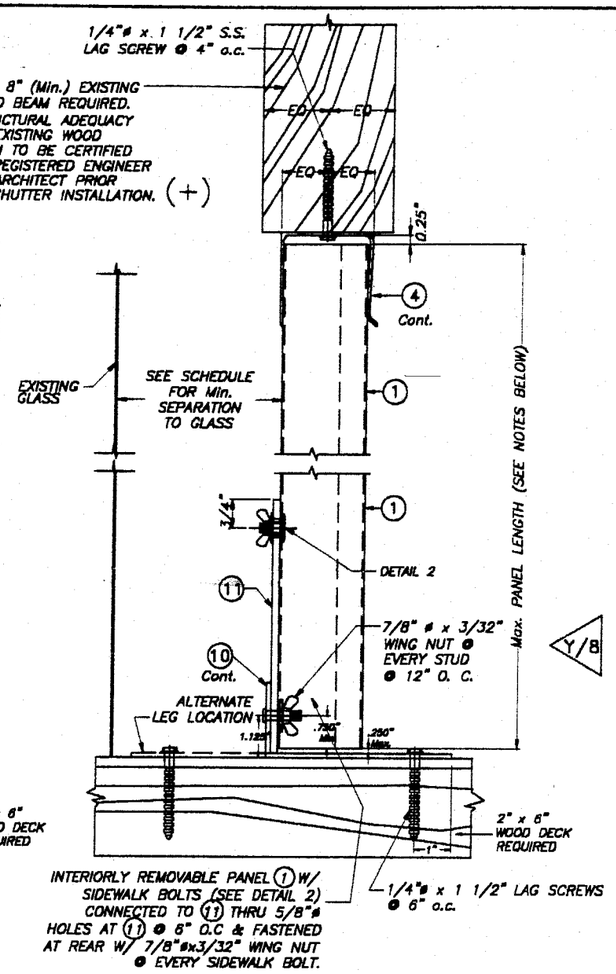

ALTERNATIVE 20B

CEILING & FLOOR MOUNTING INSTALLATIONS SECTIONS 19

SCALE : 1/4" = 1"

CEILING & FLOOR MOUNTING INSTALLATIONS SECTIONS 20

SCALE : 1/4" = 1"

Approved as complying with the Florida Building Code
Date 03/21/2002
NOA# 01-0516.06
Miami Dade Product Control Division
By Helmy A. Abdelsalam

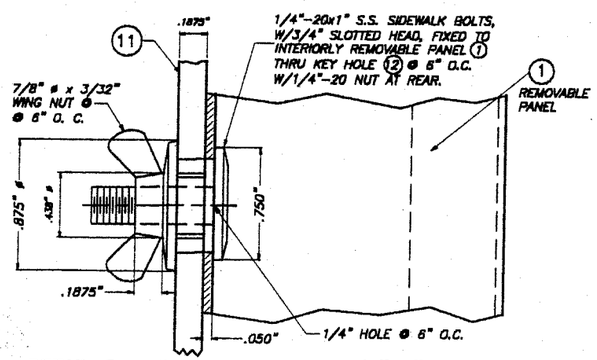

DETAIL 2 – INSTALLATION OF 1/4"x1" SIDEWALK BOLTS @ REMOVABLE PANEL

SCALE: 1" = 1"

NOTE FOR COMBINATION OF SECTIONS:

FLOOR/CEILING MOUNTING SECTIONS CAN BE COMBINED IN ANY WAY TO SUIT ANY INSTALLATION.

NOTES:

1. INSTALLATIONS ARE ONLY VALID FOR DESIGN WIND LOADS UP TO +65.0, −65.0 psf AND PANEL'S LENGTHS UP TO 9'−0".
2. NEW 2" x 6" P. T. TO BE SOUTHERN PINE No. 2, SURFACED DRY WITH 19 % M. M. C. W/ SPECIFIC DENSITY OF 0.55.
3. FOR NEW WOOD FRAME CONSTRUCTION: WOOD MEMBERS TO BE SOUTHERN PINE No. 2, W/ SPECIFIC DENSITY OF 0.55 OR EQUAL.

INSTALLATION DETAILS ON EXISTING WOOD BUILDINGS

MIAMI–DADE COUNTY

TILTECO INC.
TILLIT TESTING & ENGINEERING COMPANY
8585 N.W. 38th. St., Ste. 217, VIRGINIA GARDENS, FL 33166
Phone : (305)871-1530 . Fax : (305)871-1531
EB-0006719
WALTER A. TILLIT Jr. P. E.
FLORIDA Lic. # 44167

0.050" SOLID BERTHA ALUMINUM STORM PANEL

EASTERN METAL SUPPLY, INC
4268 WEST ROADS DRIVE
RIVIERA BEACH, FL 33407

REV. No	DESCRIPTION	DATE	REV. No	DESCRIPTION	DATE
1	OLD 98-172	8/27/01	3	–	–
2	GENERAL	1/18/02	4	–	–

AS SHOWN SCALE

8/27/01 DATE

01-058 DRAWING No

SHEET 15 OF 15