MIAMI-DADE COUNTY, FLORIDA
METRO-DADE FLAGLER BUILDING

BUILDING CODE COMPLIANCE OFFICE
METRO-DADE FLAGLER BUILDING
140 WEST FLAGLER STREET, SUITE 1603
MIAMI, FLORIDA 33130-1563
(305) 375-2901 FAX (305) 375-2908

CONTRACTOR LICENSING SECTION
(305) 375-2527 FAX (305) 375-2558

CONTRACTOR ENFORCEMENT DIVISION
(305) 375-2966 FAX (305) 375-2908

PRODUCT CONTROL DIVISION
(305) 375-2902 FAX (305) 372-6339

PRODUCT CONTROL NOTICE OF ACCEPTANCE

PGT Industries
1070 Technology Drive
Nokomis ,FL 34275

Your application for Notice of Acceptance (NOA) of:
SH-4000 Aluminum Single Hung Window Standard Top w/Heavy Duty Meeting Rail
under Chapter 8 of the Code of Miami-Dade County governing the use of Alternate Materials and Types of Construction, and completely described herein, has been recommended for acceptance by the Miami-Dade County Building Code Compliance Office (BCCO) under the conditions specified herein.

This NOA shall not be valid after the expiration date stated below. BCCO reserves the right to secure this product or material at any time from a jobsite or manufacturer's plant for quality control testing. If this product or material fails to perform in the approved manner, BCCO may revoke, modify, or suspend the use of such product or material immediately. BCCO reserves the right to revoke this approval, if it is determined by BCCO that this product or material fails to meet the requirements of the South Florida Building Code.

The expense of such testing will be incurred by the manufacturer.

ACCEPTANCE NO.: 01-0516.11
EXPIRES: 10/04/2006

Raul Rodriguez
Chief Product Control Division

THIS IS THE COVERSHEET, SEE ADDITIONAL PAGES FOR SPECIFIC AND GENERAL CONDITIONS
BUILDING CODE & PRODUCT REVIEW COMMITTEE

This application for Product Approval has been reviewed by the BCCO and approved by the Building Code and Product Review Committee to be used in Miami-Dade County, Florida under the conditions set forth above.

Francisco J. Quintana, R.A.
Director
Miami-Dade County
Building Code Compliance Office

APPROVED: 10/04/2001

PGT Industries

ACCEPTANCE No.: 01-0516.11

APPROVED : October 04, 2001

EXPIRES : October 04, 2006

NOTICE OF ACCEPTANCE: SPECIFIC CONDITIONS

1. SCOPE

1.1 This approves an aluminum single hung window, as described in Section 2 of this Notice of Acceptance, designed to comply with the South Florida Building Code (SFBC), 1994 Edition for Miami-Dade County, for the locations where the pressure requirements, as determined by SFBC Chapter 23, do not exceed the Design Pressure Rating values indicated in the approved drawings.

2. PRODUCT DESCRIPTION

2.1 The **Series "SH-4000" Aluminum Single Hung Window** (w/HD meeting rail) and its components shall be constructed in strict compliance with the following documents: Drawing No **2737**, titled "Aluminum Single Hung Window (TG-B)" Sheets 1 through 4 of 4 dated 04/18/01 and revised on 09-06-2001 and 10-05-2001, signed and sealed by Robert L. Clark, P.E., bearing the Miami-Dade County Product Control approval stamp with the Notice of Acceptance number and approval date by the Miami-Dade County Product Control Division. These documents shall hereinafter be referred to as the approved drawings.

3. LIMITATIONS

3.1 This approval applies to single unit applications only, as shown in approved drawings.

4. INSTALLATION

4.1 The aluminum single hung window and its components shall be installed in strict compliance with the approved drawings.

4.2 Hurricane protection system (shutters): the installation of this unit **will require** a hurricane protection system.

5. LABELING

5.1 Each unit shall bear a permanent label with the manufacturer's name or logo, city, state and following statement: "Miami-Dade County Product Control Approved".

6. BUILDING PERMIT REQUIREMENTS

6.1 Application for building permit shall be accompanied by copies of the following:

6.1.1 This Notice of Acceptance

6.1.2 Duplicate copies of the approved drawings, as identified in Section 2 of this Notice of Acceptance, clearly marked to show the components selected for the proposed installation.

6.1.3 Any other documents required by the Building Official or the South Florida Building Code (SFBC) in order to properly evaluate the installation of this system.

Ishaq I. Chanda

Ishaq I. Chanda, P.E. Product Control Examiner
Product Control Division

PGT Industries

ACCEPTANCE No.: 01-0516.11

APPROVED : October 04, 2001

EXPIRES : October 04, 2006

NOTICE OF ACCEPTANCE: STANDARD CONDITIONS

1. Renewal of this Acceptance (approval) shall be considered after a renewal application has been filed and the original submitted documentation, including test supporting data, engineering documents, are no older than eight (8) years.

2. Any and all approved products shall be permanently labeled with the manufacturer's name, city, state, and the following statement: "Miami-Dade County Product Control Approved", or as specifically stated in the specific conditions of this Acceptance.

3. Renewals of Acceptance will not be considered if:
   a) There has been a change in the South Florida Building Code affecting the evaluation of this product and the product is not in compliance with the code changes;
   b) The product is no longer the same product (identical) as the one originally approved;
   c) If the Acceptance holder has not complied with all the requirements of this acceptance, including the correct installation of the product;
   d) The engineer who originally prepared, signed and sealed the required documentation initially submitted is no longer practicing the engineering profession.

4. Any revision or change in the materials, use, and/or manufacture of the product or process shall automatically be cause for termination of this Acceptance, unless prior written approval has been requested (through the filing of a revision application with appropriate fee) and granted by this office.

5. Any of the following shall also be grounds for removal of this Acceptance:
   a) Unsatisfactory performance of this product or process.
   b) Misuse of this Acceptance as an endorsement of any product, for sales, advertising or any other purpose.

6. The Notice of Acceptance number preceded by the words Miami-Dade County, Florida, and followed by the expiration date may be displayed in advertising literature. If any portion of the Notice of Acceptance is displayed, then it shall be done in its entirety.

7. A copy of this Acceptance as well as approved drawings and other documents, where it applies, shall be provided to the user by the manufacturer or its distributors and shall be available for inspection at the job site at all time. The engineer need not reseal the copies.

8. Failure to comply with any section of this Acceptance shall be cause for termination and removal of Acceptance.

9. This Notice of Acceptance consists of pages 1, 2 and this last page 3.

Ishaq I. Chanda

Ishaq I. Chanda, P.E. Product Control Examiner
Product Control Division

END OF THIS ACCEPTANCE

PGT Industries

ACCEPTANCE No.: 01-0516.11

APPROVED : October 04, 2001

EXPIRES : October 04, 2006

NOTICE OF ACCEPTANCE: EVIDENCE SUBMITTED
(For File ONLY. Not part of NOA.)

A. DRAWINGS

1. Manufacturer's die drawings and sections.
2. Drawing No **2737**, titled "Aluminum Single Hung Window (TG-B)" Sheets 1 through 4 of 4 dated 04/18/01 and revised on 09-06-2001 and 10-05-2001, signed and sealed by Robert L. Clark, P.E.

(Note: Corrected revised sheet 3 of 4 of the Dwg 2737, w/deletion of reference to integral fin, replaced)

B. TESTS

1. Test reports on 1) Air Infiltration Test, per PA 202-94
   2) Uniform Static Air Pressure Test, Loading per PA 202-94
   3) Water Resistance Test, per PA 202-94
   4) Forced Entry Test, per SFBC 3603.2 (b) and PA 202-94

   along with marked-up drawings and installation diagram of aluminum single hung windows, prepared by Fenestration Testing Laboratory, Inc., Test Report No. **FTL-2957** and 2958 dated various, signed and sealed by Antonio Acevedo, P.E.

C. CALCULATIONS

1. Anchor Calculations dated 5/2/2000, last revised on 08-09-2001, prepared, signed and sealed by Robert L. Clark, P.E.

D. MATERIAL CERTIFICATIONS

1. None.

E. STATEMENTS

1. Statement letter of conformance, dated May 11, 2001, signed by Robert L. Clark, P.E.
2. Statement letter of no financial interest, dated May 11, 2001, signed by Robert L. Clark, P.E.
3. Laboratory compliance statement as part of test reports for Test Report no. **FTL-**2957, and 2958, issued by Fenestration Testing Laboratory, Inc., signed and sealed by signed and sealed by Antonio Acevedo, P.E.
4. "Expedite" file review request dated July 23, 2001, by PGT, signed by by Robert L. Clark, P.E.

F. OTHER

1. Test proposal dated 09-12-2000 by PGT and proposal approval dated 10-05-2000 by BCCO.
2. This NOA 01-0516.11 replaces NOA 98-0218.01 and 98-0218.02.

Ishaq I. Chanda

Ishaq I. Chanda, P.E. Product Control Examiner
Product Control Division

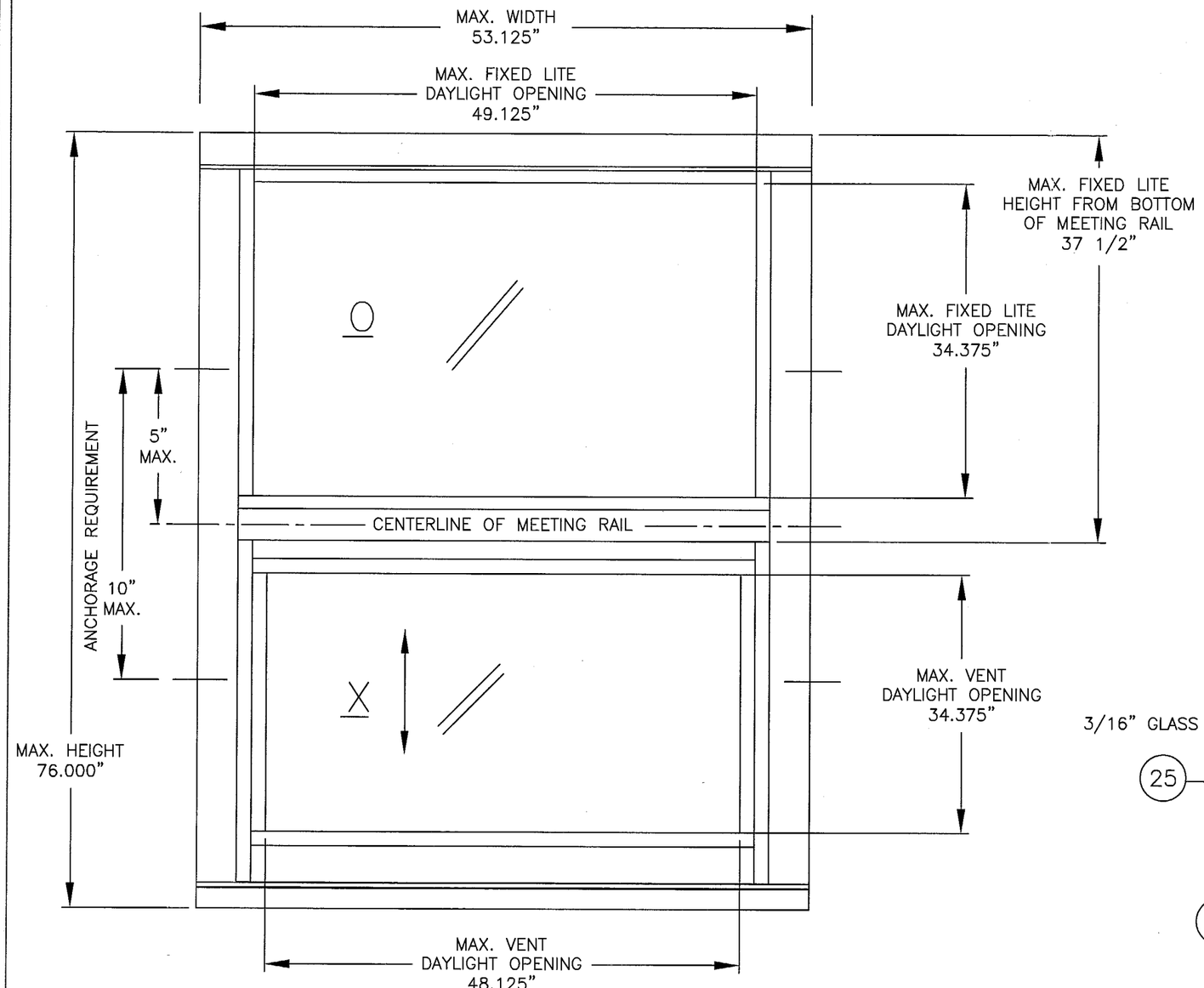

COMPARATIVE ANALYSIS FOR: GLASS: 3/16 TEMPERED — FTL- 2957 (A1,A3,A4)

Window Width	Window Height 26.000 (4) neg	26.000 (4) pos	38.375 (4) neg	38.375 (4) pos	50.625 (4) neg	50.625 (4) pos	63.000 (6) neg	63.000 (6) pos	76.000 (6) neg	76.000 (6) pos
19.125 (2)	-135.00	56.70	-135.00	56.70	-135.00	56.70	-130.10	56.70	-100.40	56.70
24.000 (2)	-135.00	56.70	-135.00	56.70	-135.00	56.70	-116.60	56.70	-87.50	56.70
26.500 (2)	-135.00	56.70	-135.00	56.70	-135.00	56.70	-112.90	56.70	-83.20	56.70
32.000 (3)	-135.00	56.70	-135.00	56.70	-135.00	56.70	-110.00	56.70	-77.50	56.70
37.000 (3)	-135.00	56.70	-135.00	56.70	-135.00	56.70	-110.00	56.70	-75.70	56.70
40.000 (3)	-135.00	56.70	-135.00	56.70	-135.00	56.70	-110.00	56.70	-75.60	56.70
44.000 (3)	-135.00	56.70	-135.00	56.70	-123.60	56.70	-110.00	56.70	-75.60	56.70
48.000 (3)	-135.00	56.70	-133.00	56.70	-109.60	56.70	-96.50	56.70	-75.60	56.70
53.125 (4)	-135.00	56.70	-117.40	56.70	-95.70	56.70	-83.30	56.70	-75.60	56.70

COMPARATIVE ANALYSIS FOR: GLASS: 3/16 ANNEALED — FTL- 2958

Window Width	Window Height 26.000 (4) neg	26.000 (4) pos	38.375 (4) neg	38.375 (4) pos	50.625 (4) neg	50.625 (4) pos	63.000 (6) neg	63.000 (6) pos	76.000 (6) neg	76.000 (6) pos
19.125 (2)	-120.00	56.67	-120.00	56.67	-120.00	56.67	-111.90	56.67	-86.30	56.67
24.000 (2)	-120.00	56.67	-120.00	56.67	-120.00	56.67	-100.30	56.67	-75.20	56.67
26.500 (2)	-120.00	56.67	-120.00	56.67	-120.00	56.67	-97.00	56.67	-71.60	56.67
32.000 (3)	-120.00	56.67	-120.00	56.67	-101.70	56.67	-81.90	56.67	-66.70	56.67
37.000 (3)	-120.00	56.67	-120.00	56.67	-86.40	56.67	-70.90	56.67	-61.90	56.67
40.000 (3)	-120.00	56.67	-118.60	56.67	-80.90	56.67	-65.80	56.67	-57.70	56.67
44.000 (3)	-120.00	56.67	-110.50	56.67	-73.10	56.67	-59.20	56.67	-52.30	52.30
48.000 (3)	-120.00	56.67	-104.40	56.67	-64.80	56.67	-53.90	53.90	-48.00	48.00
53.125 (4)	-120.00	56.67	-99.70	56.67	-59.50	56.67	-47.90	47.90	-43.10	43.10

COMPARATIVE ANALYSIS NOTES:

1.) Numbers in ( ) parentheses are quantity of anchors per side.
2.) Negative Design Loads based on Comparative Analysis and Glass Table ASTM E1300.
3.) Positive Design Loads based on Comparative Analysis and Water Test Pressure.
4.) Numbers are for #10 screws or 3/16" Tapcons. (#12 screws may be used instead of #10's)
5.) Anchors 5" max. from each corner and 5" max. on either side of meeting rail.
Max. anchor spacing of 16" at jambs and 20" at head and sill.

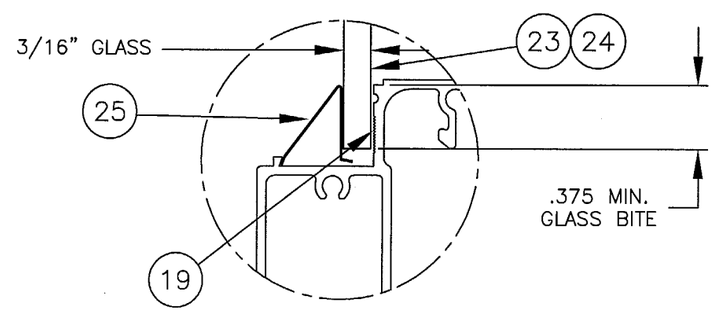

3/16 GLAZING DETAIL

APPROVED AS COMPLYING WITH THE SOUTH FLORIDA BUILDING CODE
DATE OCTOBER 04, 2001
BY Ishaq I. Chanda
PRODUCT CONTROL DIVISION
BUILDING CODE COMPLIANCE OFFICE
ACCEPTANCE NO. 01-0516.11

NON-IMPACT WINDOWS

1.) TEST REPORT, GLAZING, MAXIMUM SIZE
A) FTL-2957, 3/16" TEMPERED, 53.125 x 76.000 (A1, A3, A4)
B) FTL-2958, 3/16" ANNEALED, 53.125 x 76.000
2.) MANUFACTURED WITH HEAVY DUTY MEETING RAIL
3.) SHUTTERS ARE REQUIRED AT ALL INSTALLATIONS
4.) SEE SHEET 2 OF 7 FOR SECTION DETAILS

9/6/01
Robert L. Clark, P.E.
PE #39712
Structural

PGT INDUSTRIES

	Revsd By: F.K.	Date: 9/6/01	Revisions: REDRAWN
Drawn By: F.K.	Date: 4/18/01		
Description: FLANGED W/ 3/16T OR 3/16A GLASS			
Title: ALUMINUM SINGLE HUNG WINDOW (TG-B)			

1070 TECHNOLOGY DRIVE
NOKOMIS, FL 34275
P.O. BOX 1529
NOKOMIS, FL 34274

Series/Model:	Scale:	Sheet:	Drawing No.	Rev:
SH-4000	NTS	1 of 4	2737	A

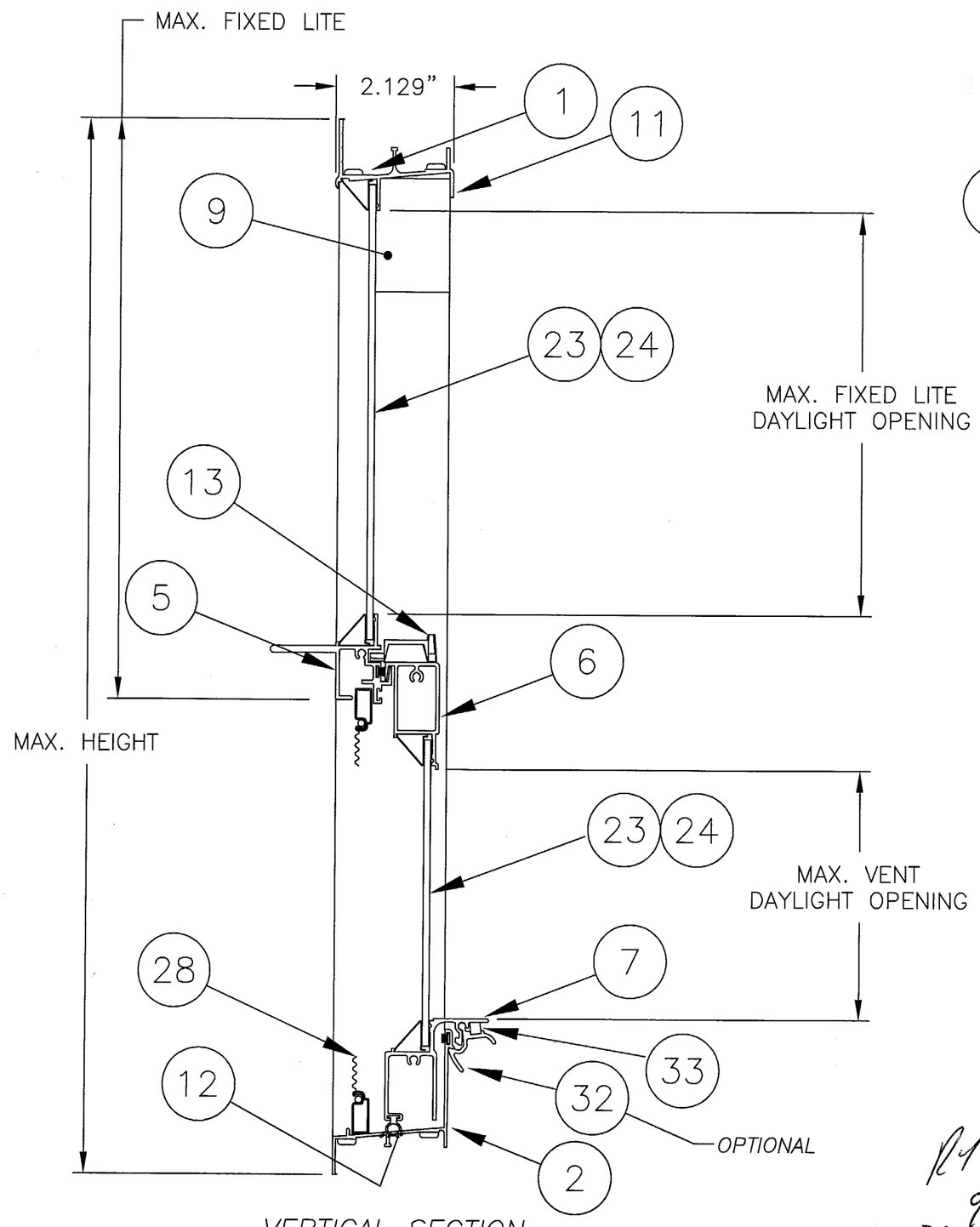

VERTICAL SECTION

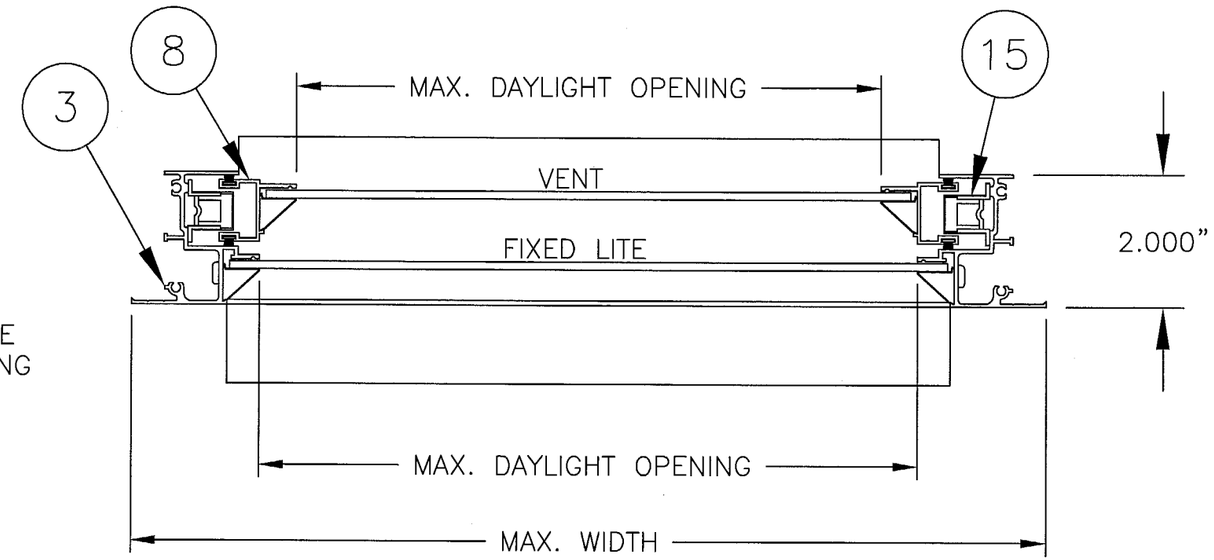

HORIZONTAL SECTION

NON–IMPACT WINDOWS

1.) TEST REPORT, GLAZING, MAXIMUM SIZE
   A) FTL–2957, 3/16" TEMPERED, 53.125 x 76.000 (A1, A3, A4)
   B) FTL–2958, 3/16" ANNEALED, 53.125 x 76.000
2.) MANUFACTURED WITH HEAVY DUTY MEETING RAIL
3.) SHUTTERS ARE REQUIRED AT ALL INSTALLATIONS

APPROVED AS COMPLYING WITH THE
SOUTH FLORIDA BUILDING CODE
DATE OCT 04, 2001
BY Ishaq I. Chanda
PRODUCT CONTROL DIVISION
BUILDING CODE COMPLIANCE OFFICE
ACCEPTANCE NO. 01-0516.11

9/6/01
Robert L. Clark, P.E.
PE #39712
Structural

PGT INDUSTRIES

	Revsd By: F.K.	Date: 9/6/01	Revisions: REDRAWN
Drawn By: F.K.	Date: 4/18/01		
Description: SECTIONS FROM SHEET 1, 3/16 GLASS			
Title: ALUMINUM SINGLE HUNG WINDOW (TG–B)			

1070 TECHNOLOGY DRIVE NOKOMIS, FL 34275	P.O. BOX 1529 NOKOMIS, FL 34274	Series/Model: SH–4000	Scale: NTS	Sheet: 2 of 4	Drawing No. 2737	Rev: A

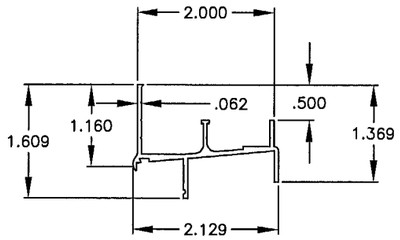

1 HEAD EXTRUSION

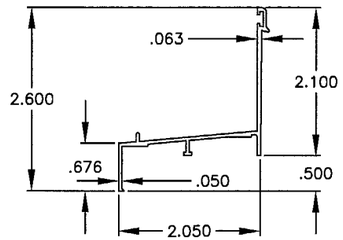

2 SILL EXTRUSION

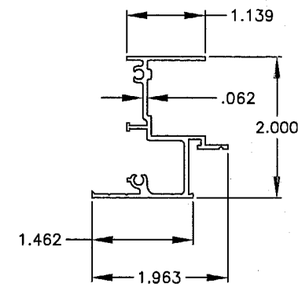

3 JAMB EXTRUSION

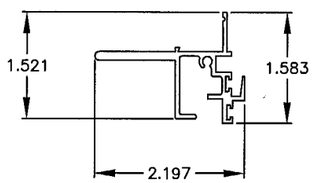

5 HEAVY DUTY MEETING RAIL

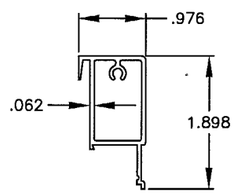

6 SASH TOP RAIL EXTRUSION

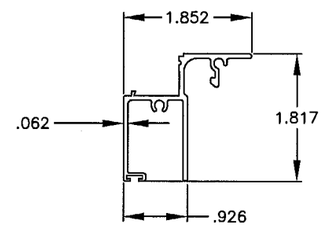

7 SASH BOTTOM RAIL EXTRUSION

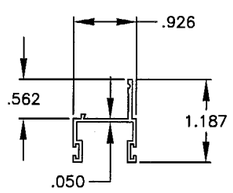

8 SASH SIDE RAIL EXTRUSION

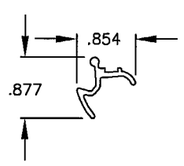

32 SASH RAIL BOTTOM LOCK

ITEM	DESCRIPTION	PGT #	VENDOR	VENDOR #
1	FLANGED FRAME HEAD	62703	6063–T6	
2	FLANGED FRAME SILL	62704	6063–T6	
3	FLANGED FRAME JAMB	62705	6063–T6	
5	HEAVY DUTY FIXED MEETING RAIL	6534525	6063–T6	534525
6	SASH TOP RAIL	6534522	6063–T6	534522
7	SASH BOTTOM RAIL	6534523	6063–T6	534523
8	SASH SIDE RAIL	6534524	6063–T6	534524
9	SASH STOP	66387	6063–T6	AF–6387
10	SASH CAM INSERT (L.H. & R.H.)	42800	PGT	
11	#8 x .750 QUAD PAN HEAD SMS	7834PA	SPENCER OR =	
12	WEATHERSTRIP, VINYL BULB W/LEAF	6TP249	TEAM PLASTICS	TP–249
13	SWEEP LATCH	71096	MINIATURE DIE CASTING	PGT.214.XX
14	#8 x .625 PHILLIPS FLAT HEAD SMS	7858	SPENCER OR =	
15	BALANCE		CALDWELL	
16	WEATHERSTRIP, .187 x .270 FIN	61062	TEAM PLASTICS	FS7826–187
17	WEATHERSTRIP, .187 x .200, FIN	67919	SCHLEGEL	FS7919–187
18	BALANCE TAKE–OUT CLIP	7121UM	CALDWELL	
19	SILICON GLAZING SEALANT	62899	DOW, GE OR EQUAL	
20	SSB 3/32" ANNEALED GLASS			
21	DSB 1/8" ANNEALED GLASS			
22	SSB & DSB GLAZING BEAD	65200	FLORIDA SCREEN OR =	05–200
23	3/16" ANNEALED GLASS			
24	3/16" TEMPERED GLASS			
25	3/16" GLAZING BEAD	65196	FLORIDA SCREEN OR =	05–196
26	#8 x 1.000 QUAD PAN HEAD SMS	781PQ	SPENCER OR =	
27	1" x 1.5" OPEN CELL FOAM PAD			
28	SCREEN ASSEMBLY			
32	SASH BOTTOM RAIL LOCK	62721	6063–T6	
33	SASH BOTTOM RAIL LOCK SPRING	62721	S. STL	

APPROVED AS COMPLYING WITH THE
SOUTH FLORIDA BUILDING CODE
DATE OCT 04, 2001
BY Ishaq I. Chanda
PRODUCT CONTROL DIVISION
BUILDING CODE COMPLIANCE OFFICE
ACCEPTANCE NO. 01-0516.11

REFERENCE TEST REPORTS: FTL–2957, FTL–2958

10/5/01
ROBERT CLARK
#32712

PGT INDUSTRIES

	Revsd By: F.K.	Date: 10/5/01	Revisions: RENUMBERED
Drawn By: F.K.	Date: 4/18/01		
Description: PROFILES & PARTS			
Title: ALUMINUM SINGLE HUNG WINDOW (TG–B)			

1070 TECHNOLOGY DRIVE
NOKOMIS, FL 34275

P.O. BOX 1529
NOKOMIS, FL 34274

Series/Model:	Scale:	Sheet:	Drawing No.	Rev:
SH–4000	NTS	3 of 4	2737	C

TYPICAL HEAD CONFIGURATIONS

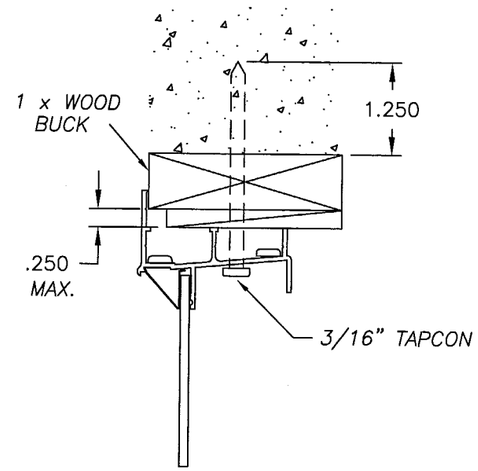

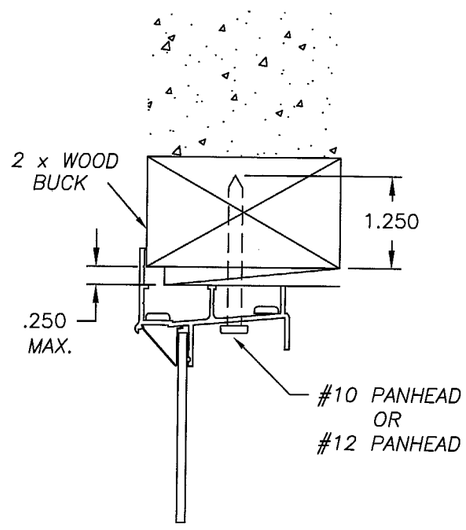

TYPICAL JAMB CONFIGURATIONS

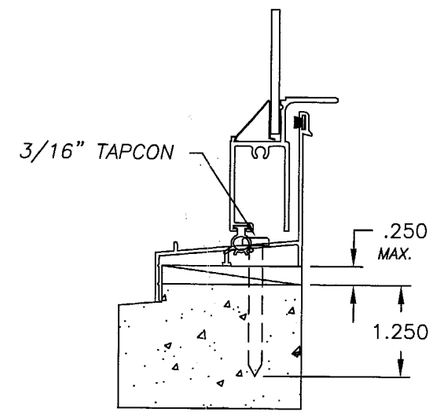

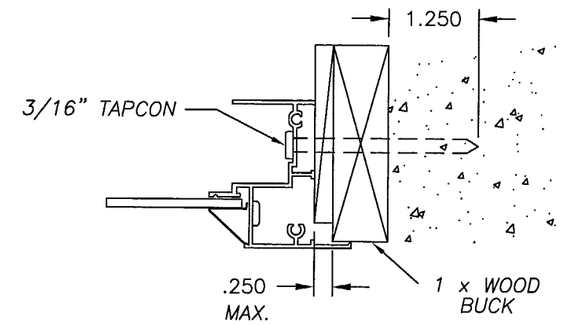

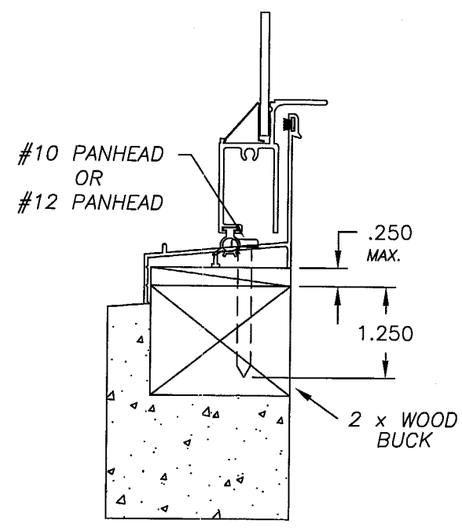

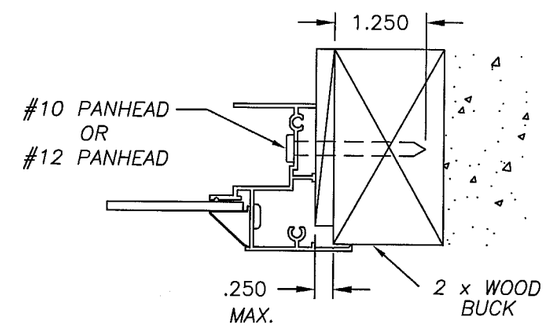

TYPICAL SILL CONFIGURATIONS

APPROVED AS COMPLYING WITH THE SOUTH FLORIDA BUILDING CODE
DATE OCTOBER 04, 2001
BY Craig L. Chandler
PRODUCT CONTROL DIVISION
BUILDING CODE COMPLIANCE OFFICE
ACCEPTANCE NO. 01-0516.11

9/6/01
Robert L. Clark, P.E.
PE #39712
Structural

NOTES:
1.) REFERENCE TEST REPORTS: FTL-2957 (A1, A3, A4), FTL-2958
2.) ANCHORS ARE #10 SCREWS OR 3/16" TAPCONS. (#12 SCREWS MAY BE USED INSTEAD)
3.) ANCHORS ARE LOCATED 5" MAXIMUM FROM EACH CORNER AND 5" MAXIMUM ON EITHER SIDE OF MEETING RAIL. MAXIMUM ANCHOR SPACING OF 16" AT JAMBS AND 20" AT HEAD AND SILL.

PGT INDUSTRIES

	Revsd By: F.K.	Date: 9/6/01	Revisions: REDRAWN
Drawn By: F.K.	Date: 4/18/01		
Description: ANCHORAGE DETAILS – FLANGE			
Title: ALUMINUM SINGLE HUNG WINDOW (TG-B)			

1070 TECHNOLOGY DRIVE NOKOMIS, FL 34275	P.O. BOX 1529 NOKOMIS, FL 34274	Series/Model: SH-4000	Scale: NTS	Sheet: 4 of 4	Drawing No. 2737	Rev: A