MIAMI-DADE COUNTY, FLORIDA
METRO-DADE FLAGLER BUILDING

BUILDING CODE COMPLIANCE OFFICE
METRO-DADE FLAGLER BUILDING
140 WEST FLAGLER STREET, SUITE 1603
MIAMI, FLORIDA 33130-1563
(305) 375-2901 FAX (305) 375-2908

CONTRACTOR LICENSING SECTION
(305) 375-2527 FAX (305) 375-2558

CONTRACTOR ENFORCEMENT DIVISION
(305) 375-2966 FAX (305) 375-2908

PRODUCT CONTROL DIVISION
(305) 375-2902 FAX (305) 372-6339

PRODUCT CONTROL NOTICE OF ACCEPTANCE

Ocean Shutters Manufacturing, Inc.
4900 N.E. 11th Avenue
Fort Lauderdale ,FL 33334

Your application for Notice of Acceptance (NOA) of:
"OSMI-Ultra Light" 0.030" (min.) Galvanized Steel Storm Panels Shutter
under Chapter 8 of the Code of Miami-Dade County governing the use of Alternate Materials and Types of Construction, and completely described herein, has been recommended for acceptance by the Miami-Dade County Building Code Compliance Office (BCCO) under the conditions specified herein.

This NOA shall not be valid after the expiration date stated below. BCCO reserves the right to secure this product or material at any time from a jobsite or manufacturer's plant for quality control testing. If this product or material fails to perform in the approved manner, BCCO may revoke, modify, or suspend the use of such product or material immediately. BCCO reserves the right to revoke this approval, if it is determined by BCCO that this product or material fails to meet the requirements of the South Florida Building Code.

The expense of such testing will be incurred by the manufacturer.

ACCEPTANCE NO.: 01-0516.14
EXPIRES: 09/27/2006

Raul Rodriguez
Chief Product Control Division

THIS IS THE COVERSHEET, SEE ADDITIONAL PAGES FOR SPECIFIC AND GENERAL CONDITIONS
BUILDING CODE & PRODUCT REVIEW COMMITTEE

This application for Product Approval has been reviewed by the BCCO and approved by the Building Code and Product Review Committee to be used in Miami-Dade County, Florida under the conditions set forth above.

Francisco J. Quintana, R.A.
Director
Miami-Dade County
Building Code Compliance Office

APPROVED: 09/27/2001

Ocean Shutters Manufacturing, Inc.

ACCEPTANCE No. : 01-0516.14

APPROVED : 09/27/2001

EXPIRES : 09/27/2006

NOTICE OF ACCEPTANCE: SPECIFIC CONDITIONS

1. SCOPE

This approves 0.031" Galvanized Steel Storm Panels Shutter, as described in Section 2 of this Notice of Acceptance, designed to comply with the South Florida Building Code, 1994 Edition for Miami-Dade County, for the locations where the pressure requirements, as determined by SFBC Chapter 23, do not exceed the Design Pressure Rating values indicated in the approved drawings.

2. PRODUCT DESCRIPTION

This 0.031" Galvanized Steel Storm Panels Shutter and its components shall be constructed in strict compliance with the following documents: Drawing No. 00-394, titled "OSMI Ultra-Light Galvanized Steel Storm Panel", prepared by Knezevich & Associates, Inc., signed and sealed by V. J. Knezevich, P.E., dated April 10, 2001, last revision #1 dated September 5, 2001, sheets 1 through 5 of 5, bearing the Miami-Dade County Product Control approval stamp with the Notice of Acceptance number and approval date by the Miami-Dade County Product Control Division. These documents shall hereinafter be referred to as the approved drawings.

3. LIMITATIONS

All permanent set components, included but not limited to embedded anchor bolts, threaded cones, metal shields, headers and sills, must be protected against corrosion, contamination and damage at all times.

4. INSTALLATION

This 0.031" Galvanized Steel Storm Panels Shutter and its components shall be installed in strict compliance with the approved drawings.

5. LABELING

Each panel shall bear a permanent label with the manufacturer's name or logo, city, state and the following statement: "Miami-Dade County Product Control Approved".

6. BUILDING PERMIT REQUIREMENTS

6.1 Application for building permit shall be accompanied by copies of the following:

6.1.1 This Notice of Acceptance.

6.1.2 Duplicate copies of the approved drawings, as identified in Section 2 of this Notice of Acceptance, clearly marked to show the components selected for the proposed installation.

6.1.3 Any other documents required by the Building Official or the South Florida Building Code (SFBC) in order to properly evaluate the installation of this system.

Helmy A. Makar, P.E. -Product Control Examiner
Product Control Division

Ocean Shutters Manufacturing, Inc.

ACCEPTANCE No. : 01-0516.14

APPROVED : 09/27/2001

EXPIRES : 09/27/2006

NOTICE OF ACCEPTANCE: STANDARD CONDITIONS

1 Renewal of this Acceptance (approval) shall be considered after a renewal application has been filed and the original submitted documents, including test-supporting data, engineering documents, are no older than eight (8) years.

2. Any and all approved products shall be permanently labeled with the manufacturer's name, city, state, and the following statement: "Miami-Dade County Product Control Approved", or as specifically stated in the specific conditions of this Acceptance.

3. Renewals of Acceptance will not be considered if:
   a. There has been a change in the South Florida Building Code affecting the evaluation of this product and the product is not in compliance with the code changes.
   b. The product is no longer the same product (identical) as the one originally approved.
   c. If the Acceptance holder has not complied with all the requirements of this acceptance, including the correct installation of the product.
   d. The engineer, who originally prepared, signed and sealed the required documentation initially submitted, is no longer practicing the engineering profession.

4. Any revision or change in the materials, use, and/or manufacture of the product or process shall automatically be cause for termination of this Acceptance, unless prior written approval has been requested (through the filing of a revision application with appropriate fee) and granted by this office.

5. Any of the following shall also be grounds for removal of this Acceptance:
   a. Unsatisfactory performance of this product or process.
   b. Misuse of this Acceptance as an endorsement of any product, for sales, advertising or any other purposes.

6. The Notice of Acceptance number preceded by the words Miami-Dade County, Florida, and followed by the expiration date may be displayed in advertising literature. If any portion of the Notice of Acceptance is displayed, then it shall be done in its entirety.

7. A copy of this Acceptance as well as approved drawings and other documents, where it applies, shall be provided to the user by the manufacturer or its distributors and shall be available for inspection at the job site at all times. The engineer needs not reseal the copies.

8. Failure to comply with any section of this Acceptance shall be cause for termination and removal of Acceptance.

9. This Notice of Acceptance consists of pages 1, 2 and this last page 3.

END OF THIS ACCEPTANCE

Helmy A. Makar, P.E. -Product Control Examiner
Product Control Division

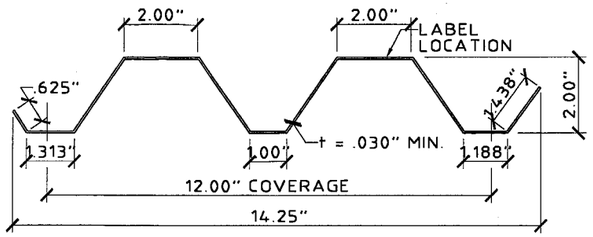

1 **0.031" STEEL STORM PANEL**
SCALE: 3" = 1' - 0"

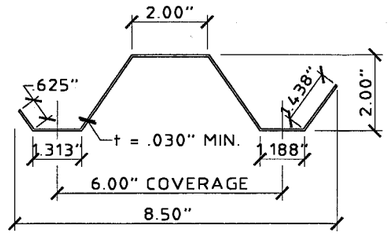

2 **0.031" STEEL HALF STORM PANEL**
SCALE: 3" = 1' - 0"

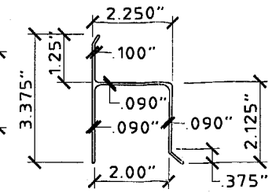

3 **"h" HEADER**
SCALE: 3" = 1' - 0"

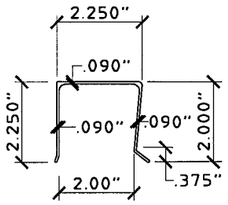

4 **"U" HEADER**
SCALE: 3" = 1' - 0"

GENERAL NOTES:

1. THIS SHUTTER SYSTEM IS DESIGNED IN ACCORDANCE WITH THE SOUTH FLORIDA BUILDING CODE 1994 EDITION FOR MIAMI-DADE COUNTY.
2. POSITIVE AND NEGATIVE DESIGN PRESSURE CALCULATIONS SHALL BE PERFORMED FOR SPECIFIC JOBS IN ACCORDANCE WITH A.S.C.E. 7-88 "MINIMUM DESIGN LOADS FOR BUILDINGS AND OTHER STRUCTURES". TABLES SHALL BE REFERENCED AT THE APPROPRIATE DESIGN LOADS.
3. STORM PANELS SHALL BE 0.031" THICK CONFORMING TO A.S.T.M. A653, SQ. GRADE 80 WITH Fy = 93,110 GALVANIZED COATING. ALL ALUM. EXTRUSIONS SHALL BE 6063-T6 ALUM. ALLOY, U.O.N..
4. PRODUCT MARKINGS SHALL BE WITHIN 12" OF ONE END OF THE PANEL WITH A MIN. OF ONE MARKING PER PANEL, AND SHALL BE LABELED AS FOLLOWS:

   OCEAN SHUTTER MFG. CO., INC.
   FT LAUDERDALE , FLORIDA
   MIAMI-DADE COUNTY PRODUCT CONTROL APPROVED
5. ALL BOLTS AND WASHERS SHALL BE GALVANIZED OR STAINLESS STEEL WITH A MINIMUM TENSILE STRENGTH OF 60 K.S.I.
6. THE DETAILS AND SPECIFICATIONS SHOWN HEREIN REPRESENT THE PRODUCTS TESTED FOR IMPACT, CYCLIC AND UNIFORM STATIC AIR PRESSURE TESTING IN CONFORMANCE WITH MIAMI-DADE COUNTY PROTOCOLS PA 201, 203, AND 202.
   REFERENCE CONSTRUCTION TESTING CORP. (C.T.C.) TEST REPORT No. 01-004
7. TOP & BOTTOM DETAILS SHOWN MAY BE INTERCHANGED AS FIELD CONDITIONS DICTATE. PANELS MAY BE MOUNTED HORIZONTALLY WHERE APPLICABLE.

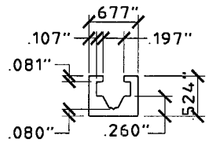

5 **PRE-STUCCO C-TRACK**
SCALE : HALF SIZE

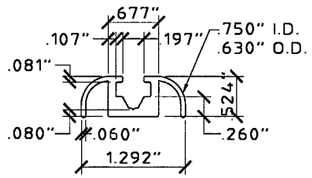

5a **C-TRACK (FINISH)**
SCALE : HALF SIZE

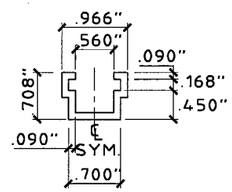

6 **SLIDE TRACK**
SCALE : HALF SIZE

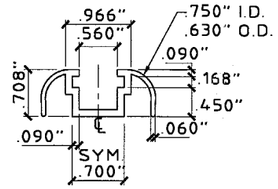

6a **SLIDE TRACK (FINISH)**
SCALE : HALF SIZE

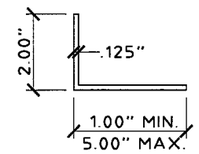

7 **ANGLE**
SCALE: 3" = 1' - 0"

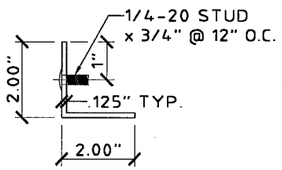

8 **STUD ANGLE**
SCALE: 3" = 1' - 0"

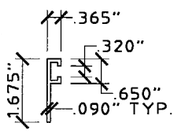

9 **F-TRACK**
SCALE: 3" = 1' - 0"

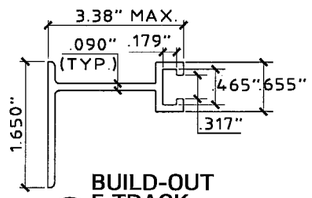

10 **BUILD-OUT F-TRACK**
SCALE : HALF SIZE

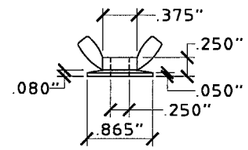

(ZAMAC 3 ALLOY)
11 **WASHERED WINGNUT**
SCALE : HALF SIZE

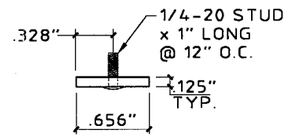

12 **STUDDED STRAP**
(SLIDER, USE WITH 6 OR 6a)
SCALE : HALF SIZE

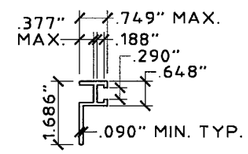

13 **BF-TRACK**
SCALE: 3" = 1' - 0"

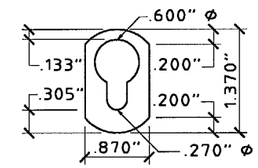

0.09" THICK
14 **KEYHOLE WASHER (OPTIONAL)**
SCALE : HALF SIZE

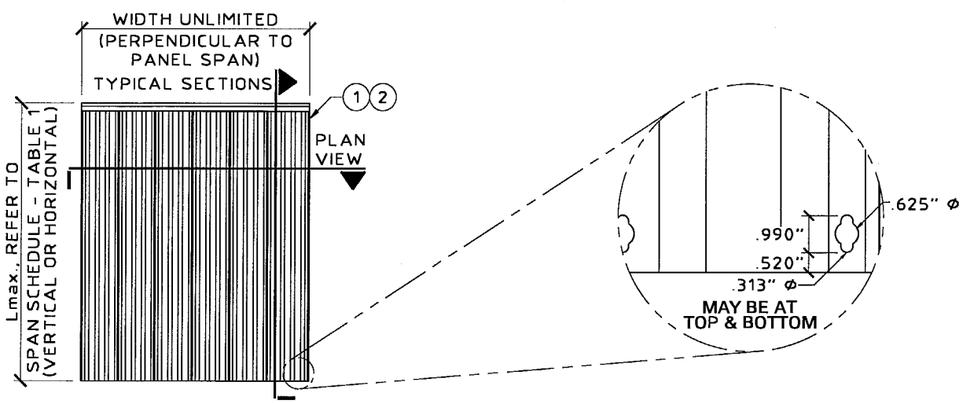

A **PANEL ELEVATION**
SCALE: 1/4" = 1' - 0"

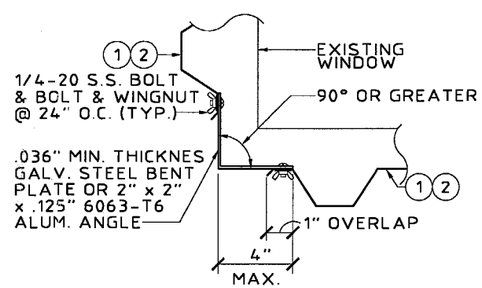

B **CORNER CLOSURE DETAIL**
SCALE: 1-1/2" = 1' - 0"

APPROVED AS COMPLYING WITH THE SOUTH FLORIDA BUILDING CODE
DATE 09/27/2001
BY Helmy A. Mahler
PRODUCT CONTROL DIVISION
BUILDING CODE COMPLIANCE OFFICE
ACCEPTANCE NO. 01-0516.14

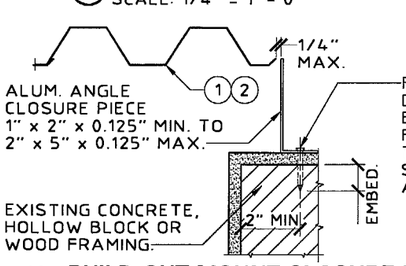

D **BUILD-OUT MOUNT CLOSURE DETAIL**
SCALE: 1-1/2" = 1' - 0"

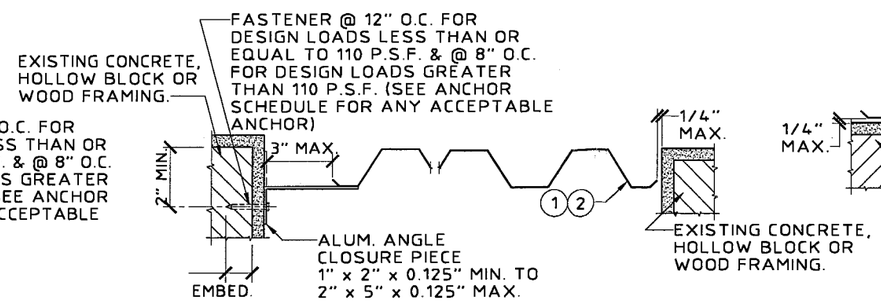

E **TRAP MOUNT CLOSURE DETAIL**
SCALE: 1-1/2" = 1' - 0"

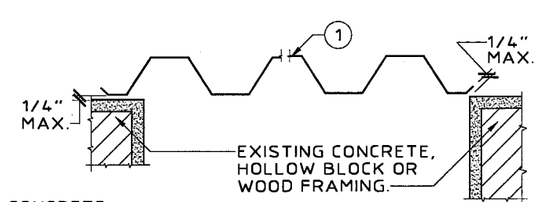

F **WALL MOUNT CLOSURE DETAIL**
SCALE: 1-1/2" = 1' - 0"

KNEZEVICH & ASSOCIATES, INC.
CONSULTING ENGINEERS • PRODUCT TESTING
1260 N. UNIVERSITY DRIVE, SUITE 180 • FORT LAUDERDALE, FL 33322
TEL: (954) 382-2800 • FAX: (954) 382-2989 • FLORIDA COA #3205
WEBSITE: WWW.KNEZEVICH.COM • E-MAIL: KA@KNEZEVICH.COM

COPYRIGHT © 2001 KNEZEVICH & ASSOCIATES, INC.

OSMI ULTRA-LIGHT GALV. STEEL STORM PANEL

4900B N.E. 11th AVE.
FT. LAUDERDALE, FL 33334
(954) 489-9797
Ocean Shutters MANUFACTURING, INC.

V.J. KNEZEVICH
PROFESSIONAL ENGINEER
FL License No:
PE 0010983

SEP 05 2001

revisions

no	date	by	description
1	09/05/01	OB	COUNTY COMMENTS

date	04/10/01
scale AS NOTED	drawn by AV
design by OB	checked by VJK
drawing no.	00-394
sheet 1 of 5	

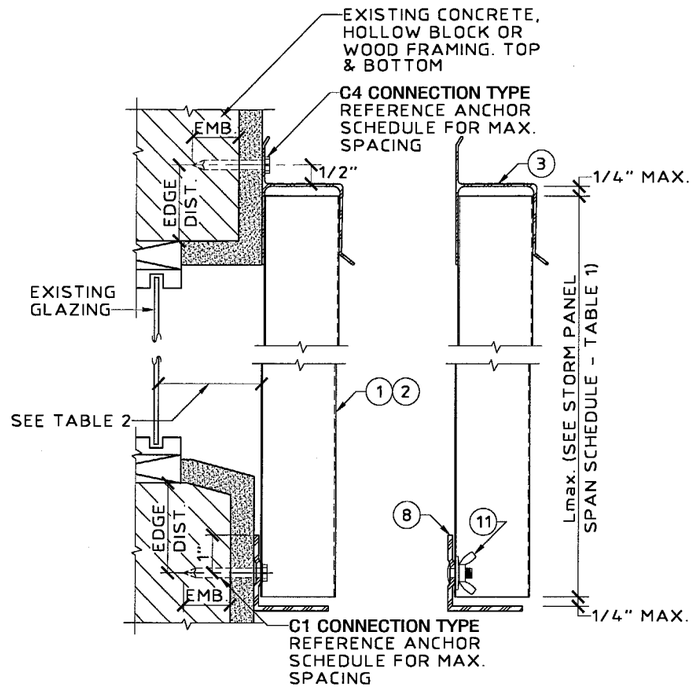

(G) WALL MOUNT SECTION
SCALE: 3" = 1' - 0"

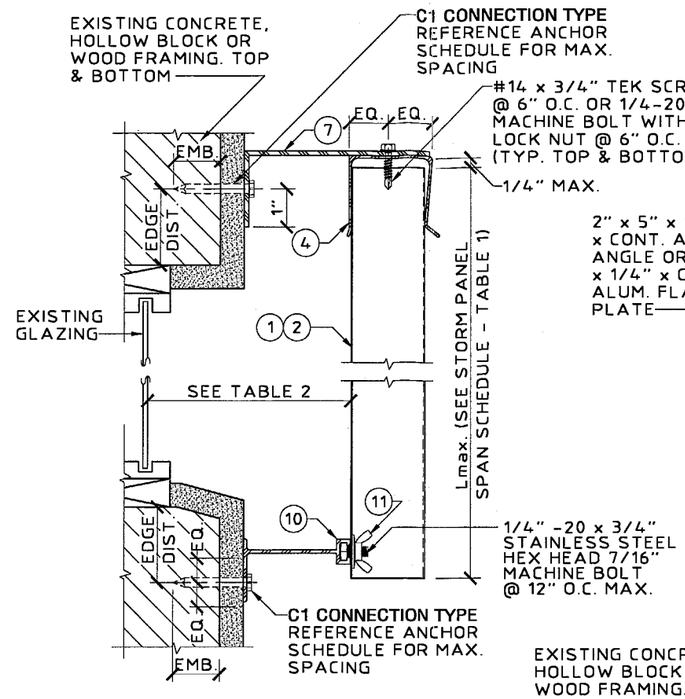

(H) BUILD-OUT MOUNT SECTION
SCALE: 3" = 1' - 0"

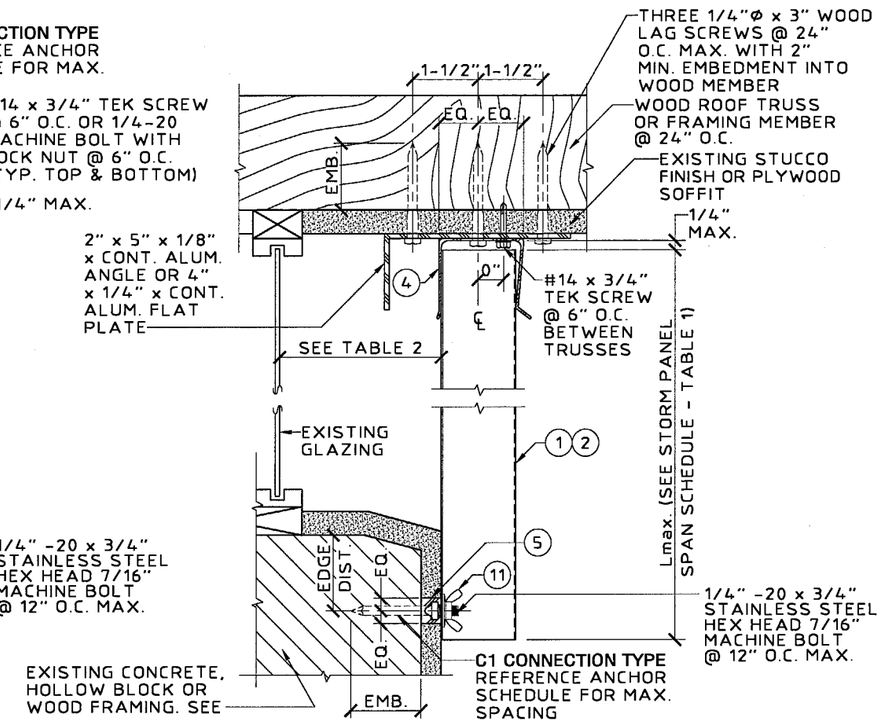

(J) CEILING / PRE-STUCCO TRACK
SCALE: 3" = 1' - 0"

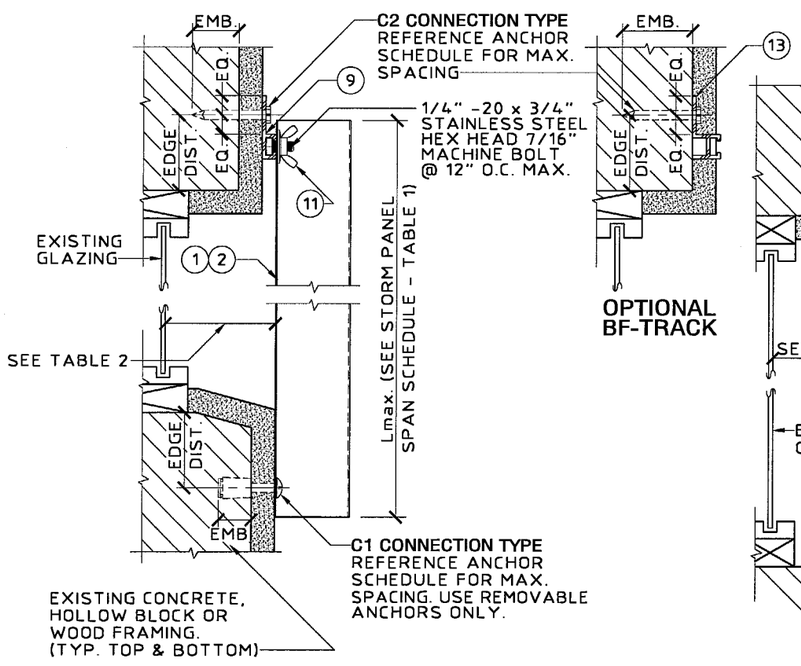

(K) "F" TRACK/DIRECT MOUNT SECTION
SCALE: 3" = 1' - 0"

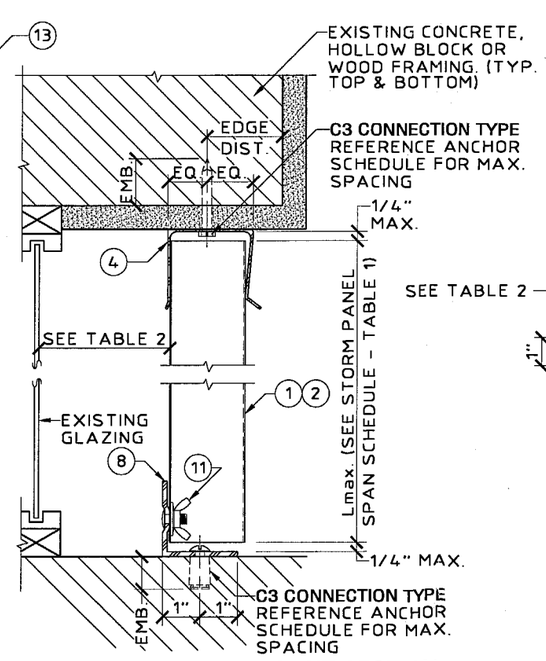

(L) CEILING / FLOOR MOUNT SECTION
SCALE: 3" = 1' - 0"

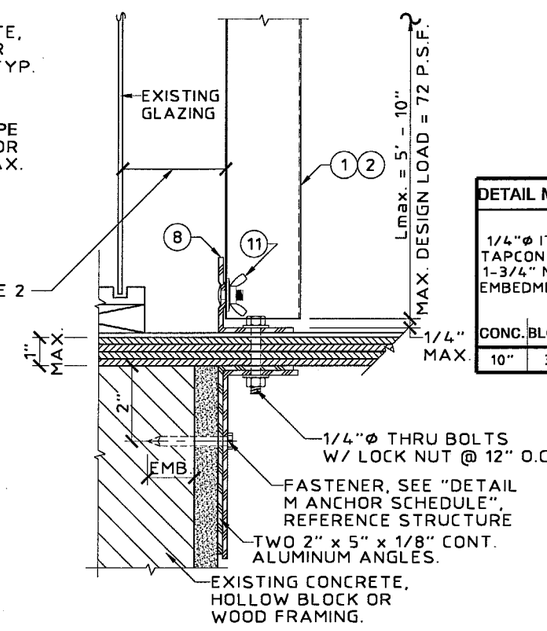

(M) "PASS THRU" SECTION
SCALE: 3" = 1' - 0"

DETAIL M ("PASS THRU" SEC.) ANCHOR SCHEDULE				
1/4"Ø ITW TAPCON W/ 1-3/4" MIN. EMBEDMENT		1/4"Ø POWERS CALK-IN W/ 7/8" EMBEDMENT & 1/4-20 STAINLESS STEEL MACHINE SCREW		1/4"Ø WOOD LAG SCREW W/ MINIMUM 1-3/4" PENETRATION SHEAR PARALLEL OR PERPENDICULAR TO WOOD GRAIN
CONC.	BLOCK	CONC.	BLOCK	WOOD
10"	3"	10"	4"	12"

APPROVED AS COMPLYING WITH THE SOUTH FLORIDA BUILDING CODE
DATE 09/27/2001
BY Helmy A. Mek
PRODUCT CONTROL DIVISION
BUILDING CODE COMPLIANCE OFFICE
ACCEPTANCE NO. 01-0516.14

KNEZEVICH & ASSOCIATES, INC.
CONSULTING ENGINEERS • PRODUCT TESTING
1260 N. UNIVERSITY DRIVE, SUITE 180 • FORT LAUDERDALE, FL 33322
TEL: (954) 382-2800 • FAX: (954) 382-2989 • FLORIDA COA #3205
WEBSITE: WWW.KNEZEVICH.COM • E-MAIL: KA@KNEZEVICH.COM
COPYRIGHT © 2001 KNEZEVICH & ASSOCIATES, INC.

OSMI ULTRA-LIGHT GALV. STEEL STORM PANEL
4900B N.E. 11th AVE.
FT. LAUDERDALE, FL 33334
(954) 489-9797
Ocean Shutters MANUFACTURING, INC.

V.J. KNEZEVICH
PROFESSIONAL ENGINEER
FL License No: PE 0010983
SEP 05 2001

revisions

no	date	by	description
1	09/05/01	OB	COUNTY COMMENTS

date 04/10/01
scale AS NOTED
drawn by AV
design by OB
checked by VJK
drawing no. 00-394
sheet 2 of 5

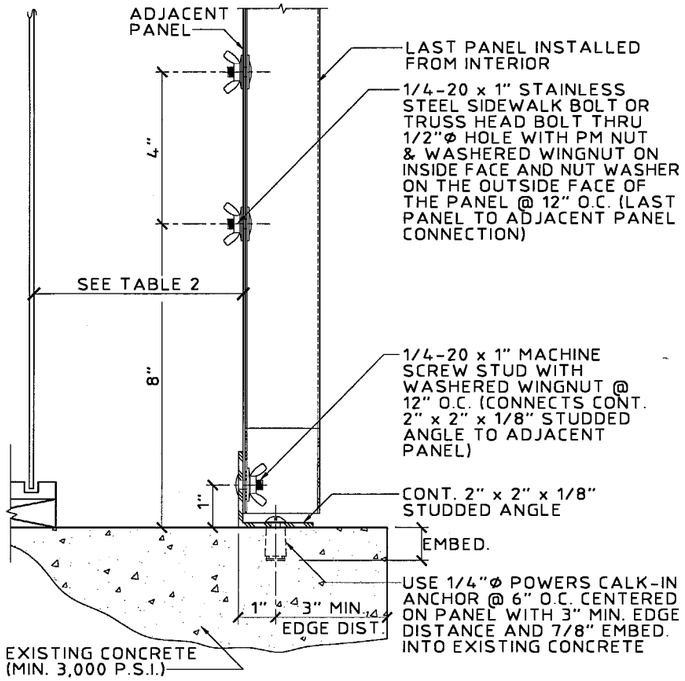

(MAX. PANEL HEIGHT = 8' - 0" AND MAX. DESIGN LOAD = ± 62 P.S.F.)

(N) OPTIONAL INTERIOR FASTENING DETAIL
SCALE: 3" = 1' - 0"

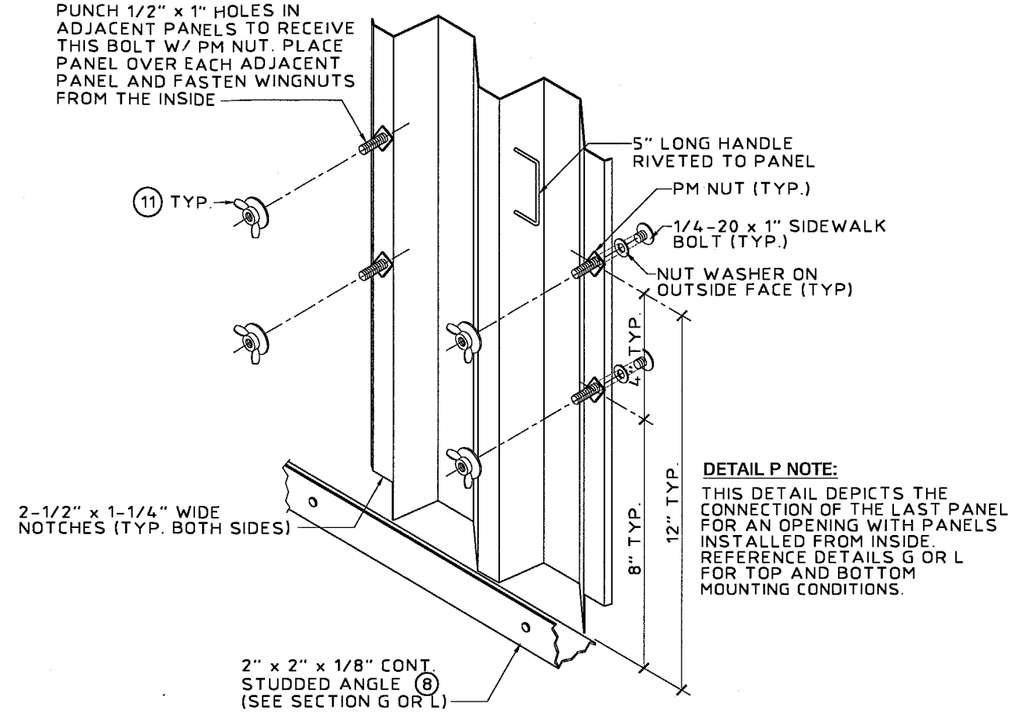

DETAIL P NOTE:
THIS DETAIL DEPICTS THE CONNECTION OF THE LAST PANEL FOR AN OPENING WITH PANELS INSTALLED FROM INSIDE. REFERENCE DETAILS G OR L FOR TOP AND BOTTOM MOUNTING CONDITIONS.

(P) OPTIONAL INTERIOR FASTENING DETAIL (ISOMETRIC)
N.T.S.

APPROVED AS COMPLYING WITH THE SOUTH FLORIDA BUILDING CODE
DATE 09/27/2001
BY Helmy A. Moker
PRODUCT CONTROL DIVISION
BUILDING CODE COMPLIANCE OFFICE
ACCEPTANCE NO 01-0516.14

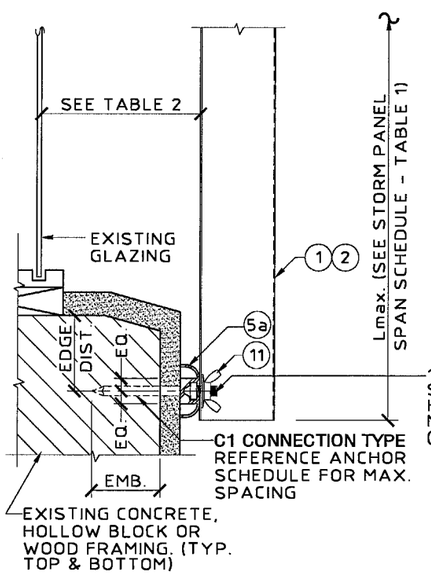

NOTE: USE OF DETAIL SHALL BE IN CONJUNCTION WITH AN " h " HEADER OR " U " HEADER TOP MOUNT

(R) C-TRACK ASSEMBLY - INSIDE CLOUSURE
SCALE: 3" = 1' - 0"

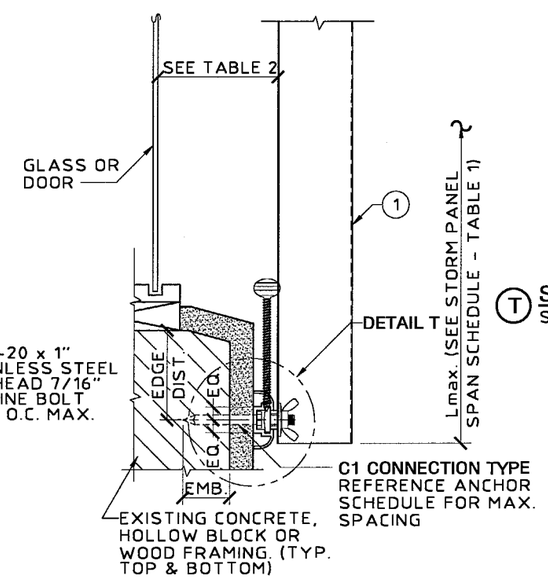

NOTE: USE OF DETAIL SHALL BE IN CONJUNCTION WITH AN " h " HEADER OR " U " HEADER TOP MOUNT

(S) SLIDE TRACK ASSEMBLY - INSIDE MOUNT
SCALE: 3" = 1' - 0"

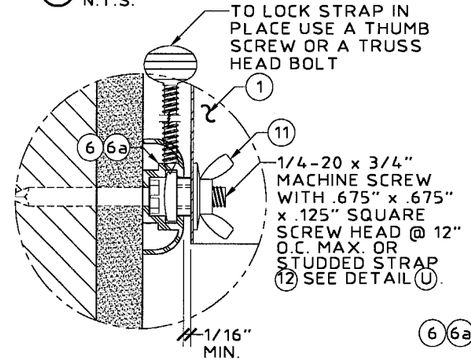

(T) SLIDE TRACK ASSEMBLY - (BLOW UP)
SCALE: HALF SIZE

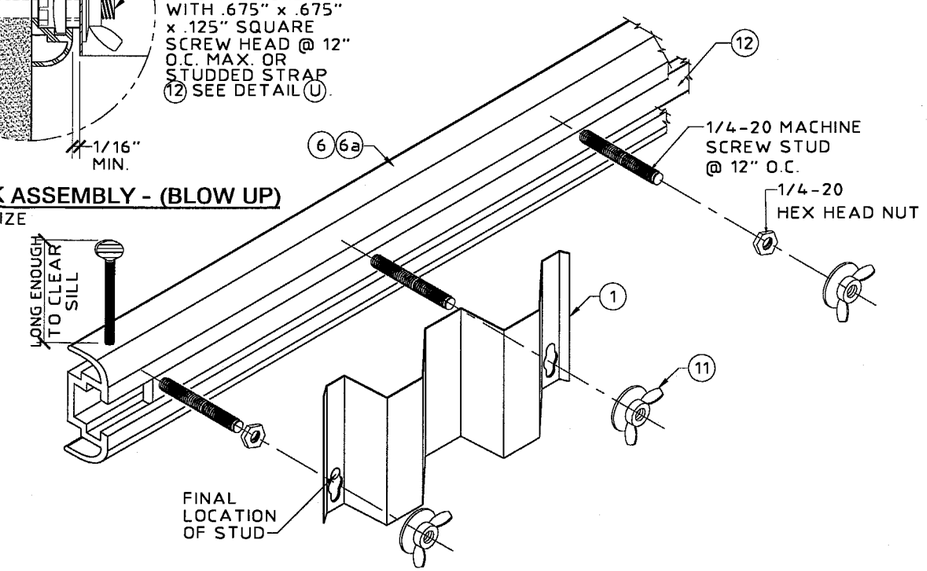

(U) STUDDED STRAP ASSEMBLY (ISOMETRIC VIEW)
N.T.S.

KNEZEVICH & ASSOCIATES, INC.
CONSULTING ENGINEERS • PRODUCT TESTING
1260 N. UNIVERSITY DRIVE, SUITE 180 • FORT LAUDERDALE, FL 33322
TEL: (954) 382-2800 • FAX: (954) 382-2989 • FLORIDA COA #3205
WEBSITE: WWW.KNEZEVICH.COM • E-MAIL: KA@KNEZEVICH.COM

COPYRIGHT © 2001 KNEZEVICH & ASSOCIATES, INC

OSMI ULTRA-LIGHT GALV. STEEL STORM PANEL

4900B N.E. 11th AVE.
FT. LAUDERDALE, FL 33334
(954) 489-9797
Ocean Shutters MANUFACTURING, INC.

V.J. KNEZEVICH
PROFESSIONAL ENGINEER
FL License No: PE 0010983
SEP 05 2001

revisions

no	date	by	description
1	09/05/01	OB	COUNTY COMMENTS

date 04/10/01
scale AS NOTED
drawn by AV
design by OB
checked by VJK
drawing no. 00-394
sheet 3 of 5

ANCHOR SCHEDULE

FASTENER MAX. SPACING (IN.) REQ'D FOR VARIOUS DESIGN LOADS AND SPANS

EXISTING STRUCTURE	ANCHOR TYPE	LOAD (W) P.S.F. MAX. (SEE NOTE 1)	MIN. 3/4" EDGE DISTANCE											
			SPANS UP TO 5' -6" (SEE NOTE 1)				SPANS UP TO 8' - 8" (SEE NOTE 1)				SPANS UP TO 12' - 0" (SEE NOTE 1)			
			CONNECTION TYPE (SEE NOTE 3)				CONNECTION TYPE (SEE NOTE 3)				CONNECTION TYPE (SEE NOTE 3)			
			C1	C2	C3	C4	C1	C2	C3	C4	C1	C2	C3	C4
WOOD	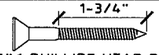 3/16"Ø PHILLIPS HEAD OR #10G WOOD SCREW W/ MIN. 1-1/2" PENETRATION SHEAR PARALLEL OR PERP. TO WOOD GRAIN USE WITH (5) & (5a) ONLY.	48.0	12				12				10			
		62.0	12				10				7			
		72.0	12				9				7			
		92.0	11				7				7			
		200.0	7				7				7			
	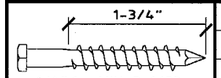 1/4"Ø x MIN. 2-1/2" LONG LAG SCREW W/ MIN. 1-3/4" EMBEDMENT PERPENDICULAR OR PARALLEL TO WOOD GRAIN	48.0	12	12	11	12	12	12	7	12	12	12	5	10
		62.0	12	12	9	12	12	12	5	12	12	12	4	5
		72.0	12	12	7	12	12	12	5	8	12	12	3	5
		92.0	12	12	6	12	12	12	3	5	12	12	3	5
		200.0	12	12	3	5	12	12	3	5	12	12	3	5
	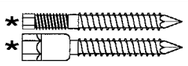 1/4"Ø ELCO MALE/ FEMALE "PANELMATE" W/ 1-7/8 MIN. EMBEDMENT & 1/4-20 MACHINE SCREW WITH NUT	48.0	12	12	12	12	12	12	12	12	12	12	9	11
		62.0	12	12	12	12	12	12	10	12	12	12	7	6
		72.0	12	12	12	12	12	12	8	9	12	12	6	6
		92.0	12	12	10	12	12	12	6	6	12	12	6	6
		200.0	12	12	6	6	12	12	6	6	12	12	6	6
	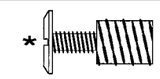 7/16"Ø WOOD BUSHING W/ 5/8" MIN. EMBEDMENT & 1/4-20 STAINLESS STEEL MACHINE SCREW	48.0	12	12		12	10	10		10	7	7		3
		62.0	12	12		12	8	8		4	5	5		
		72.0	11	11		11	7	7			5	5		
		92.0	8	8		4	5	5			5	5		
		200.0	5	5			5	5			5	5		

ANCHOR NOTES:

1. SPANS AND LOADS SHOWN HERE ARE FOR DETERMINING ANCHOR SPACING ONLY. ALLOWABLE STORM PANEL SPANS FOR SPECIFIC LOADS MUST BE LIMITED TO THOSE SHOWN IN TABLE 1.
2. ENTER ANCHOR SCHEDULE BASED ON THE EXISTING STRUCTURE MATERIAL, ANCHOR TYPE AND EDGE DISTANCE. SELECT DESIGN LOAD GREATER THAN OR EQUAL TO NEGATIVE DESIGN LOAD ON SHUTTER AND SELECT SPAN GREATER THAN OR EQUAL TO SHUTTER SPAN.
3. SEE MOUNTING SECTION DETAILS FOR IDENTIFICATION OF CONNECTION TYPE.
4. ANCHORS SHALL BE INSTALLED IN ACCORDANCE WITH MANUFACTURERS' RECOMMENDATIONS.
5. MINIMUM EMBEDMENT AND EDGE DISTANCE EXCLUDES WALL FINISH OR STUCCO. EMBEDMENT OF LAG SCREW SHALL ONLY INCLUDE THE THREADED PORTION AS DESIGNATED IN THE ANCHOR SCHEDULE.
6. FIELD VERIFY THAT FASTENERS ARE INTO ADEQUATE WOOD FRAMING MEMBERS, NOT PLYWOOD. FASTENING TO PLYWOOD IS ACCEPTABLE ONLY FOR SIDE CLOSURE PIECES.
7. WHERE LAG SCREWS FASTEN TO NARROW FACE OF STUD FRAMING, FASTENER SHALL BE LOCATED IN CENTER OF NOMINAL 2" x 4" (MIN.) WOOD STUD. 3/4" EDGE DISTANCE IS ACCEPTABLE FOR WOOD FRAMING. WOOD STUD SHALL BE "SOUTHERN PINE" G=0.55 OR GREATER DENSITY. LAG SCREWS SHALL HAVE PHILLIPS PAN HEAD OR HEX HEAD.
8. MACHINE SCREWS SHALL HAVE MINIMUM OF 1/2" ENGAGEMENT OF THREADS IN BASE ANCHOR AND MAY HAVE EITHER A PAN HEAD, TRUSS HEAD, OR WAFER HEAD (SIDEWALK BOLT) AND WITH NEOPHRENE WASHER FOR DIRECT MOUNT CONDITIONS, U.O.N.
9. ▨ DESIGNATES ANCHOR CONDITIONS WHICH ARE NOT ACCEPTABLE USES.
10. * DESIGNATES ANCHORS WHICH ARE REMOVABLE BY REMOVING MACHINE SCREW, NUT OR WASHERED WINGNUT.

ANCHOR SCHEDULE

FASTENER MAXIMUM SPACING (INCHES) REQUIRED FOR VARIOUS DESIGN LOADS AND SPANS

EXISTING STRUCTURE	ANCHOR TYPE	LOAD (W) P.S.F. MAX. (SEE NOTE 1)	MIN. 2" EDGE DISTANCE											
			SPANS UP TO 5' -6" (SEE NOTE 1)				SPANS UP TO 8' - 8" (SEE NOTE 1)				SPANS UP TO 12' - 0" (SEE NOTE 1)			
			CONNECTION TYPE (SEE NOTE 3)				CONNECTION TYPE (SEE NOTE 3)				CONNECTION TYPE (SEE NOTE 3)			
			C1	C2	C3	C4	C1	C2	C3	C4	C1	C2	C3	C4
CONCRETE	3/16"Ø ITW BUILDEX PHILLIPS FLAT HEAD OR SLOTTED HEX TAPCON W/ 1-3/4" MIN. EMBED USE WITH (5) & (5a) ONLY. (MIN. 3,100 P.S.I. CONCRETE)	48.0	12				12				12			
		62.0	12				12				11			
		72.0	12				12				10			
		92.0	12				10				10			
		200.0	10				10				10			
	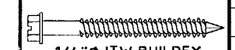 1/4"Ø ITW BUILDEX TAPCON W/ 1-3/4" MIN. EMBEDMENT (MIN. 3,100 P.S.I. CONCRETE)	48.0	12	12	12	12	12	12	12	12	12	12	9	10
		62.0	12	12	12	12	12	12	10	12	12	12	7	5
		72.0	12	12	12	12	12	12	8	8	12	12	6	5
		92.0	12	12	10	12	12	12	6	5	12	12	6	5
		200.0	12	12	6	5	12	12	6	5	12	12	6	5
	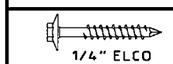 1/4" ELCO MAXISET TAPCON W/ 1-3/4" MIN. EMBEDMENT (MIN. 3,100 P.S.I. CONCRETE)	48.0	12	12	12	12	12	12	12	12	12	12	10	9
		62.0	12	12	12	12	12	12	11	11	12	12	8	5
		72.0	12	12	12	12	12	12	9	7	12	12	7	5
		92.0	12	12	12	12	12	12	7	5	12	12	7	5
		200.0	12	12	7	5	12	12	7	5	12	12	7	5
	1/4"Ø ELCO TAPCON W/ 1-3/4" MIN. EMBEDMENT (MIN. 3,000 P.S.I. CONCRETE)	48.0	12	12	12	12	12	12	12	12	12	12	10	9
		62.0	12	12	12	12	12	12	11	11	12	12	8	5
		72.0	12	12	12	12	12	12	9	7	12	12	7	5
		92.0	12	12	12	12	12	12	7	5	12	12	7	5
		200.0	12	12	7	5	12	12	7	5	12	12	7	5
	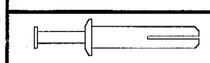 1/4"Ø POWERS ZAMAC NAIL-IN W/ 1-1/8" MIN. EMBEDMENT (MIN. 3,000 P.S.I. CONCRETE)	48.0	12	12	12	12	12	12	8	12	11	11	6	5
		62.0	12	12	10	12	12	12	6	6	8	8	4	
		72.0	12	12	9	12	10	10	5	4	8	8	4	
		92.0	12	12	7	7	8	8	4		8	8	4	
		200.0	8	8	4		8	8	4		8	8	4	
	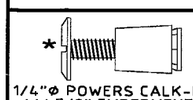 1/4"Ø POWERS CALK-IN W/ 7/8" EMBEDMENT & 1/4-20 STAINLESS STEEL MACHINE SCREW (MIN. 3,000 P.S.I. CONCRETE)	48.0	12	12	12	12	12	12	11	12	12	12	8	10
		62.0	12	12	12	12	12	12	8	12	12	12	6	5
		72.0	12	12	11	12	12	12	7	8	12	12	5	5
		92.0	12	12	9	12	12	12	5	5	12	12	5	5
		200.0	12	12	5	5	12	12	5	5	12	12	5	5
	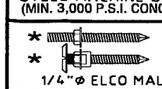 1/4"Ø ELCO MALE/ FEMALE "PANELMATE" W/ 1-3/4 MIN. EMBEDMENT & 1/4-20 MACHINE SCREW WITH NUT (MIN. 3,300 P.S.I. CONCRETE)	48.0	12	12	12	12	12	12	12	12	12	12	10	10
		62.0	12	12	12	12	12	12	10	12	12	12	7	6
		72.0	12	12	12	12	12	12	9	8	12	12	7	5
		92.0	12	12	11	12	12	12	7	5	12	12	7	5
		200.0	12	12	7	5	12	12	7	5	12	12	7	5

APPROVED AS COMPLYING WITH THE SOUTH FLORIDA BUILDING CODE
DATE 09/27/2001
BY Helmy H. Mohr
PRODUCT CONTROL DIVISION
BUILDING CODE COMPLIANCE OFFICE
ACCEPTANCE NO. 01-0516.14

KNEZEVICH & ASSOCIATES, INC.
CONSULTING ENGINEERS • PRODUCT TESTING
1260 N. UNIVERSITY DRIVE, SUITE 180 • FORT LAUDERDALE, FL 33322
TEL: (954) 382-2800 • FAX: (954) 382-2989 • FLORIDA COA #3205
WEBSITE: WWW.KNEZEVICH.COM • E-MAIL: KA@KNEZEVICH.COM
COPYRIGHT © 2001 KNEZEVICH & ASSOCIATES, INC

OSMI ULTRA-LIGHT GALV. STEEL STORM PANEL
4900B N.E. 11th AVE.
FT. LAUDERDALE, FL 33334
(954) 489-9797
Ocean Shutters MANUFACTURING, INC.

V.J. KNEZEVICH
PROFESSIONAL ENGINEER
FL License No: PE 0010983
SEP 05 2001

revisions			
no	date	by	description
1	09/05/01	OB	COUNTY COMMENTS

date 04/10/01
scale AS NOTED | drawn by AV
design by OB | checked by VJK
drawing no. 00-394
sheet 4 of 5

ANCHOR SCHEDULE

FASTENER MAXIMUM SPACING (INCHES) REQUIRED FOR VARIOUS DESIGN LOADS AND SPANS

EXISTING STRUCTURE	ANCHOR TYPE	LOAD (W) P.S.F. MAX. (SEE NOTE 1)	MIN. 2" EDGE DISTANCE: SPANS UP TO 5'-6" (SEE NOTE 1) CONNECTION TYPE (SEE NOTE 3)				SPANS UP TO 8'-8" (SEE NOTE 1) CONNECTION TYPE (SEE NOTE 3)				SPANS UP TO 12'-0" (SEE NOTE 1) CONNECTION TYPE (SEE NOTE 3)			
			C1	C2	C3	C4	C1	C2	C3	C4	C1	C2	C3	C4
HOLLOW CONCRETE BLOCK	3/16"Φ ITW BUILDEX PHILLIPS FLAT HEAD OR SLOTTED HEX TAPCON W/ 1-1/4" MIN. EMBED. USE WITH (5) & (5a) ONLY	48.0	10				6				4			
		62.0	8				5				3			
		72.0	7				4				3			
		92.0	5				3				3			
		200.0	3				3				3			
	1/4"Φ ITW BUILDEX TAPCON W/ 1-1/4" MIN. EMBEDMENT	48.0	12	12	9	12	10	10	6	10	7	7	4	3
		62.0	12	12	7	12	8	8	4	4	5	5	3	
		72.0	11	11	6	11	7	7	4		5	5	3	
		92.0	8	8	5	4	5	5	3		5	5	3	
		200.0	5	5	3		5	5	3		5	5	3	
	1/4" ELCO MAXISET TAPCON W/ 1-1/4" MIN. EMBEDMENT	48.0	12	12	12	12	12	12	8	12	9	9	6	4
		62.0	12	12	10	12	10	10	6	5	7	7	4	
		72.0	12	12	9	12	8	8	5	3	7	7	4	
		92.0	11	11	7	6	7	7	4		7	7	4	
		200.0	7	7	4		7	7	4		7	7	4	
	1/4"Φ ELCO TAPCON W/ 1-1/4" MIN. EMBEDMENT	48.0	12	12	12	12	12	12	8	12	9	9	6	4
		62.0	12	12	10	12	10	10	6	5	7	7	4	
		72.0	12	12	9	12	8	8	5	3	7	7	4	
		92.0	11	11	7	6	7	7	4		7	7	4	
		200.0	7	7	4		7	7	4		7	7	4	
	1/4"Φ POWERS ZAMAC NAIL-IN W/ 1-1/8" MIN. EMBEDMENT	48.0	12	12	10	12	10	10	6	10	7	7	4	3
		62.0	12	12	7	12	7	7	5	3	5	5	3	
		72.0	10	10	6	10	6	6	4		5	5	3	
		92.0	8	8	5	4	5	5	3		5	5	3	
		200.0	5	5	3		5	5	3		5	5	3	
	* 1/4"Φ POWERS CALK-IN W/ 7/8" EMBEDMENT & 1/4-20 STAINLESS STEEL MACHINE SCREW	48.0	12	12	10	12	12	12	6	12	9	9	4	4
		62.0	12	12	8	12	10	10	5	5	7	7	3	
		72.0	12	12	6	12	9	9	4	3	7	7	3	
		92.0	11	11	5	6	7	7	3		7	7	3	
		200.0	7	7	3		7	7	3		7	7	3	
	* * 1/4"Φ ELCO MALE/ FEMALE "PANELMATE" W/ 1-1/4 MIN. EMBEDMENT & 1/4-20 MACHINE SCREW WITH NUT	48.0	12	12	12	12	12	12	8	12	12	12	6	6
		62.0	12	12	10	12	12	12	6	7	11	11	4	3
		72.0	12	12	9	12	12	12	5	5	10	10	4	3
		92.0	12	12	7	9	10	10	4	3	10	10	4	3
		200.0	10	10	4	3	10	10	4	3	10	10	4	3

SEE PAGE 4 FOR COMPLETE ANCHOR NOTES.

TABLE 2 — MINIMUM STORM PANEL SEPARATION FROM GLASS

POSITIVE DESIGN LOAD (W) (P.S.F.)	ACTUAL SPAN (L) (FT - IN)	COLUMN 1: MIN. SEP. FOR ALL INSTALLATIONS EQUAL TO OR LESS THAN 30' ABOVE GRADE (INCHES)	COLUMN 2: MIN. SEP. FOR ALL INSTALLATIONS GREATER THAN 30' ABOVE GRADE (INCHES)
30.0	6'-0"	3	1-3/8
	8'-8"	3	1-3/4
	11'-10"	3-1/2	3
40.0	6'-0"	3	1-1/2
	8'-8"	3	2
	11'-0"	3-1/2	3
50.0	6'-0"	3	1-1/2
	8'-8"	3	2
	10'-5"	3-1/2	3
60.0	6'-0"	3	1-1/2
	8'-8"	3	2-1/4
	10'-0"	3-1/2	3
70.0	6'-0"	3	1-5/8
	8'-8"	3	2-1/2
	9'-7"	3-1/2	3

TABLE 2 NOTE:

1. ENTER TABLE 2 WITH POSITIVE DESIGN LOAD TO DETERMINE MIN. STORM PANEL SEPARATION FROM GLASS.

TABLE 1 NOTE:

1. ENTER TABLE 1 WITH NEGATIVE DESIGN LOAD TO DETERMINE MAX. PANEL LENGTH. POSITIVE LOADS LESS THAN OR EQUAL TO THE NEGATIVE LOAD ARE ACCEPTABLE. FOR DESIGN LOADS BETWEEN TABULATED VALUES. NEXT HIGHER LOAD OR LINEAR INTERPOLATION MAY BE USED TO DETERMINE ALLOWABLE SPANS.

TABLE 1 — MAX. ALLOWABLE STORM PANEL SPAN SCHEDULE

DESIGN LOAD (P.S.F.)	SPAN (FT - IN)
30	11 - 10
35	11 - 5
40	11 - 0
45	10 - 9
50	10 - 5
55	10 - 2
60	10 - 0
62	9 - 11
65	9 - 9
70	9 - 6
72	9 - 2
75	8 - 10
80	8 - 3
90	8 - 0
100	7 - 8
110	7 - 1
120	6 - 6
130	6 - 0
140	5 - 6
150	5 - 2
160	4 - 10
170	4 - 7
180	4 - 4
190	4 - 1
200	3 - 10
210	3 - 8
220	3 - 6
230	3 - 4

APPROVED AS COMPLYING WITH THE SOUTH FLORIDA BUILDING CODE
DATE 9/27/2001
BY Helmy A. Maher
PRODUCT CONTROL DIVISION
BUILDING CODE COMPLIANCE OFFICE
ACCEPTANCE NO 01-0516.14

KNEZEVICH & ASSOCIATES, INC.
CONSULTING ENGINEERS • PRODUCT TESTING
1260 N. UNIVERSITY DRIVE, SUITE 180 • FORT LAUDERDALE, FL 33322
TEL: (954) 382-2800 • FAX: (954) 382-2989 • FLORIDA COA #3205
WEBSITE: WWW.KNEZEVICH.COM • E-MAIL: KA@KNEZEVICH.COM

COPYRIGHT © 2001 KNEZEVICH & ASSOCIATES, INC.

OSMI ULTRA-LIGHT GALV. STEEL STORM PANEL
4900B N.E. 11th AVE.
FT. LAUDERDALE, FL 33334
(954) 489-9797
Ocean Systems MANUFACTURING, INC.

V.J. KNEZEVICH
PROFESSIONAL ENGINEER
FL License No: PE 0010983
SEP 05 2001

revisions			
no	date	by	description
1	09/05/01	DB	COUNTY COMMENTS

date 04/10/01
scale AS NOTED | drawn by AV
design by DB | checked by VJK
drawing no. 00-394
sheet 5 of 5