MIAMI-DADE

MIAMI-DADE COUNTY, FLORIDA
METRO-DADE FLAGLER BUILDING

BUILDING CODE COMPLIANCE OFFICE
METRO-DADE FLAGLER BUILDING
140 WEST FLAGLER STREET, SUITE 1603
MIAMI, FLORIDA 33130-1563
(305) 375-2901 FAX (305) 375-2908

CONTRACTOR LICENSING SECTION
(305) 375-2527 FAX (305) 375-2558

CONTRACTOR ENFORCEMENT DIVISION
(305) 375-2966 FAX (305) 375-2908

PRODUCT CONTROL DIVISION
(305) 375-2902 FAX (305) 372-6339

PRODUCT CONTROL NOTICE OF ACCEPTANCE

Lomanco, Inc.
2101 W. Main St.
Jacksonville ,AR 72076

Your application for Notice of Acceptance (NOA) of:
BIB-12, BEB-12, BIB-12TR, BEB-12TR Whirlybirds
under Chapter 8 of the Code of Miami-Dade County governing the use of Alternate Materials and Types of Construction, and completely described herein, has been recommended for acceptance by the Miami-Dade County Building Code Compliance Office (BCCO) under the conditions specified herein.

This NOA shall not be valid after the expiration date stated below. BCCO reserves the right to secure this product or material at any time from a jobsite or manufacturer's plant for quality control testing. If this product or material fails to perform in the approved manner, BCCO may revoke, modify, or suspend the use of such product or material immediately. BCCO reserves the right to revoke this approval, if it is determined by BCCO that this product or material fails to meet the requirements of the South Florida Building Code.

The expense of such testing will be incurred by the manufacturer.

ACCEPTANCE NO.: 01-0614.04
EXPIRES: 08/16/2006

Raul Rodriguez
Chief Product Control Division

THIS IS THE COVERSHEET, SEE ADDITIONAL PAGES FOR SPECIFIC AND GENERAL CONDITIONS
BUILDING CODE & PRODUCT REVIEW COMMITTEE

This application for Product Approval has been reviewed by the BCCO and approved by the Building Code and Product Review Committee to be used in Miami-Dade County, Florida under the conditions set forth above.

Francisco J. Quintana, R.A.
Director
Miami-Dade County
Building Code Compliance Office

APPROVED: 08/16/2001

ROOFING ASSEMBLY APPROVAL

Category: Roofing
Sub-Category: Roof Vent

Approval Date: **August 16, 2001**

Expiration Date: **August 16, 2006**

Materials: Aluminum
Maximum Design Pressure N/A
Fire Classification: N/A

TRADE NAMES OF PRODUCTS MANUFACTURED OR LABELED BY APPLICANT:

Product	Dimensions	Test Specification	Product Description
BIB-12 WhirlyBird®	12" wide at base 17-1/8" high Vanes 0.0175" thick Elbo 0.0305" thick Base 0.025" thick	PA 100(A)	Turbine ventilation system for shingle installation.
BIB-12TR Whirlybird®	12" wide at base 20-½" high Vanes 0.0175" thick Elbo 0.0305" thick Base 0.025" thick	PA 100(A)	Turbine ventilation system for tile intallation.
BEB-12 WhirlyBird®	12" wide at base 17-1/8" high Vanes 0.0175" thick Elbo 0.0305" thick Base 0.025" thick	PA 100(A)	Turbine ventilation system for shingle installation.
BEB-12TR Whirlybird®	12" wide at base 20-½" high Vanes 0.0175" thick Elbo 0.0305" thick Base 0.025" thick	PA 100(A)	Turbine ventilation system for tile intallation.
Turbine Cap	12" dia.	PA 100(A)	Turbine cap to be installed in the event of a Hurricane Warning.

TRADE NAMES OF PRODUCTS MANUFACTURED BY OTHERS:

Product	Dimensions	Test Specification	Product Description	Manufacturer
Asphalt Roof Cement		ASTM D 4586	Asbestos-free, asphalt based roof cement.	Generic
Asphalt Primer		ASTM D 41	Asphalt Primer	generic
Roofing Nails	Minimum #12 x 1¼"	PA 114	Corrosion resistant annular ring shank nails	generic
Sheet Metal Screws	Minimum #10 x ½"	PA 114	Sheet metal screw	generic

Frank Zuloaga, RRC
Roofing Product Control Examiner

EVIDENCE SUBMITTED:

Test Agency/Identifier	Name	Report	Date
Center for Applied Engineering	PA 100(A)	MDC-117	03/95
Center for Applied Engineering	PA 100(A)	MTS -257493B	12/95

Frank Zuloaga, RRC
Roofing Product Control Examiner

APPROVED APPLICATIONS

Tradename: BIB-12 WhirlyBird®, BEB-12 WhirlyBird®

System Type A: Mechanical attachment of turbine vent over composition shingles.

Cutout: At chosen location (see Lomanco's instructions for proper placement) and centered between two roof rafters, cut a 12" diameter hole through shingles and sheathing boards. Seal around top and sides of hole with approved roofing cement.

Installation: Determine roof pitch in compliance with Lomanco's instructions and align roof pitch number on elbow with indicator line on flashing. Place three short screws through holes that line up with pre-drilled holes in base.

Place mounting base unit flat on the shingles on its flashing, and coat underside of base flashing with roofing cement. In its pitch-adjusted position, carefully slide upper half of flashing up roof beneath shingles previously rolled back until base is centered over cutout. Rolling back the shingles where necessary, and rechecking pitch setting for vertical alignment, secure the base unit to the roof deck with a minimum of fourteen ring shank roofing nails, equally spaced, approximately ¾" from edge of base per detail drawing "Base". Nails shall be of sufficient length to penetrate through roof sheathing a minimum of ½". Apply roofing cement to underside of shingles overlapping flashing, and press them down onto the flashing. Nail down flashing not covered by shingles ½" to 1" from outer edge with equally spaced ring shank roofing nails.

Rotate top of elbow to level position by turning counterclockwise. Place locking clamp across seam and tighten as shown in Lomanco's instructions with approved sheet metal screw. Seal all seams and nails with approved roofing cement.

Position whirlybird on the base. Line up the pre-drilled holes in the brackets and base and fasten with approved long sheet metal screws.

After installation, verify that whirlybird turns freely. If necessary, minor adjustment may be made by gently prying lowest point of turbine upward to remove any wobble.

Net Free Area: Refer to manufacturers published literature

Note: **Apply roofing cement to seal all exposed flashing edges and seams.**

Frank Zuloaga, RRC
Roofing Product Control Examiner

APPROVED APPLICATIONS

Tradename: BIB-12TR Whirlybird®, BEB-12TR Whirlybird®

System Type A: Mechanical attachment of turbine vent for tile or slate roofing.

Cutout: At chosen location (see Lomanco's instructions for proper placement) and centered between two rafters, cut a 12" diameter hole through sheathing boards.

Installation: After application of 30 lb. felt and 90 lb. roofing material (hot mopped) per Roofing Application Standards RAS 118,119,120, cut 12" diameter hole in roofing membranes to match previous hole cut in sheathing.
Rotate top of elbow clockwise and level in both directions. Prime both sides of base flashing with ASTM D 41 primer, and coat underside of base flashing with ASTM D 4586 flashing cement. Center base over hole and secure the base unit to the roof deck with a minimum of fourteen ring shank roofing nails, equally spaced, approximately ¾" from edge of base per detail drawing "Base". Cut a piece of 90 lb. roofing material a minimum width of 30" x 30" and cut a 12" diameter hole in the center of the roofing material. Place the piece of roofing material over base and hot mop in place. Seal inside center hole of cap sheet with approved flashing cement. Place locking clamp across seam and tighten as shown in Lomanco's instructions with supplied fastener. Seal all seams with approved roofing cement.

Position Whirlybird® on elbow and attach using three sheet metal screws provided. Check to see that Whirlybird® turns freely. If necessary, minor adjustment may be made by gently prying lowest point of turbine upward to remove any wobble.

Net Free Area: Refer to manufacturers published literature

Note: **Apply roofing cement to seal all exposed flashing edges and seams.**

Frank Zuloaga, RRC
Roofing Product Control Examiner

LIMITATIONS:

1. Refer to applicable building codes for required ventilation.

2. BIB-12, BEB-12 Whirlybird® turbine roof ventilators shall be installed over composition shingles roofs only.

3. BIB-12, BEB-12, BIB-12TR, BEB-12TR, Whirlybird® turbine roof ventilators shall not be installed on roof mean heights greater than 33 feet.

4. In the event of a Hurricane Warning or in the event of a high wind event with expected wind speeds in excess of 70 mph, the BIB-12TR, BEB-12TR turbine head shall be removed and replaced with the approved storm cap listed herein.

DETAIL DRAWINGS

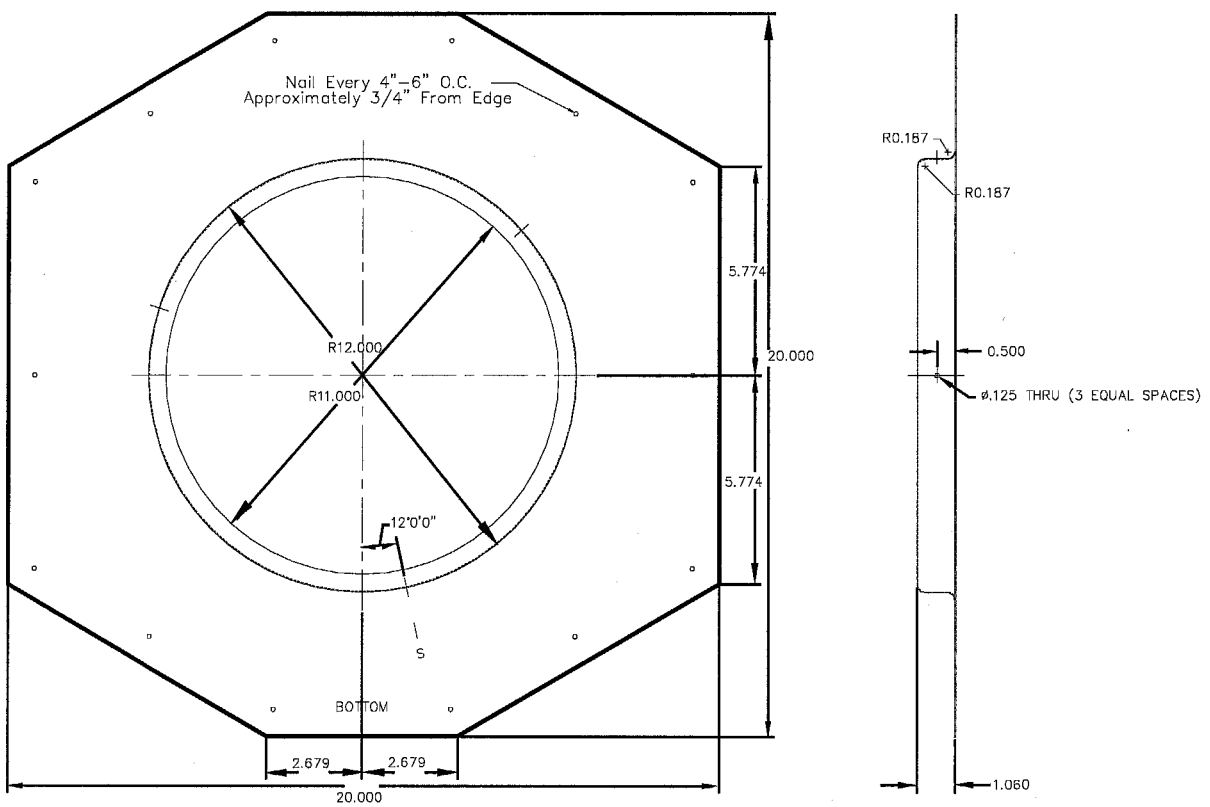

BASE

Frank Zuloaga, RRC
Roofing Product Control Examiner

DETAIL DRAWINGS (CONT'D)

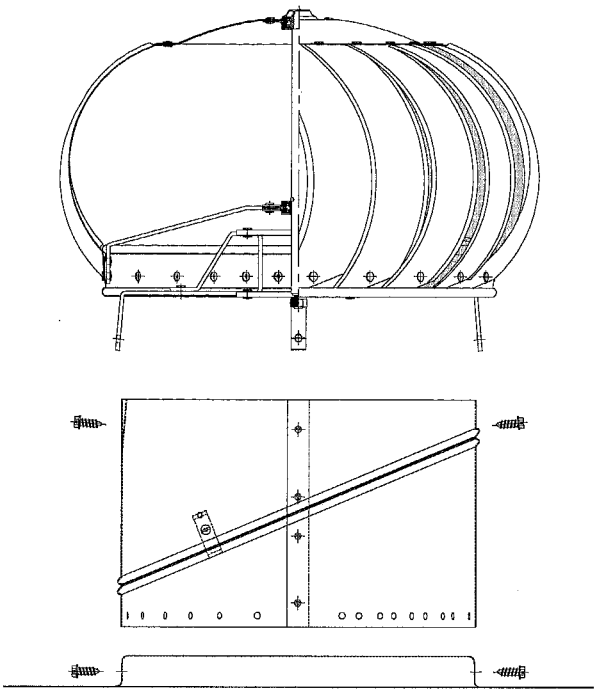

BIB-12, BIB-12TR

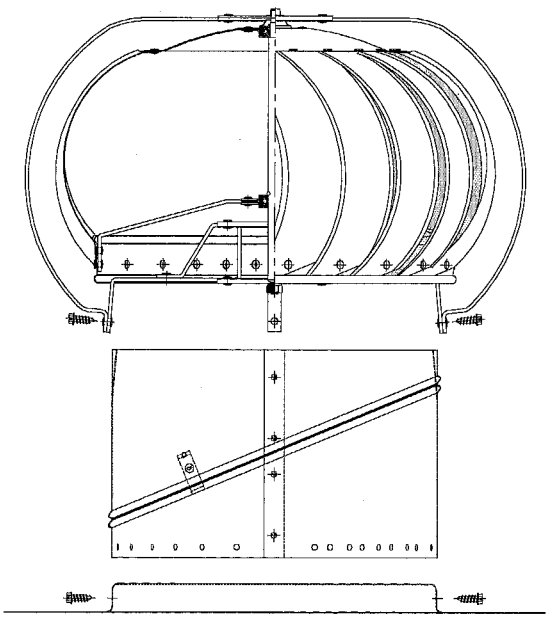

BEB-12, BEB-12TR

Frank Zuloaga, RRC
Roofing Product Control Examiner

NOTICE OF ACCEPTANCE STANDARD CONDITIONS

1 Renewal of this Acceptance (approval) shall be considered after a renewal application has been filed and the original submitted documentation, including test supporting data, engineering documents, are no older than eight (8) years.

2 Any and all approved products shall be permanently labeled with the manufacturer's name, city, state, and the following statement: "Miami-Dade County Product Control Approved", or as specifically stated in the specific conditions of this Acceptance.

3 Renewals of Acceptance will not be considered if:
   a) There has been a change in the South Florida Building Code affecting the evaluation of this product and the product is not in compliance with the code changes;
   b) The product is no longer the same product (identical) as the one originally approved;
   c) If the Acceptance holder has not complied with all the requirements of this acceptance, including the correct installation of the product;
   d) The engineer who originally prepared, signed and sealed the required documentation initially submitted, is no longer practicing the engineering profession.

4 Any revision or change in the materials, use, and/or manufacture of the product or process shall automatically be cause for termination of this Acceptance, unless prior written approval has been requested (through the filing of a revision application with appropriate fee) and granted by this office.

5 Any of the following shall also be grounds for removal of this Acceptance:
   a) Unsatisfactory performance of this product or process;
   b) Misuse of this Acceptance as an endorsement of any product, for sales, advertising or any other purposes.

6 The Notice of Acceptance number preceded by the words Miami-Dade County, Florida, and followed by the expiration date may be displayed in advertising literature. If any portion of the Notice of Acceptance is displayed, then it shall be done in its entirety.

7 A copy of this Acceptance as well as approved drawings and other documents, where it applies, shall be provided to the user by the manufacturer or its distributors and shall be available for inspection at the job site at all times. The copies need not be resealed by the engineer.

8 Failure to comply with any section of this Acceptance shall be cause for termination and removal of Acceptance.

9 This Acceptance contains pages 1 through 8.

END OF THIS ACCEPTANCE

Frank Zuloaga, RRC
Roofing Product Control Examiner