MIAMI-DADE COUNTY, FLORIDA
METRO-DADE FLAGLER BUILDING

BUILDING CODE COMPLIANCE OFFICE
METRO-DADE FLAGLER BUILDING
140 WEST FLAGLER STREET, SUITE 1603
MIAMI, FLORIDA 33130-1563
(305) 375-2901 FAX (305) 375-2908

CONTRACTOR LICENSING SECTION
(305) 375-2527 FAX (305) 375-2558

CONTRACTOR ENFORCEMENT DIVISION
(305) 375-2966 FAX (305) 375-2908

PRODUCT CONTROL DIVISION
(305) 375-2902 FAX (305) 372-6339

PRODUCT CONTROL NOTICE OF ACCEPTANCE

ICS 3-D Panel Works, Inc.
2610 Sidney Lanier Drive
Brunswick ,GA 31525

Your application for Notice of Acceptance (NOA) of:
ICS 3-D Wall Panel System
under Chapter 8 of the Code of Miami-Dade County governing the use of Alternate Materials and Types of Construction, and completely described herein, has been recommended for acceptance by the Miami-Dade County Building Code Compliance Office (BCCO) under the conditions specified herein.

This NOA shall not be valid after the expiration date stated below. BCCO reserves the right to secure this product or material at any time from a jobsite or manufacturer's plant for quality control testing. If this product or material fails to perform in the approved manner, BCCO may revoke, modify, or suspend the use of such product or material immediately. BCCO reserves the right to revoke this approval, if it is determined by BCCO that this product or material fails to meet the requirements of the South Florida Building Code.

The expense of such testing will be incurred by the manufacturer.

ACCEPTANCE NO.: 01-0614.07
EXPIRES: 06/14/2006

Raul Rodriguez
Chief Product Control Division

THIS IS THE COVERSHEET, SEE ADDITIONAL PAGES FOR SPECIFIC AND GENERAL CONDITIONS
BUILDING CODE & PRODUCT REVIEW COMMITTEE

This application for Product Approval has been reviewed by the BCCO and approved by the Building Code and Product Review Committee to be used in Miami-Dade County, Florida under the conditions set forth above.

Francisco J. Quintana, R.A.
Director
Miami-Dade County
Building Code Compliance Office

APPROVED: 08/09/2001

NOTICE OF ACCEPTANCE: SPECIFIC CONDITIONS

1. SCOPE

This renews the Notice of Acceptance No. 98-0610.06, which was issued on February 25, 1999. It approves an ICS 3-D Wall Panel System, as described in Section 2 of this Notice of Acceptance, designed to comply with the South Florida Building Code, 1994 Edition for Miami-Dade County, for the locations where the pressure requirements, as determined by SFBC Chapter 23, do not exceed the Design Pressure Rating values indicated in the approved drawings.

2. PRODUCT DESCRIPTION

This ICS 3-D Wall Panel System and its components shall be constructed in strict compliance with the following documents: Drawing titled "ICS 3-D Wall Panel Details" prepared by Roger C. Purcell, P.E., dated April 10, 1995, sheets 1 through 7 of 7, and Drawing titled "Standard 3-D Section; Minimum 3-D Section; Maximum 3-D Section; 2-hr Rated 3-D Section; Allowable Wind Loads on ICS 3-D Panels" prepared by Roger C. Purcell, P.E., dated January 13, 1995, revised August, 1989, sheets 1 through 5 of 5, each bearing the Miami-Dade County Product Control approval and renewal stamps with the Notice of Acceptance numbers and approval dates by the Miami-Dade County Product Control Division. These documents shall hereinafter be referred to as the approved drawings.

3. LIMITATIONS

The structural strength of the ICS 3-D Wall Panel System shown in figures D-1 through D-4. Figure D-5 shows the capacity to resist wind load at non-bearing exterior wall panels. Special provisions shall be made for the reinforcing of the jambs and lintels at openings. Gabled end walls shall be constructed with continuous ICS 3-D Wall Panels from foundation to roof sheathing. No hybrid construction, combination of ICS 3-D Wall Panels with wood gable trusses, is permitted.

4. INSTALLATION

This ICS 3-D Wall Panel System and its components shall be installed in strict compliance with the approved drawings.

5. LABELING

Each panel shall bear a permanent label with the manufacturer's name or logo, city, state and the following statement: "Miami-Dade County Product Control Approved".

6. BUILDING PERMIT REQUIREMENTS

6.1 Application for building permit shall be accompanied by copies of the following:

6.1.1 This Notice of Acceptance.

6.1.2 Duplicate copies of the approved drawings, as identified in Section 2 of this Notice of Acceptance, clearly marked to show the components selected for the proposed installation.

6.1.3 Any other documents required by the Building Official or the South Florida Building Code (SFBC) in order to properly evaluate the installation of this system.

Helmy A. Makar, P.E. - Product Control Examiner
Product Control Division

ICS 3-D Panel Works, Inc.

ACCEPTANCE No. : 01-0614.07

APPROVED : 08/09/2001

EXPIRES : 06/14/2006

NOTICE OF ACCEPTANCE: STANDARD CONDITIONS

1 Renewal of this Acceptance (approval) shall be considered after a renewal application has been filed and the original submitted documents, including test-supporting data, engineering documents, are no older than eight (8) years.

2. Any and all approved products shall be permanently labeled with the manufacturer's name, city, state, and the following statement: "Miami-Dade County Product Control Approved", or as specifically stated in the specific conditions of this Acceptance.

3. Renewals of Acceptance will not be considered if:
   a. There has been a change in the South Florida Building Code affecting the evaluation of this product and the product is not in compliance with the code changes.
   b. The product is no longer the same product (identical) as the one originally approved.
   c. If the Acceptance holder has not complied with all the requirements of this acceptance, including the correct installation of the product.
   d. The engineer, who originally prepared, signed and sealed the required documentation initially submitted, is no longer practicing the engineering profession.

4. Any revision or change in the materials, use, and/or manufacture of the product or process shall automatically be cause for termination of this Acceptance, unless prior written approval has been requested (through the filing of a revision application with appropriate fee) and granted by this office.

5. Any of the following shall also be grounds for removal of this Acceptance:
   a. Unsatisfactory performance of this product or process.
   b. Misuse of this Acceptance as an endorsement of any product, for sales, advertising or any other purposes.

6. The Notice of Acceptance number preceded by the words Miami-Dade County, Florida, and followed by the expiration date may be displayed in advertising literature. If any portion of the Notice of Acceptance is displayed, then it shall be done in its entirety.

7. A copy of this Acceptance as well as approved drawings and other documents, where it applies, shall be provided to the user by the manufacturer or its distributors and shall be available for inspection at the job site at all time. The engineer needs not reseal the copies.

8. Failure to comply with any section of this Acceptance shall be cause for termination and removal of Acceptance.

9. This Notice of Acceptance consists of pages 1, 2 and this last page 3.

END OF THIS ACCEPTANCE

Helmy A. Makar

Helmy A. Makar, P.E. - Product Control Examiner
Product Control Division

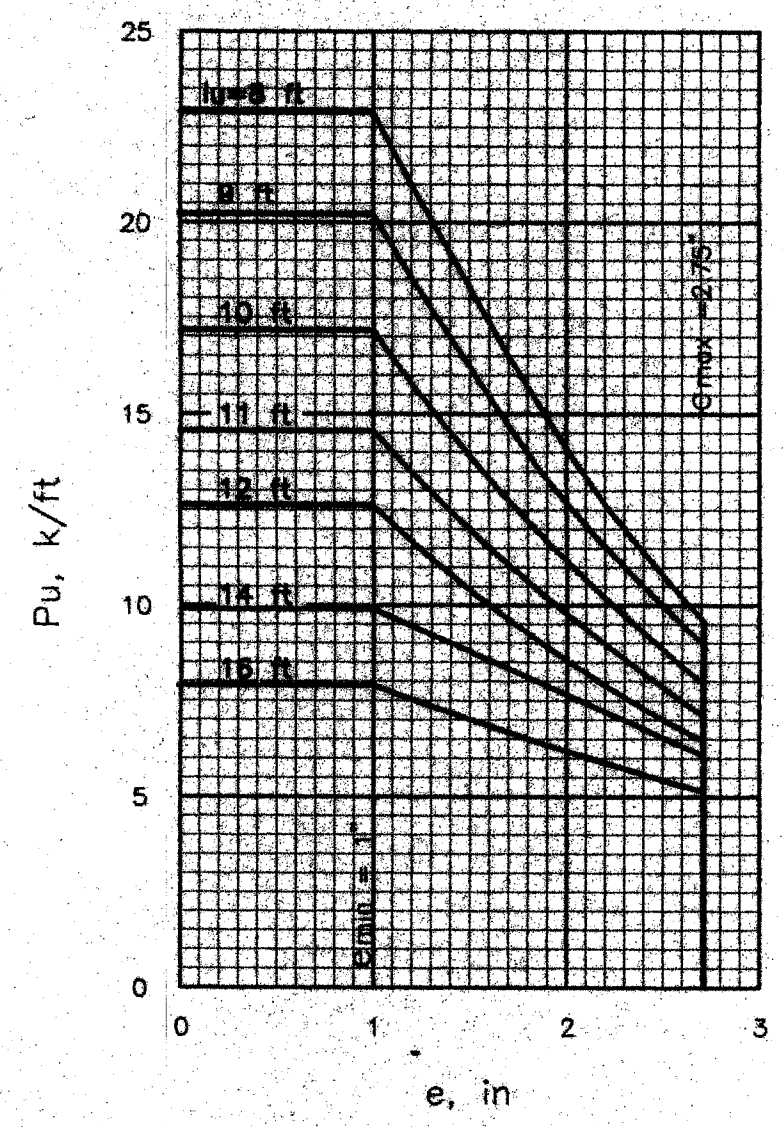

Structures with steel or wood floors or roofs.

$\beta_d = 0.3$

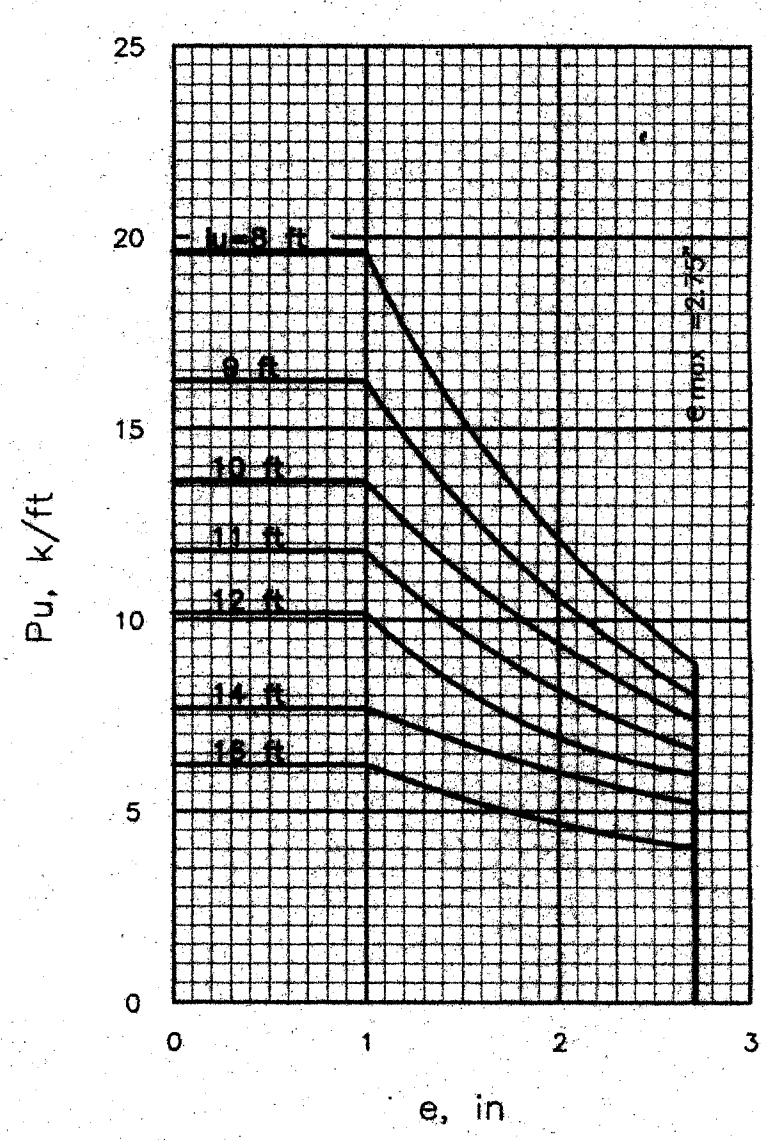

Structures with concrete floors or roofs.

$\beta_d = 0.7$

Concrete thickness	– 1.5 in. each side
Insulation thickness	– 2.5 in.
Wythe reinforcement	– 2 x 2 – W1.1 x W1.1 WWF
Diagonal wires	– W1.7–9 per sq. ft.

Use with Pu = 1.4D + 1.7L

Fig. D–1 Design Loads and Eccentricities

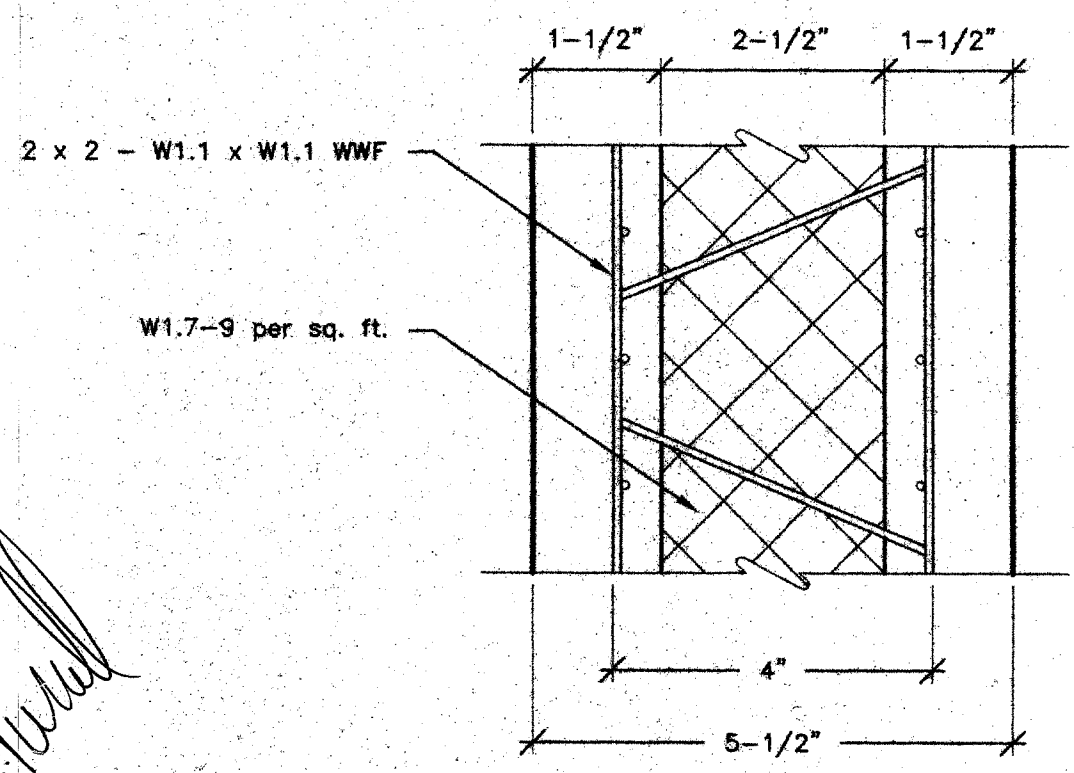

Figure 1

*Reference: "Structural Analysis of Insteel 3–D Wall Panels"
by
The Consulting Engineers Group – May 1989
Last Revised August 1989

PRODUCT RENEWED
ACCEPTANCE No. 01-0614.07
EXPIRATION DATE 06/14/2006
By Helmy A. Meh
PRODUCT CONTROL DIVISION
BUILDING CODE COMPLIANCE OFFICE

APPROVED AS COMPLYING WITH THE SOUTH FLORIDA BUILDING CODE
DATE February 25 1999
BY Helmy A. Meh
PRODUCT CONTROL DIVISION
BUILDING CODE COMPLIANCE OFFICE
ACCEPTANCE NO. 98-0616.06

ICS 3–D PANEL WORKS, Inc. 2610 SIDNEY LANIER DRIVE BRUNSWICK, GEORGIA 31525 912–264–3772	Standard 3–D Section	
	Roger C. Purcell, P.E. Florida Registration No. 29361 1/13/95	1 of 5

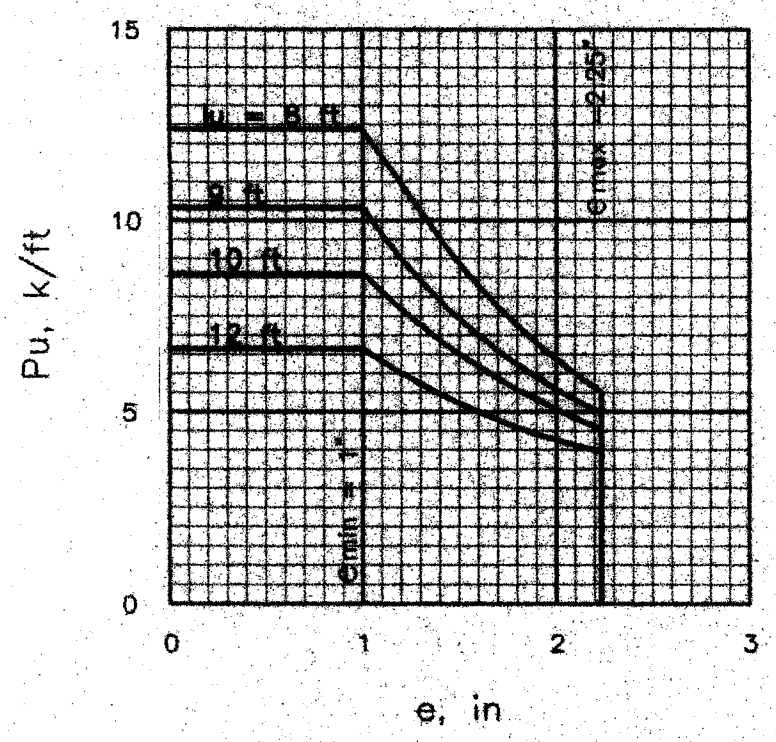

Structures with steel or wood floors or roofs.

$\beta_d = 0.3$

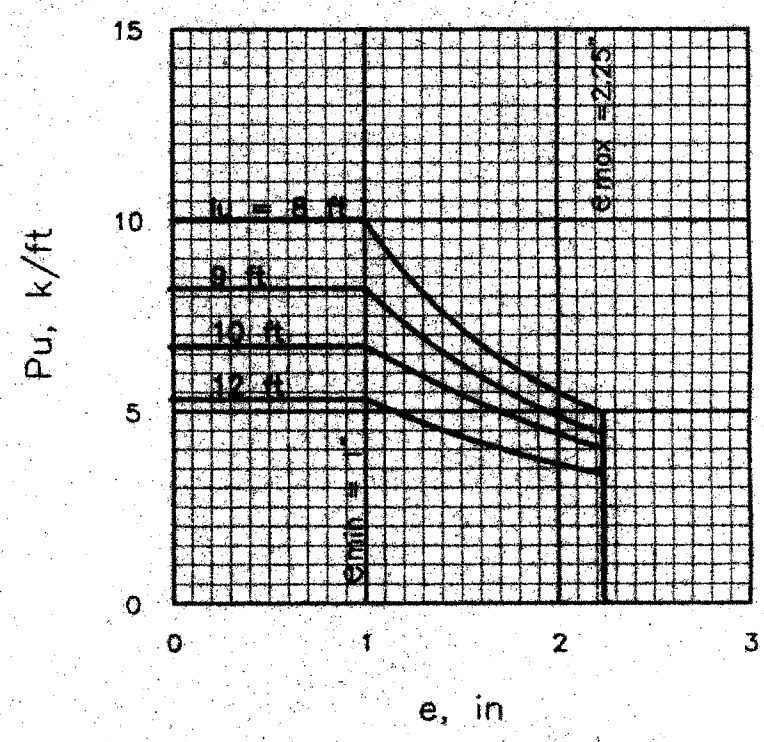

Structures with concrete floors or roofs.

$\beta_d = 0.7$

Concrete thickness	– 1.5 in. each side
Insulation thickness	– 1.5 in.
Wythe reinforcement	– 2 x 2 – W0.5 x W0.5 WWF
Diagonal wires	– W1.7–9 per sq. ft.

Use with Pu = 1.4D + 1.7L

Fig. D–2 Design Loads and Eccentricities

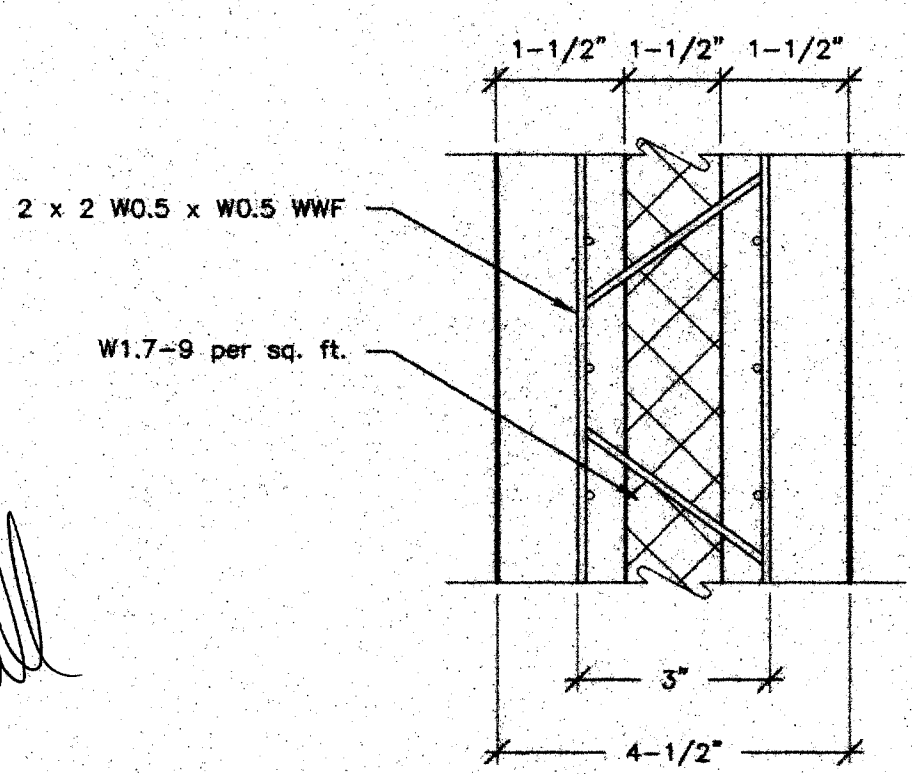

Figure 2

*Reference: "Structural Analysis of Insteel 3–D Wall Panels"
by
The Consulting Engineers Group – May 1989
Last Revised August 1989

PRODUCT RENEWED
ACCEPTANCE No. 01-0614.07
EXPIRATION DATE 06/14/2006
By Helmy A. Mahr
PRODUCT CONTROL DIVISION
BUILDING CODE COMPLIANCE OFFICE

APPROVED AS COMPLYING WITH THE SOUTH FLORIDA BUILDING CODE
DATE February 25 1999
BY Helmy A. Mahr
PRODUCT CONTROL DIVISION
BUILDING CODE COMPLIANCE OFFICE
ACCEPTANCE NO. 98-0610.06

ICS 3–D PANEL WORKS, Inc. 2610 SIDNEY LANIER DRIVE BRUNSWICK, GEORGIA 31525 912–264–3772	**Minimum 3–D Section**	
	Roger C. Purcell, P.E. Florida Registration No. 29361 1/13/95	2 of 5

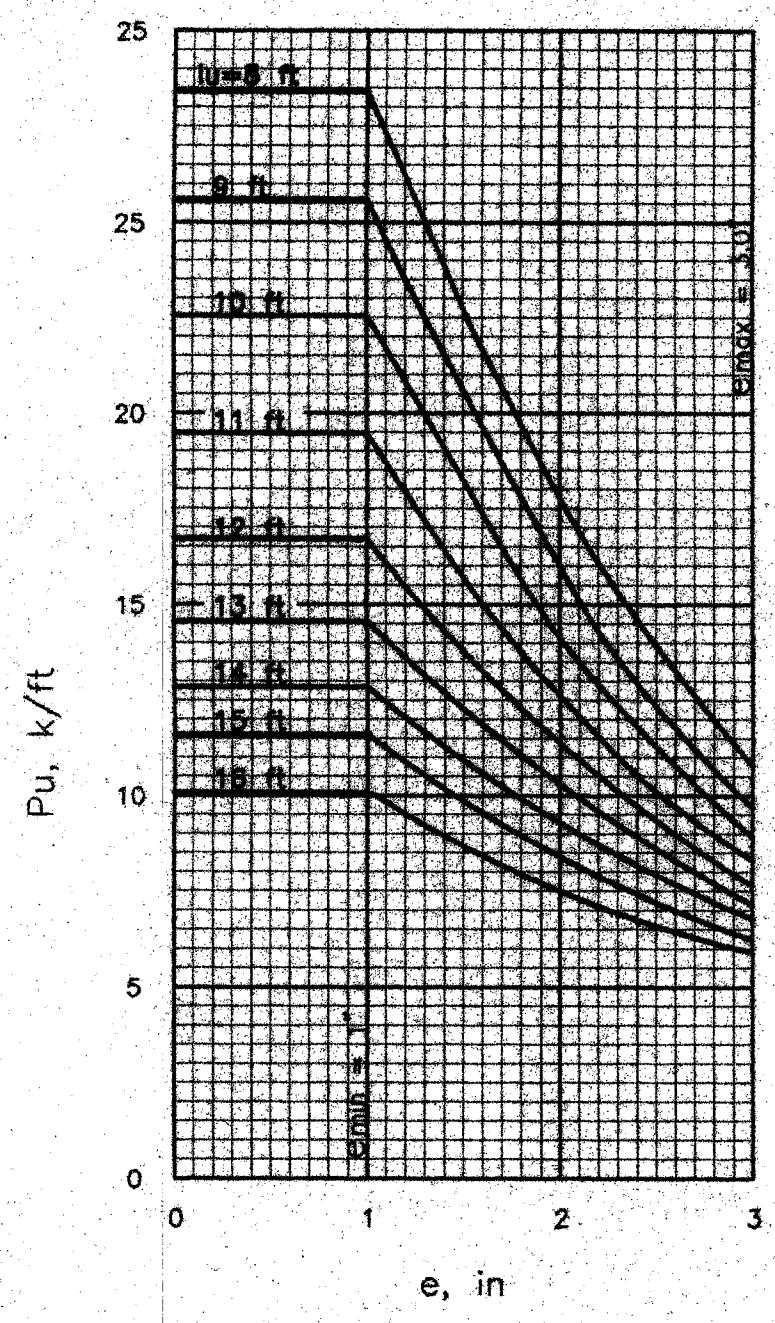

Structures with steel or wood floors or roofs.

$\beta_d = 0.3$

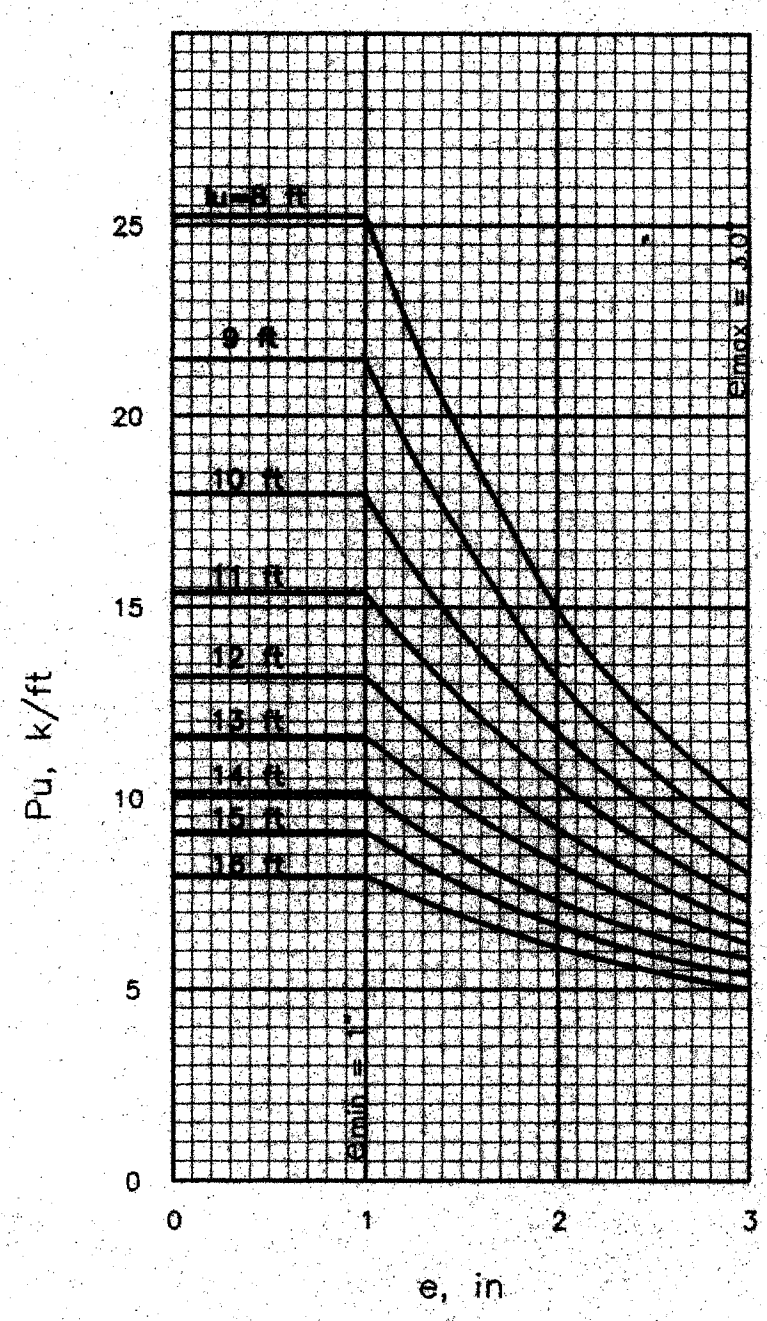

Structures with concrete floors or roofs.

$\beta_d = 0.7$

Concrete thickness	– 1.75 in. each side
Insulation thickness	– 2.5 in.
Wythe reinforcement	– 2 x 2 – W1.1 x W1.1 WWF
Diagonal wires	– W1.7–9 per sq. ft.

Use with Pu = 1.4D + 1.7L

Fig. D–3 Design Loads and Eccentricities

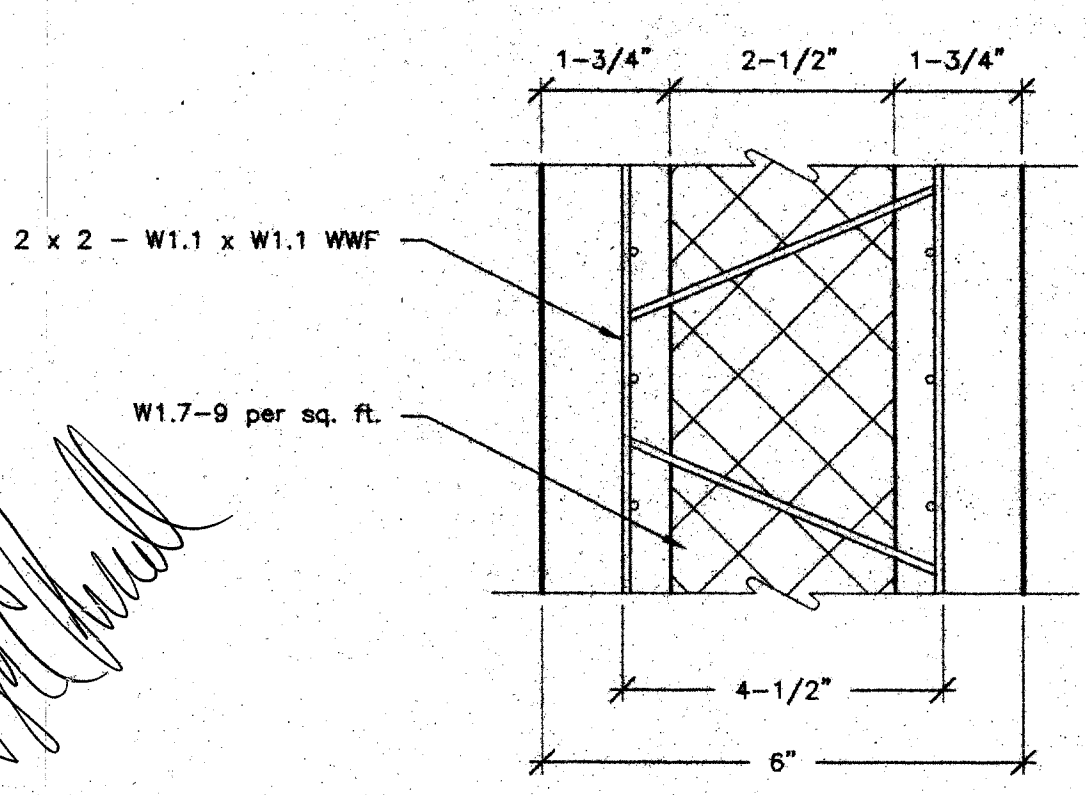

*Reference: "Structural Analysis of Insteel 3–D Wall Panels" by The Consulting Engineers Group – May 1989 Last Revised August 1989

Figure 3

PRODUCT RENEWED
ACCEPTANCE No. DL-0614.07
EXPIRATION DATE 06/14/2006
By Helmy A. Mahar
PRODUCT CONTROL DIVISION
BUILDING CODE COMPLIANCE OFFICE

APPROVED AS COMPLYING WITH THE SOUTH FLORIDA BUILDING CODE
DATE February 25 1999
BY Helmy A. Mahar
PRODUCT CONTROL DIVISION
BUILDING CODE COMPLIANCE OFFICE
ACCEPTANCE NO. 98-0610.06

ICS 3–D PANEL WORKS, Inc. 2610 SIDNEY LANIER DRIVE BRUNSWICK, GEORGIA 31525 912–264–3772	Maximum 3–D Section	
	Roger C. Purcell, P.E. Florida Registration No. 29361 1/13/95	3 of 5

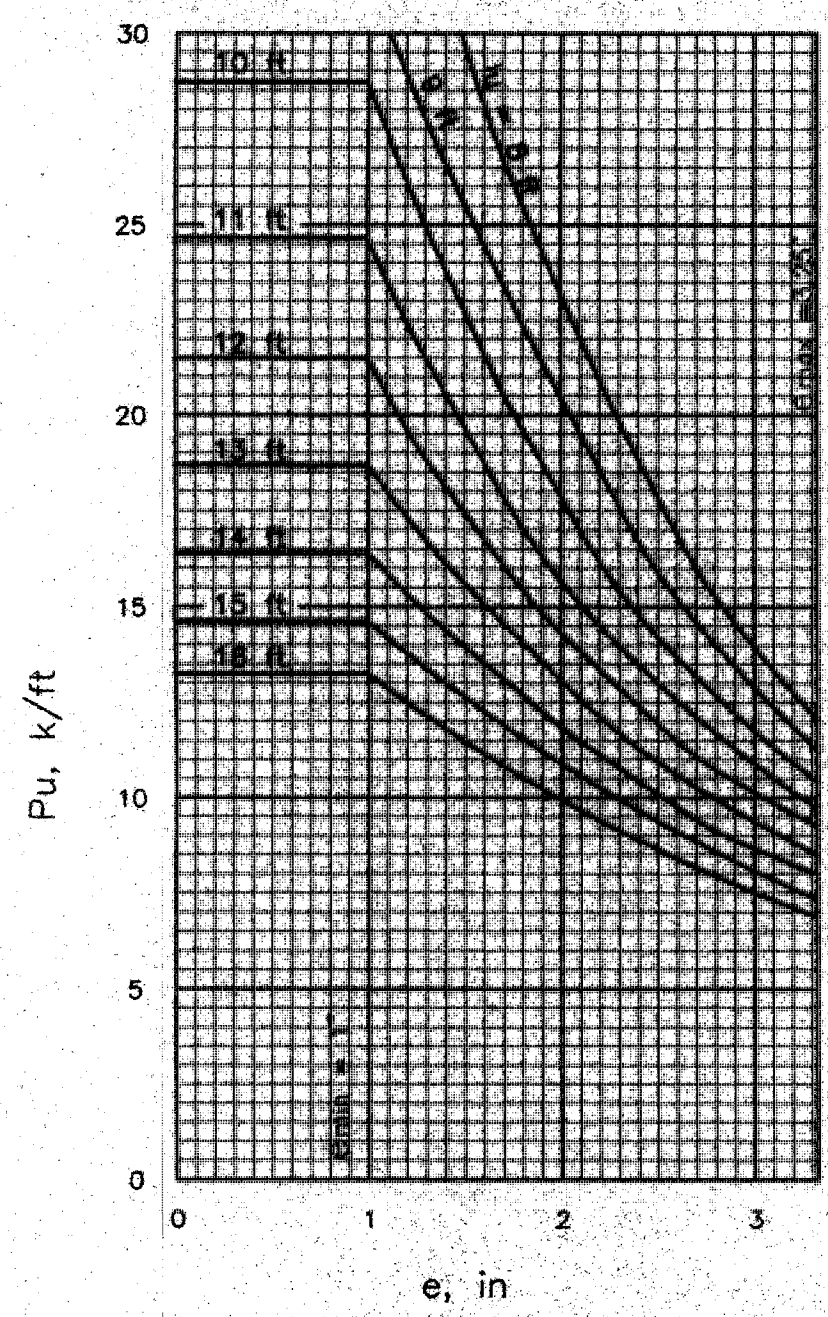

Structures with steel or wood floors or roofs.

$\beta_d = 0.3$

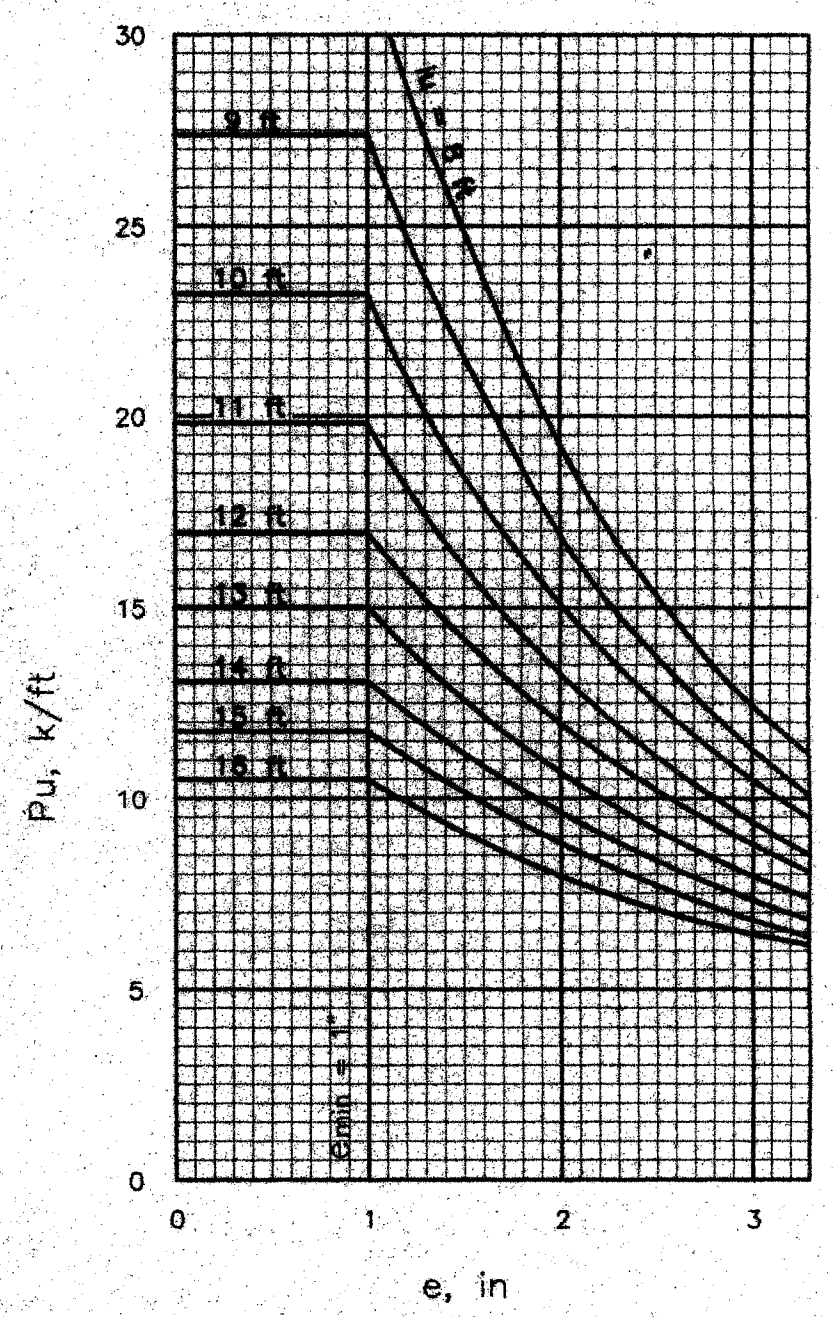

Structures with concrete floors or roofs.

$\beta_d = 0.7$

Concrete thickness	– 2 in. each side
Insulation thickness	– 2.5 in.
Wythe reinforcement	– 2 x 2 – W1.1 x W1.1 WWF
Diagonal wires	– W1.7–9 per sq. ft.

Use with Pu = 1.4D + 1.7L

Fig. D–4 Design Loads and Eccentricities

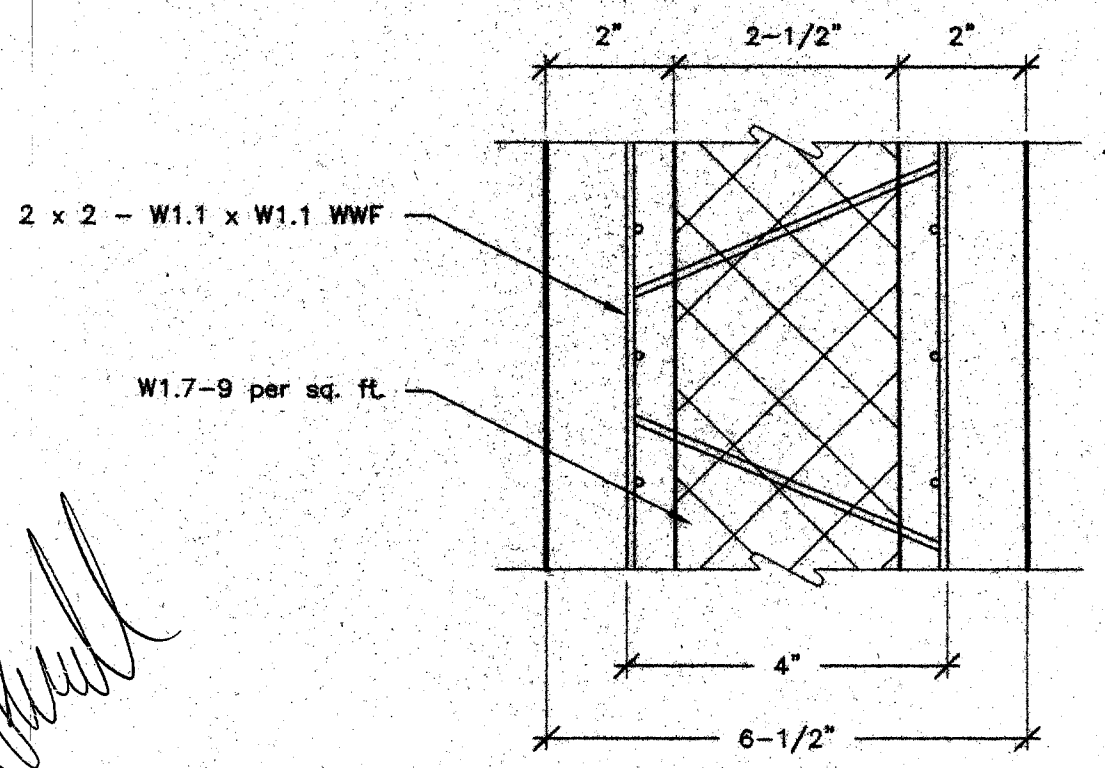

Figure 4

*Reference: "Structural Analysis of Insteel 3–D Wall Panels"
by
The Consulting Engineers Group – May 1989
Last Revised August 1989

PRODUCT RENEWED
ACCEPTANCE No. 01-0614.07
EXPIRATION DATE 06/14/2006
By Helmy A. Mahr
PRODUCT CONTROL DIVISION
BUILDING CODE COMPLIANCE OFFICE

APPROVED AS COMPLYING WITH THE SOUTH FLORIDA BUILDING CODE
DATE FEBRUARY 25 19 99
BY Helmy A. Mahr
PRODUCT CONTROL DIVISION
BUILDING CODE COMPLIANCE OFFICE
ACCEPTANCE NO. 98-0610.06

ICS 3–D PANEL WORKS, Inc.
2610 SIDNEY LANIER DRIVE
BRUNSWICK, GEORGIA 31525
912–264–3772

2–HR Rated 3–D Section

Roger C. Purcell, P.E.
Florida Registration No. 29361

1/13/95

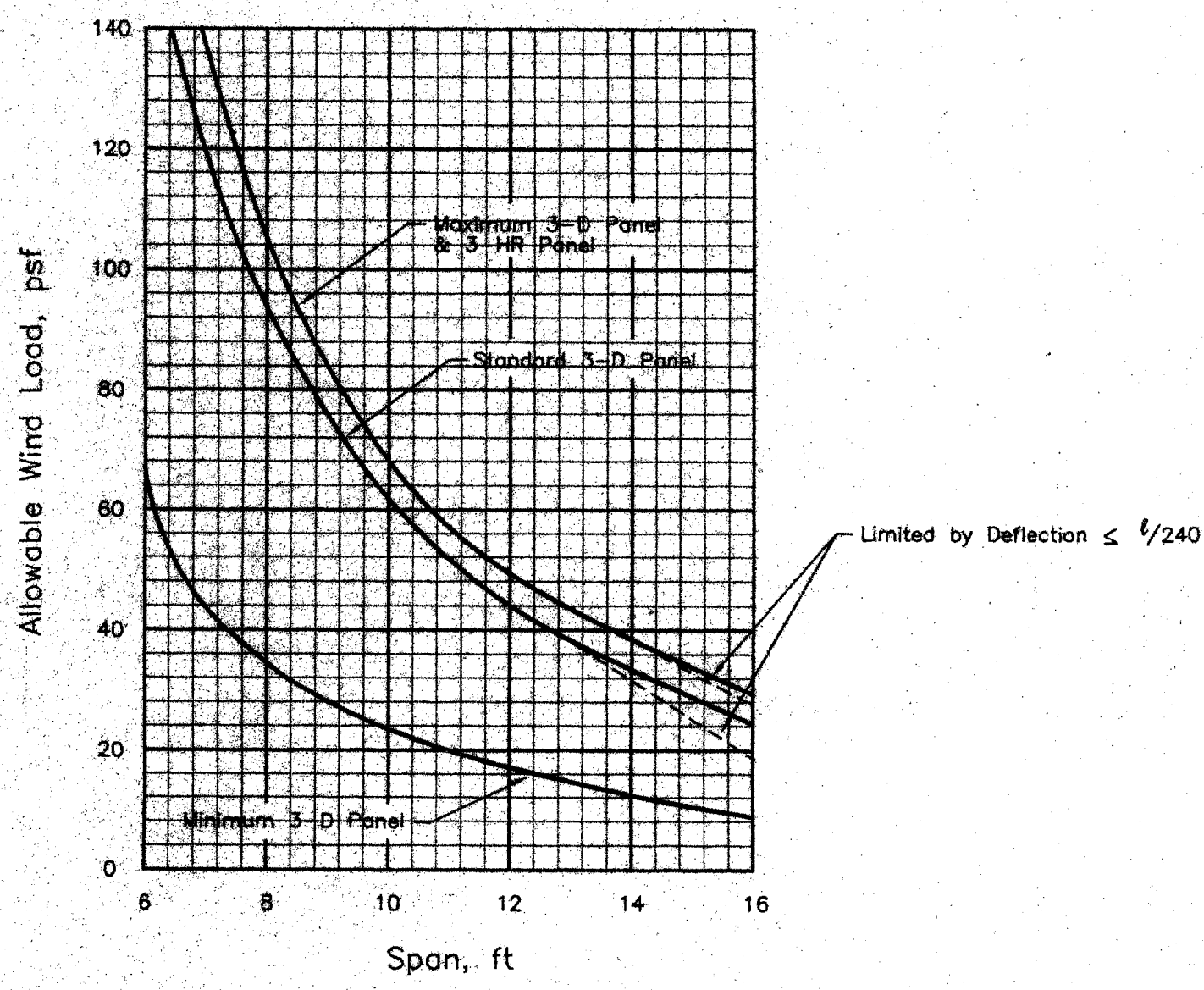

Figure D-5

PRODUCT RENEWED
ACCEPTANCE No. 01-0614.07
EXPIRATION DATE 06/14/2006
By Helmy A. Moker
PRODUCT CONTROL DIVISION
BUILDING CODE COMPLIANCE OFFICE

APPROVED AS COMPLYING WITH THE SOUTH FLORIDA BUILDING CODE
DATE FEBRUARY 25 1999
BY Helmy A. Moker
PRODUCT CONTROL DIVISION
BUILDING CODE COMPLIANCE OFFICE
ACCEPTANCE NO. 98-0610.06

*Reference: "Structural Analysis of Insteel 3-D Wall Panels"
by
The Consulting Engineers Group – May 1989
Last Revised August 1989

ICS 3-D PANEL WORKS, Inc. 2610 SIDNEY LANIER DRIVE BRUNSWICK, GEORGIA 31525 912-264-3772	Allowable Wind Loads on I.C.S. 3-D Panels	
	Roger C. Purcell, P.E. Florida Registration No. 29361 1/13/95	5 of 5

STRUCTURAL ANALYSIS OF
I.C.S. 3-D WALL PANELS

I. DESCRIPTION

The I.C.S. 3-D wall panel consist of a three-dimensional welded wire space frame integrated with a polystyrene insulation core. This reinforcement/insulation module is placed in position and wythes of concrete or mortar are applied to both sides. this is shown conceptually in Fig. 1.

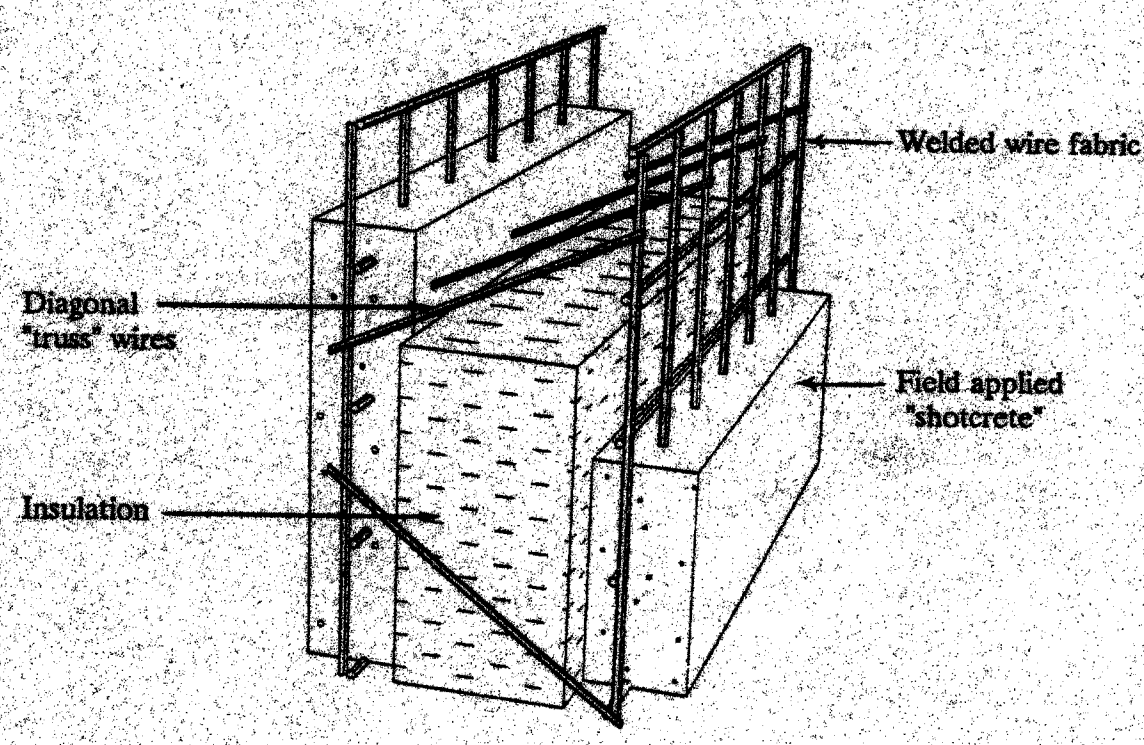

Fig. 1. The I.C.S. 3-D Wall Panel

The 3-D wall panel receives its strength and rigidity by the diagonal cross wires welded to the welded wire fabric on each side. This produces truss behavior which is very rigid and provides adequate shear transfer for full composite behavior.

The reinforcement/insulation module (RIM) is shop fabricated with highly automated equipment. This insures consistent dimensioonal control and high quality welding. Four different configurations of RIM are manufactured, as shown in Figs. 2, 3, 4 and 5. Fig. 2 shows the standard panel, which has 2 1/2 in. of insulation and a RIM thickness of 4 in. With 1 1/2 in. concrete wythes, the overall wall thickness is 5 1/2 in. This section is suitable for most applications.

PRODUCT RENEWED
ACCEPTANCE No. 01-0614.07
EXPIRATION DATE 06/14/2006
By Helmy A. Mekhail
PRODUCT CONTROL DIVISION
BUILDING CODE COMPLIANCE OFFICE

APPROVED AS COMPLYING WITH THE SOUTH FLORIDA BUILDING CODE
DATE FEBRUARY 25 1999
BY Helmy A. Mekhail
PRODUCT CONTROL DIVISION
BUILDING CODE COMPLIANCE OFFICE
ACCEPTANCE NO. 98-0610.06

NOTES:

1. ALL CONCRETE SHALL DEVELOPE A MINIMUM 28 DAY COMPRESSIVE STRENGTH OF 3000 PSI. CONCRETE FOR I.C.S. 3-D WALL PANELS SHALL BE PNEUMATICALLY PLACED (SHOTCRETE) AND SHALL CONFORM TO ALL REQUIREMENTS OF "SPECIFICATIONS FOR MATERIALS, PROPORTIONING AND APPLICATION OF SHOTCRETE" ACI-506.2.

2. REINFORCING STEEL SHALL BE IN ACCORDANCE WITH ASTM SPECIFICATION A-615, GRADE 60.

3. CONCRETE COVERAGE UNLESS OTHERWISE NOTED OR SHOWN:

   A. FOOTINGS — 3" FOR BOTTOM AND SIDES
   B. WALLS — 3/4" FOR SIDES

4. REINFORCING STEEL SHALL BE BENT, LAPPED AND SPLICED IN ACCORDANCE WITH ACI STANDARD DETAILS AND SPECIFICATIONS MINIMUM LAP = 1'-0".

5. THE SOIL CONDITIONS AT THIS SITE SHALL ADEQUATE TO SUPPORT A DESIGN LOAD OF 2000 PSF SHOULD OTHER CONDITIONS OR MATERIALS BE ENCOUNTERED, THE ARCHITECT OR ENGINEER SHALL BE NOTIFIED BEFORE PROCEEDING WITH WORK.

6. SEE ARCHITECTURAL PLANS FOR ALL INFORMATION NOT SHOWN.

7. ALL WOOD TRUSSES SHALL BE DESIGNED BY THE FABRICATOR, SHOP DRAWINGS BEARING THE SEAL OF AN ENGINEER REGISTERED IN THE STATE OF FLORIDA SHALL BE SUBMITTED TO THE ARCHITECT OF ENGINEER FOR APPROVAL PRIOR TO FABRICATION.

8. ALL WORK SHALL BE IN ACCORDANCE TO THE " SOUTH FLORIDA BUILDING CODE ".

9. FOAM PLASTIC SHALL COMPLY WITH SOUTH FLORIDA BUILDING CODE - 3505.2 MINIMUM SELF IGNITION - 650°F ASTM D1929 SMOKE DENSITY < 450 AND FLAME SPREAD < 75 ASTM E84.

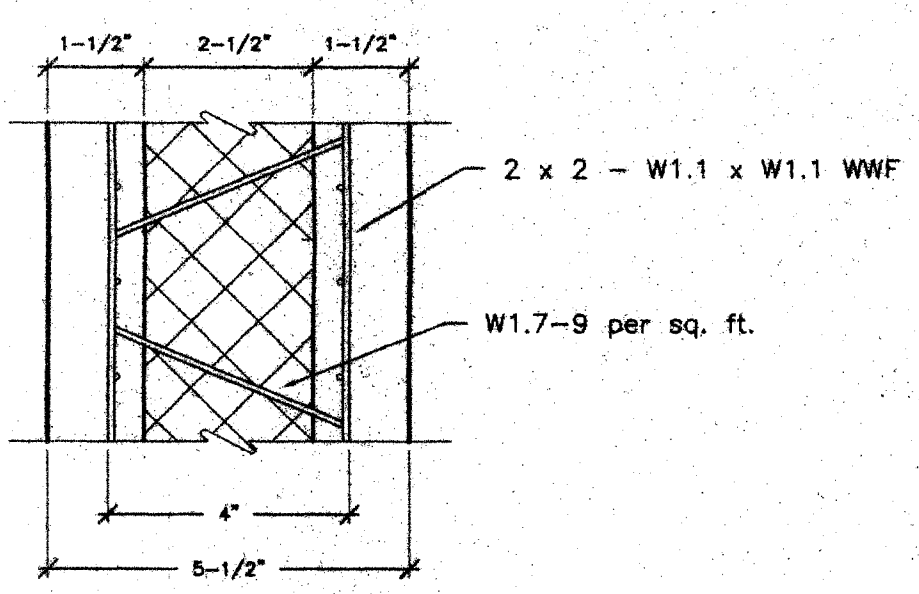

Figure 2. STANDARD 3-D SECTION

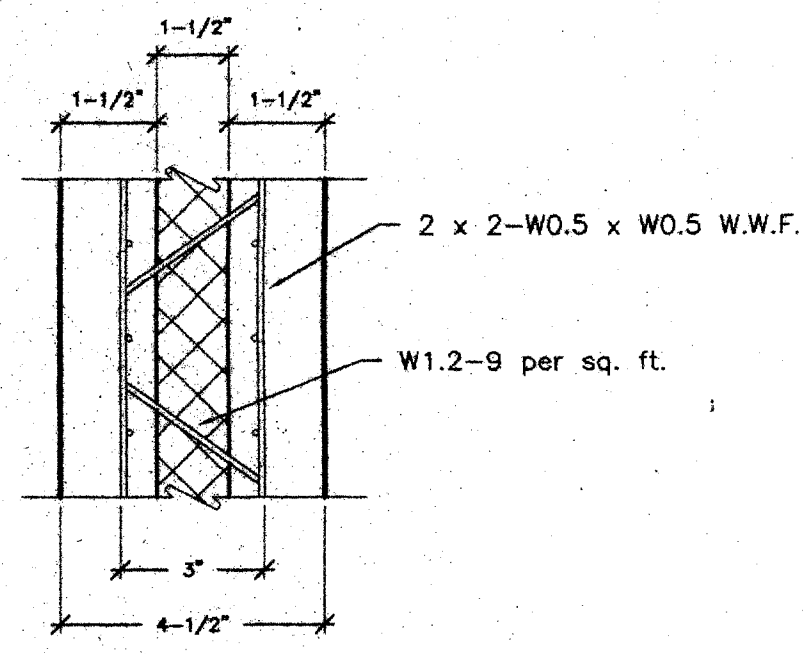

Figure 3. MINIMUM 3-D SECTION

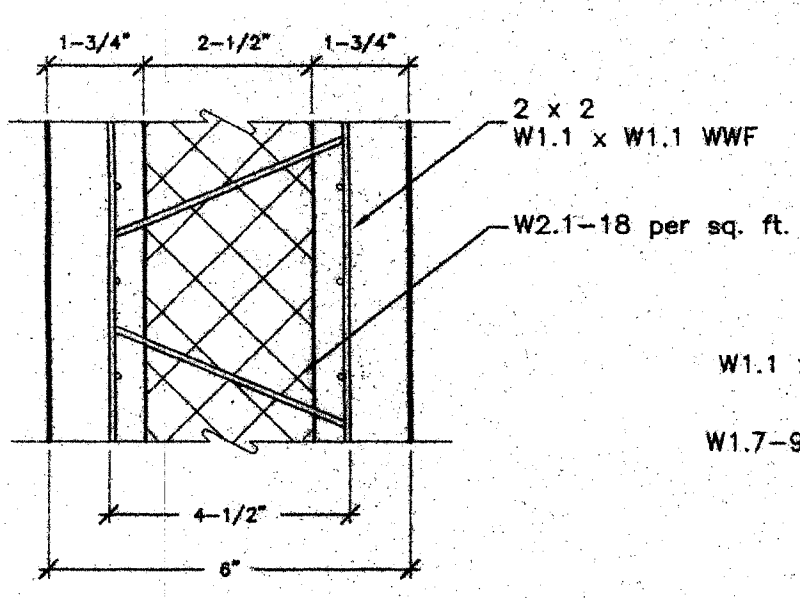

Figure 4. MAXIMUM 3-D SECTION

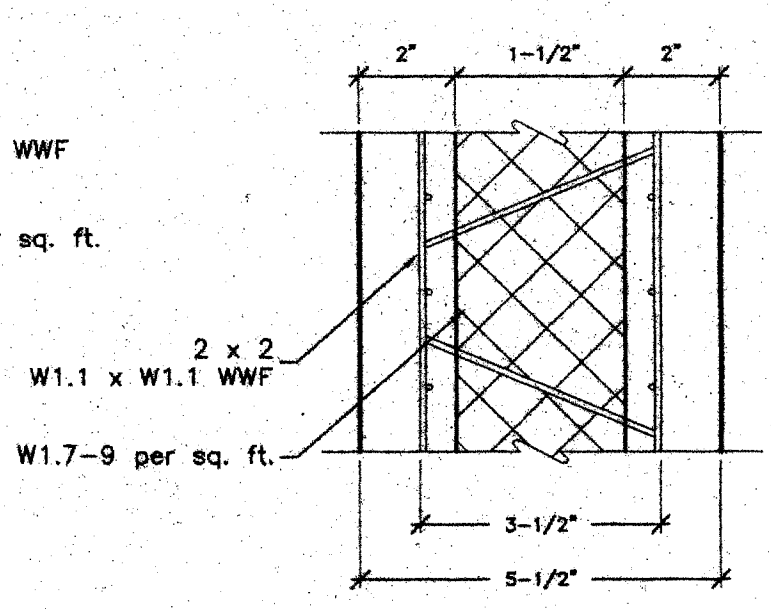

Figure 5. 2-HR RATED 3-D SECTION

PRODUCT RENEWED
ACCEPTANCE No. 01-0614.07
EXPIRATION DATE 06/14/2006
BY Helmy A. Mahr
PRODUCT CONTROL DIVISION
BUILDING CODE COMPLIANCE OFFICE

APPROVED AS COMPLYING WITH THE SOUTH FLORIDA BUILDING CODE
DATE February 25 1999
BY Helmy A. Mahr
PRODUCT CONTROL DIVISION
BUILDING CODE COMPLIANCE OFFICE
ACCEPTANCE NO. 98-0610.06

I.C.S. 3-D PANEL WORKS, Inc.
2610 SIDNEY LANIER DRIVE
BRUNSWICK, GEORGIA 31525
912-264-3772

I.C.S. 3-D WALL PANEL DETAILS

Roger C. Purcell, P.E.
Florida Registration No. 29361

04/10/95

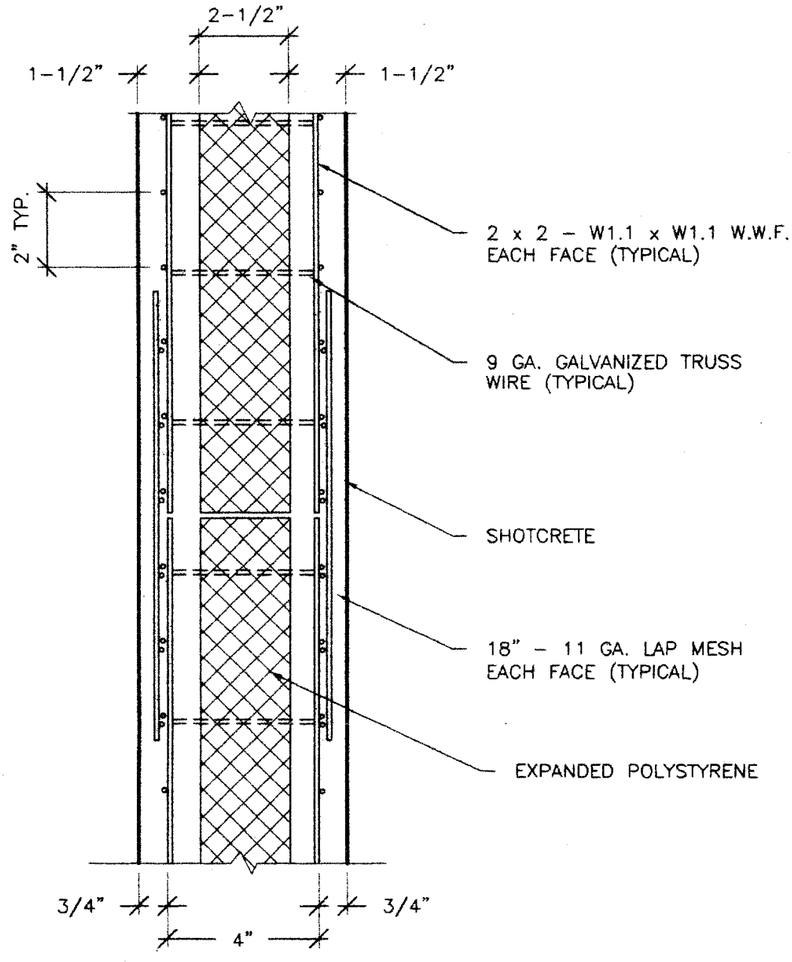

TYPICAL WALL SPLICE
(PLAN VIEW)

PRODUCT RENEWED
ACCEPTANCE No. 01-0614.07
EXPIRATION DATE 06/14/2006
By Helmy A. Mahr
PRODUCT CONTROL DIVISION
BUILDING CODE COMPLIANCE OFFICE

APPROVED AS COMPLYING WITH THE
SOUTH FLORIDA BUILDING CODE
DATE February 25 1999
BY Helmy A. Mahr
PRODUCT CONTROL DIVISION
BUILDING CODE COMPLIANCE OFFICE
ACCEPTANCE NO. 98-0610.06

Roger C. Purcell

I.C.S. 3-D PANEL WORKS, Inc.
2610 SIDNEY LANIER DRIVE
BRUNSWICK, GEORGIA 31525
912-264-3772

I.C.S. 3-D WALL PANEL DETAILS

Roger C. Purcell, P.E.
Florida Registration No. 29361 04/10/95

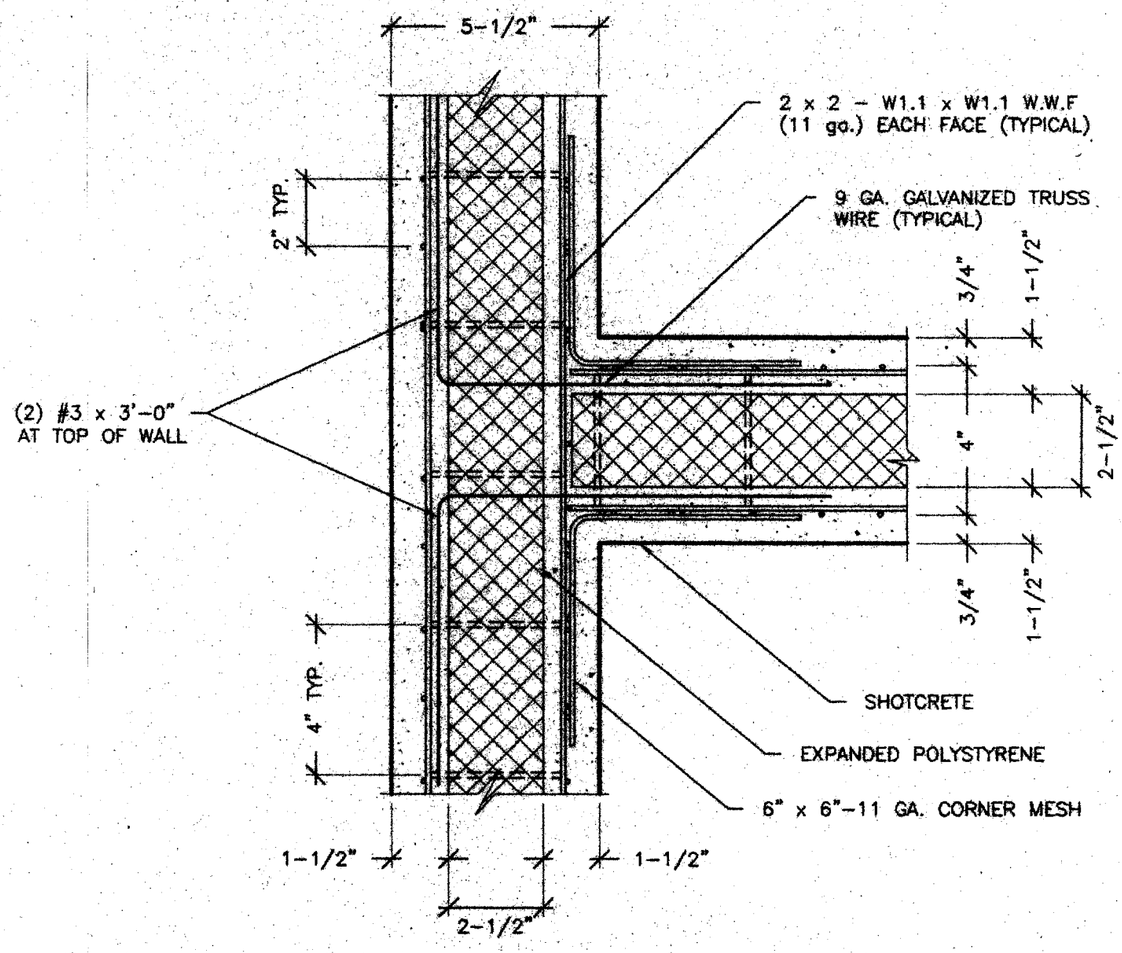

TYPICAL WALL INTERSECTION

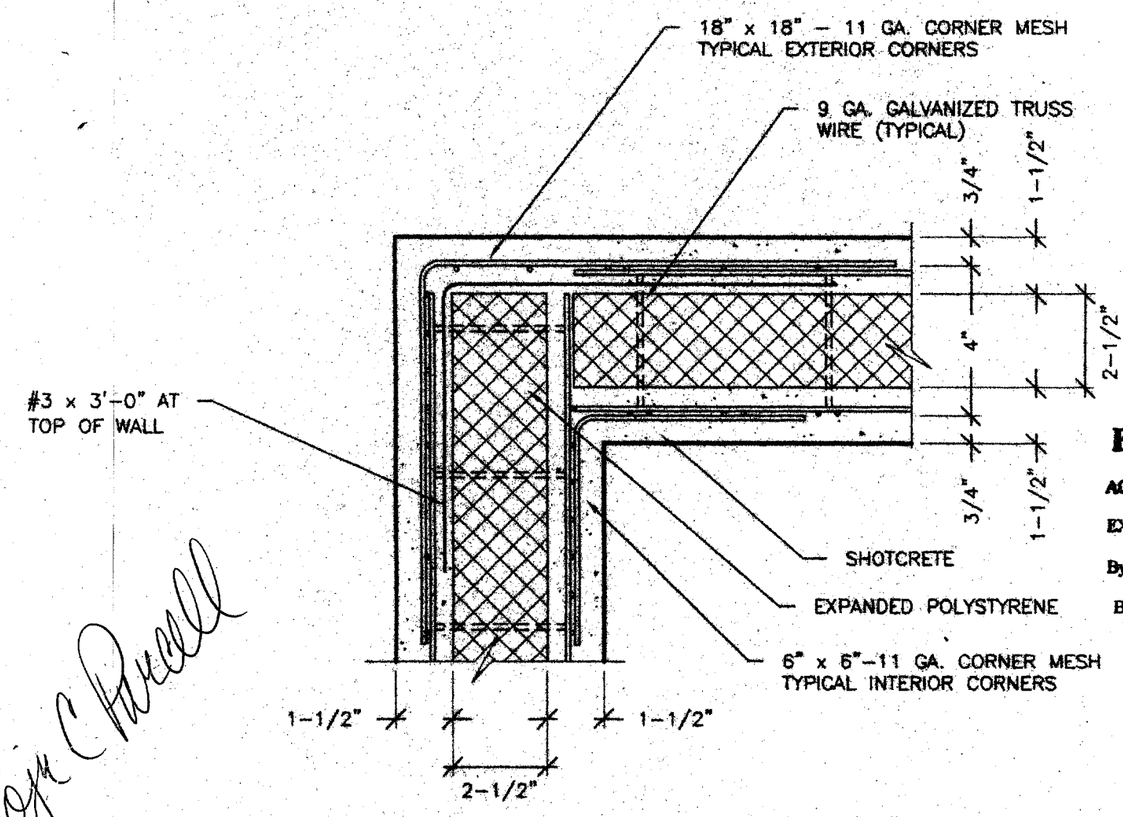

TYPICAL CORNER DETAIL

PRODUCT RENEWED
ACCEPTANCE No. 01-0614.07
EXPIRATION DATE 06/14/2006
By Helmy A. Mahr
PRODUCT CONTROL DIVISION
BUILDING CODE COMPLIANCE OFFICE

APPROVED AS COMPLYING WITH THE SOUTH FLORIDA BUILDING CODE
DATE February 25 1999
BY Helmy A. Mahr
PRODUCT CONTROL DIVISION
BUILDING CODE COMPLIANCE OFFICE
ACCEPTANCE NO. 98-0610.06

Roger C Purcell

I.C.S. 3-D PANEL WORKS, Inc. 2610 SIDNEY LANIER DRIVE BRUNSWICK, GEORGIA 31525 912-264-3772	I.C.S. 3-D WALL PANEL DETAILS Roger C. Purcell, P.E. Florida Registration No. 29361 04/10/95

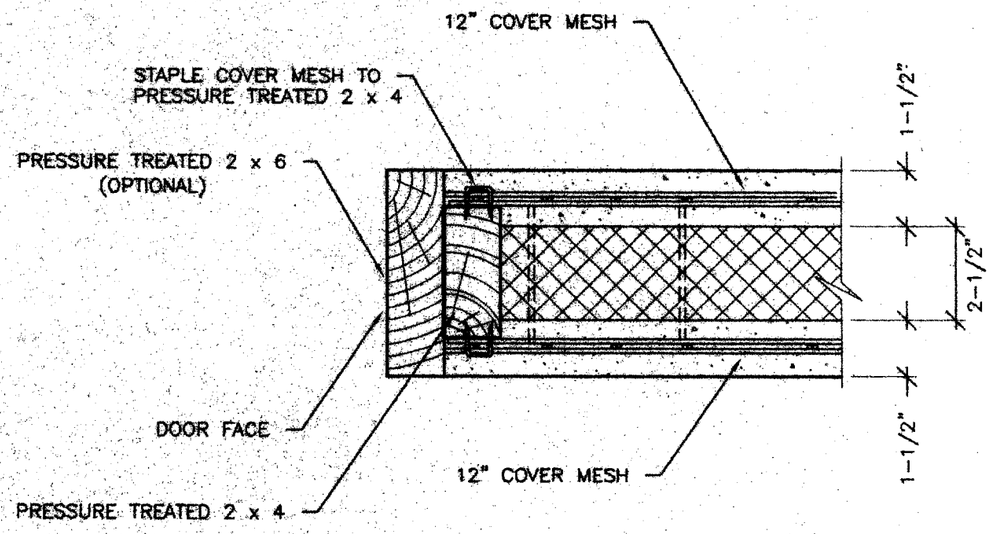

TYPICAL WINDOW / DOOR JAMB

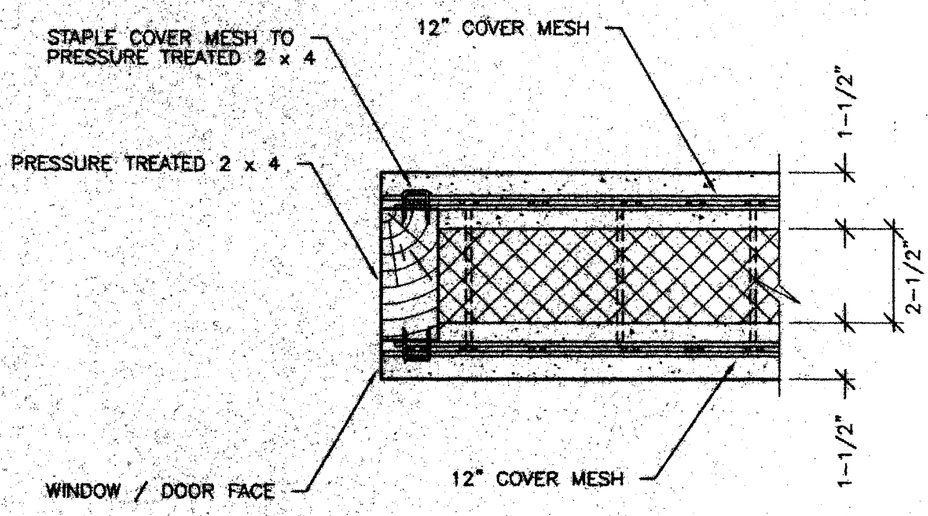

TYPICAL WINDOW / DOOR FRAME

PRODUCT RENEWED
ACCEPTANCE No. 01-0614.07
EXPIRATION DATE 06/14/2006
By Helmy A. Meher
PRODUCT CONTROL DIVISION
BUILDING CODE COMPLIANCE OFFICE

Roger C. Purcell

APPROVED AS COMPLYING WITH THE SOUTH FLORIDA BUILDING CODE
DATE FEBRUARY 25 1999
BY Helmy A. Meher
PRODUCT CONTROL DIVISION
BUILDING CODE COMPLIANCE OFFICE
ACCEPTANCE NO. 98-0610.06

I.C.S. 3-D PANEL WORKS, Inc.
2610 SIDNEY LANIER DRIVE
BRUNSWICK, GEORGIA 31525
912-264-3772

I.C.S. 3-D WALL PANEL DETAILS

Roger C. Purcell, P.E.
Florida Registration No. 29361 04/10/95

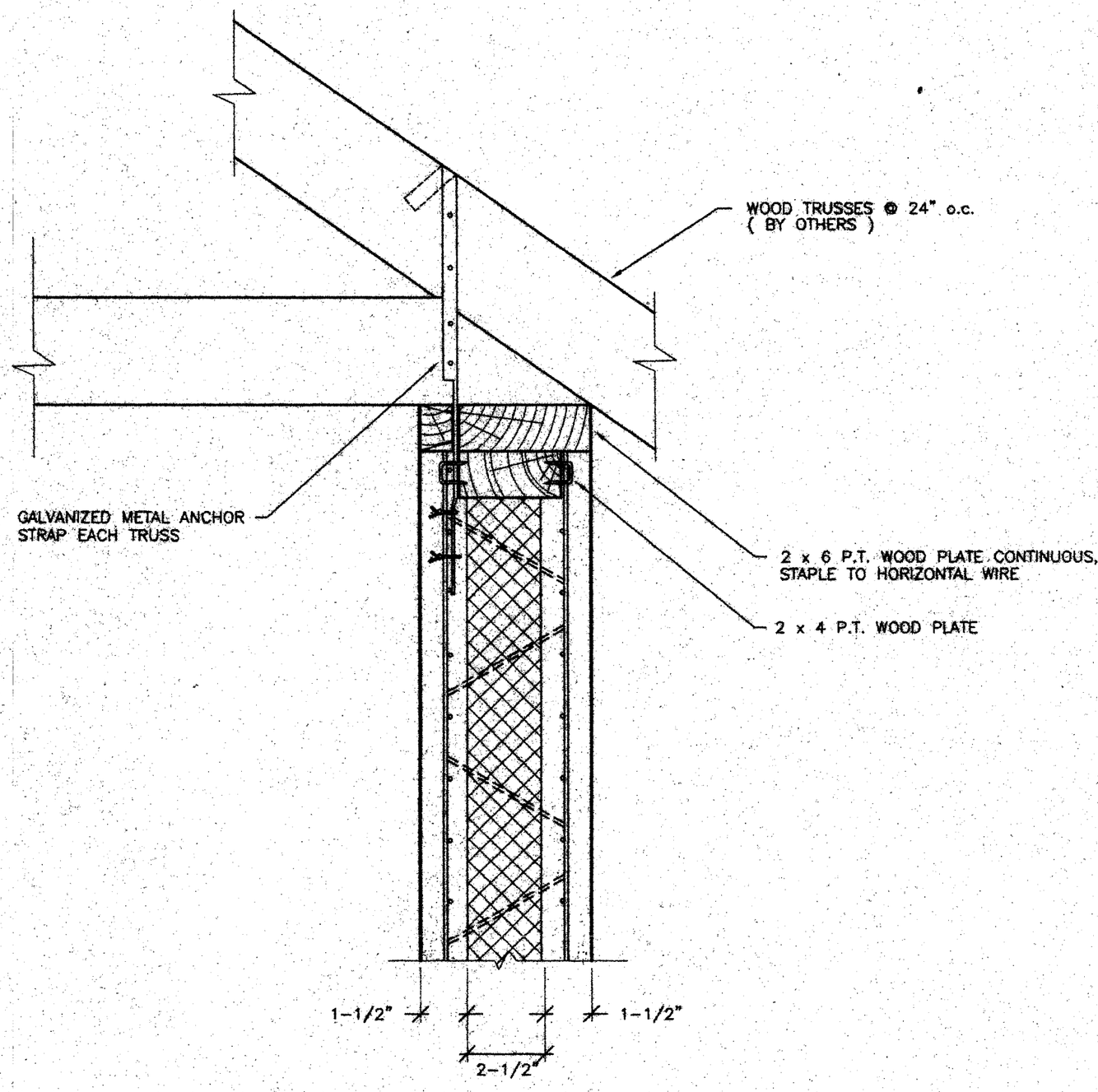

TYPICAL TRUSS SUPPORT

PRODUCT RENEWED
ACCEPTANCE No. 01-0614.07
EXPIRATION DATE 06/14/2006
By Helmy A. Mahar
PRODUCT CONTROL DIVISION
BUILDING CODE COMPLIANCE OFFICE

APPROVED AS COMPLYING WITH THE
SOUTH FLORIDA BUILDING CODE
DATE February 25 1999
BY Helmy A. Mahar
PRODUCT CONTROL DIVISION
BUILDING CODE COMPLIANCE OFFICE
ACCEPTANCE NO. 98-0610.06

I.C.S. 3-D PANEL WORKS, Inc.
2610 SIDNEY LANIER DRIVE
BRUNSWICK, GEORGIA 31525
912-264-3772

I.C.S. 3-D WALL PANEL DETAILS

Roger C. Purcell, P.E.
Florida Registration No. 29361 04/10/95

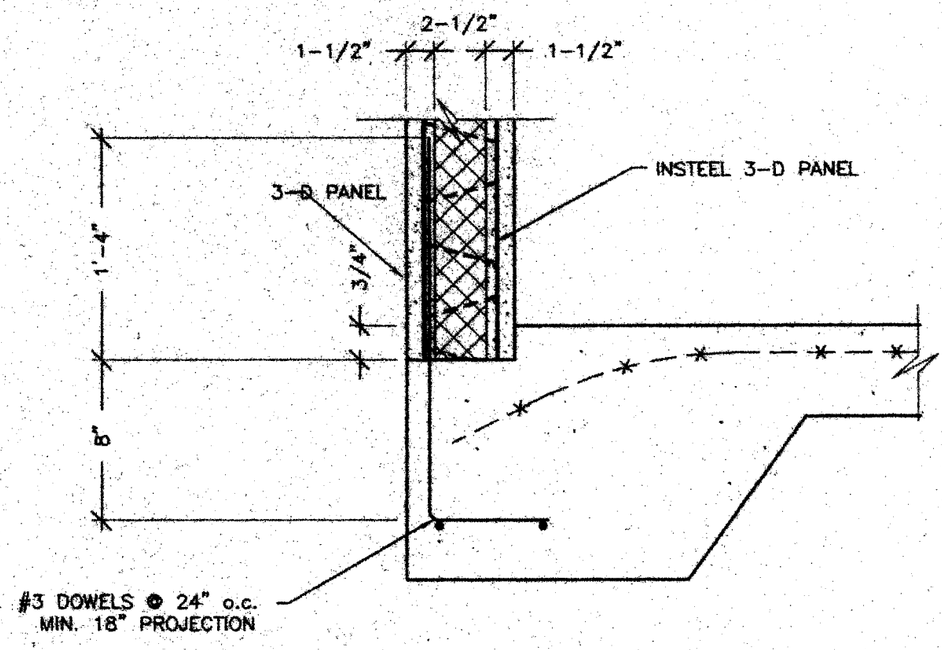

TYPICAL FOOTING WALL CONNECTION

PRODUCT RENEWED
ACCEPTANCE No. 01-0614.07
EXPIRATION DATE 06/14/2006
By Helmy A. Mak
PRODUCT CONTROL DIVISION
BUILDING CODE COMPLIANCE OFFICE

APPROVED AS COMPLYING WITH THE SOUTH FLORIDA BUILDING CODE
DATE February 25 1999
BY Helmy A. Mak
PRODUCT CONTROL DIVISION
BUILDING CODE COMPLIANCE OFFICE
ACCEPTANCE NO. 98-0610.06

I.C.S. 3-D PANEL WORKS, Inc.
2610 SIDNEY LANIER DRIVE
BRUNSWICK, GEORGIA 31525
912-264-3772

I.C.S. 3-D WALL PANEL DETAILS

Roger C. Purcell, P.E.
Florida Registration No. 29361
04/10/95