MIAMI-DADE

MIAMI-DADE COUNTY, FLORIDA
METRO-DADE FLAGLER BUILDING

BUILDING CODE COMPLIANCE OFFICE
METRO-DADE FLAGLER BUILDING
140 WEST FLAGLER STREET, SUITE 1603
MIAMI, FLORIDA 33130-1563
(305) 375-2901 FAX (305) 375-2908

CONTRACTOR LICENSING SECTION
(305) 375-2527 FAX (305) 375-2558

CONTRACTOR ENFORCEMENT DIVISION
(305) 375-2966 FAX (305) 375-2908

PRODUCT CONTROL DIVISION
(305) 375-2902 FAX (305) 372-6339

PRODUCT CONTROL NOTICE OF ACCEPTANCE

Petroleum Equipment & Manufacturing Co.
2185 W. 76 St.
Hialeah ,FL 33016

Your application for Notice of Acceptance (NOA) of:
SSA / (6.8" - HR) Aluminum Accordion Shutter
under Chapter 8 of the Code of Miami-Dade County governing the use of Alternate Materials and Types of Construction, and completely described herein, has been recommended for acceptance by the Miami-Dade County Building Code Compliance Office (BCCO) under the conditions specified herein.

This NOA shall not be valid after the expiration date stated below. BCCO reserves the right to secure this product or material at any time from a jobsite or manufacturer's plant for quality control testing. If this product or material fails to perform in the approved manner, BCCO may revoke, modify, or suspend the use of such product or material immediately. BCCO reserves the right to revoke this approval, if it is determined by BCCO that this product or material fails to meet the requirements of the South Florida Building Code.

The expense of such testing will be incurred by the manufacturer.

ACCEPTANCE NO.: 01-0614.08
EXPIRES: 08/10/2006

Raul Rodriguez
Chief Product Control Division

THIS IS THE COVERSHEET, SEE ADDITIONAL PAGES FOR SPECIFIC AND GENERAL CONDITIONS
BUILDING CODE & PRODUCT REVIEW COMMITTEE

This application for Product Approval has been reviewed by the BCCO and approved by the Building Code and Product Review Committee to be used in Miami-Dade County, Florida under the conditions set forth above.

Francisco J. Quintana, R.A.
Director
Miami-Dade County
Building Code Compliance Office

APPROVED: 08/10/2001

Petroleum Equipment Manufacturing Co., Inc.

ACCEPTANCE No. : 01-0614.08

APPROVED : 08/10/2001

EXPIRES : 08/10/2006

NOTICE OF ACCEPTANCE: STANDARD CONDITIONS

1. SCOPE

This approves an " 6.8" – HR" Aluminum Accordion Shutter, as described in Section 2 of this Notice of Acceptance, designed to comply with the South Florida Building Code, 1994 Edition for Miami-Dade County, for the locations where the pressure requirements, as determined by SFBC Chapter 23, do not exceed the Design Pressure Rating values indicated in the approved drawings.

2. PRODUCT DESCRIPTION

This " 6.8" – HR" Aluminum Accordion Shutter and its components shall be constructed in strict compliance with the following documents: Drawing No. 01-859, titled " 6.8 - HR Accordion Shutter", prepared by Knezevich & Associates, Inc., dated December 8, 1998, last revision #6 dated February 08, 2001, sheets 1 through 11 of 11, bearing the Miami-Dade County Product Control approval stamp with the Notice of Acceptance number and approval date by the Miami-Dade County Product Control Division. These documents shall hereinafter be referred to as the approved drawings.

3. LIMITATIONS

All permanent set components, included but not limited to embedded anchor bolts, threaded cones, metal shields, headers and sills, must be protected against corrosion, contamination and damage at all times.

4. INSTALLATION

This " 6.8" – HR" Aluminum Accordion Shutter and its components shall be installed in strict compliance with the approved drawings.

5. LABELING

Each unit shall bear a permanent label with the manufacturer's name or logo, city, state and the following statement: "Miami-Dade County Product Control Approved".

6. BUILDING PERMIT REQUIREMENTS

6.1 Application for building permit shall be accompanied by copies of the following:

6.1.1 This Notice of Acceptance.

6.1.2 Duplicate copies of the approved drawings, as identified in Section 2 of this Notice of Acceptance, clearly marked to show the components selected for the proposed installation.

6.1.3 Any other documents required by the Building Official or the South Florida Building Code (SFBC) in order to properly evaluate the installation of this system.

Helmy A. Makar, P.E.- Product Control Examiner
Product Control Division

Petroleum Equipment Manufacturing Co., Inc.

ACCEPTANCE No. : 01-0614.08

APPROVED : 08/10/2001

EXPIRES : 08/10/2006

NOTICE OF ACCEPTANCE: STANDARD CONDITIONS

1 Renewal of this Acceptance (approval) shall be considered after a renewal application has been filed and the original submitted documents, including test-supporting data, engineering documents, are no older than eight (8) years.

2. Any and all approved products shall be permanently labeled with the manufacturer's name, city, state, and the following statement: "Miami-Dade County Product Control Approved", or as specifically stated in the specific conditions of this Acceptance.

3. Renewals of Acceptance will not be considered if:
   a. There has been a change in the South Florida Building Code affecting the evaluation of this product and the product is not in compliance with the code changes.
   b. The product is no longer the same product (identical) as the one originally approved.
   c. If the Acceptance holder has not complied with all the requirements of this acceptance, including the correct installation of the product.
   d. The engineer, who originally prepared, signed and sealed the required documentation initially submitted, is no longer practicing the engineering profession.

4. Any revision or change in the materials, use, and/or manufacture of the product or process shall automatically be cause for termination of this Acceptance, unless prior written approval has been requested (through the filing of a revision application with appropriate fee) and granted by this office.

5. Any of the following shall also be grounds for removal of this Acceptance:
   a. Unsatisfactory performance of this product or process.
   b. Misuse of this Acceptance as an endorsement of any product, for sales, advertising or any other purposes.

6. The Notice of Acceptance number preceded by the words Miami-Dade County, Florida, and followed by the expiration date may be displayed in advertising literature. If any portion of the Notice of Acceptance is displayed, then it shall be done in its entirety.

7. A copy of this Acceptance as well as approved drawings and other documents, where it applies, shall be provided to the user by the manufacturer or its distributors and shall be available for inspection at the job site at all times. The engineer needs not reseal the copies.

8. Failure to comply with any section of this Acceptance shall be cause for termination and removal of Acceptance.

9. This Notice of Acceptance consists of pages 1, 2 and this last page 3.

END OF THIS ACCEPTANCE

Helmy A. Makar, P.E.- Product Control Examiner
Product Control Division

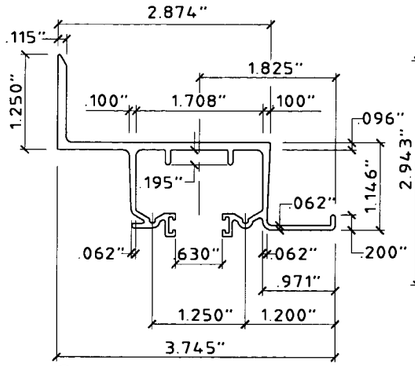

1 **WALL HEADER (6.8 ONLY)**
SCALE: HALF SIZE

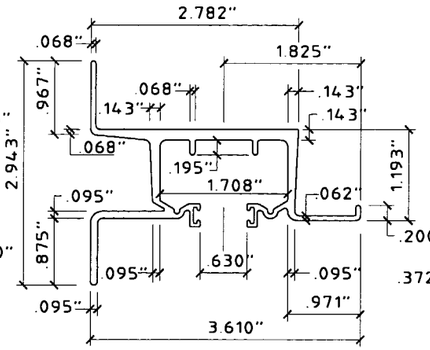

2 **WALL HEADER**
SCALE: HALF SIZE

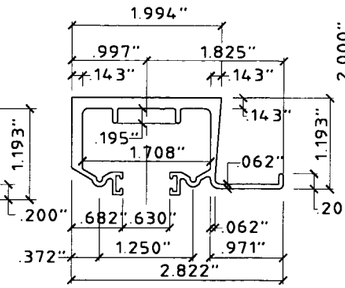

3 **HEADER**
SCALE: HALF SIZE

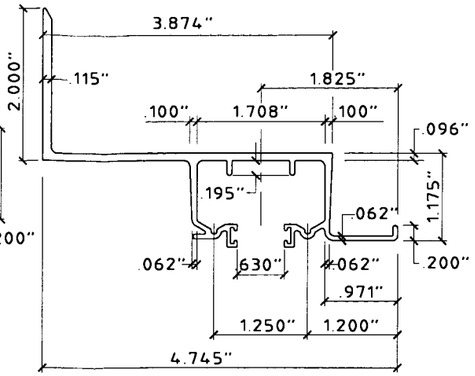

4 **BUILD OUT WALL HEADER (6.8 ONLY)**
SCALE: HALF SIZE

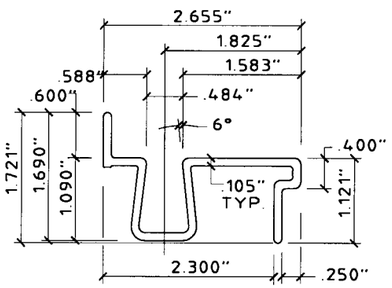

5 **BASE SILL**
SCALE: HALF SIZE

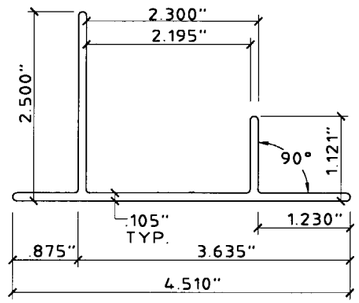

6 **BASE TRACK**
SCALE: HALF SIZE

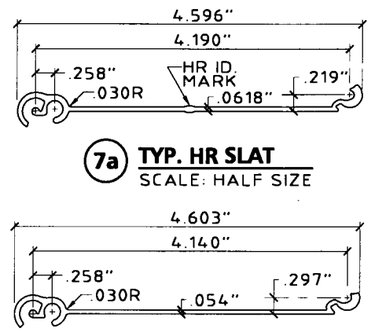

7a **TYP. HR SLAT**
SCALE: HALF SIZE

7 **TYP. 6.8 SLAT**
SCALE: HALF SIZE

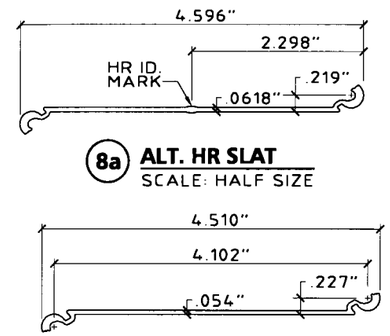

8a **ALT. HR SLAT**
SCALE: HALF SIZE

8 **ALT. 6.8 SLAT**
SCALE: HALF SIZE

GENERAL NOTES:

1. THESE ACCORDION SHUTTER SYSTEMS ARE DESIGNED IN ACCORDANCE WITH THE SOUTH FLORIDA BUILDING CODE, MIAMI-DADE COUNTY 1994 EDITION.
2. POSITIVE AND NEGATIVE DESIGN PRESSURE CALCULATIONS SHALL BE PERFORMED FOR SPECIFIC JOBS IN ACCORDANCE WITH ASCE 7-88 "MINIMUM DESIGN LOADS FOR BUILDINGS AND OTHER STRUCTURES". TABLES SHALL BE REFERENCED AT APPROPRIATE DESIGN LOADS.
3. ALL EXTRUSIONS SHOWN SHALL BE 6063-T6 ALUMINUM ALLOY, U.O.N., WITH A MINIMUM Fy OF 30.125 K.S.I.
4. EACH SHUTTER ASSEMBLY SHALL BE PERMANENTLY LABELED AT THE BOTTOM END OF THE LOCKING CENTERMATE OR SLAT AS FOLLOWS:
   PETROLEUM EQUIPMENT MANUFACTURING COMPANY, INC.
   HIALEAH, FLORIDA
   MIAMI-DADE COUNTY PRODUCT
   CONTROL APPROVED
5. ALL BOLTS AND WASHERS SHALL BE STAINLESS STEEL WITH A MINIMUM TENSILE STRENGTH OF 60 K.S.I., U.O.N. POP RIVETS SHALL BE 1/4"Ø OR 3/16"Ø 5052 ALUM. ALLOY.
6. ALL SHUTTERS SHALL HAVE A LOCKING MECHANISM CONSISTING OF THUMBSCREW OR PUSH LOCK AT CENTER OR SIDE CLOSURE.
7. THE DETAILS AND SPECIFICATIONS SHOWN HEREIN REPRESENT THE PRODUCTS TESTED FOR IMPACT, CYCLIC AND UNIFORM STATIC AIR PRESSURE IN CONFORMANCE W/ MIAMI-DADE COUNTY PROTOCOLS PA 201, 202, AND 203.
8. DESIGN IS BASED ON CONSTRUCTION TESTING CORPORATION (C.T.C.) TEST REPORTS No. 98-050 & No. 00-013.
9. TOP AND BOTTOM DETAILS MAY BE INTERCHANGED AS FIELD CONDITIONS REQUIRE.
10. FLOOR TRACKS MAY BE REMOVABLE AT NON-STACKING LOCATIONS. USE REMOVABLE ANCHORS SUCH AS POWERS CALK-IN ANCHORS.
11. THE PERMIT HOLDER SHALL VERIFY THE ADEQUACY OF THE EXISTING STRUCTURE TO SUSTAIN THE NEW SUPERIMPOSED LOADS AND TO VERIFY ALL DIMENSIONS AT THE JOB SITE BEFORE COMMENCING WITH THE WORK.
12. ALL EXTRUSIONS CAN BE USED FOR THE 6.8 OR THE HR ACCORDION SHUTTER SYSTEMS, U.O.N.
13. THE HR ACCORDION SHUTTER SLAT HAS A BULGE @ CENTER OF SLAT TO DISTINGUISH IT FROM THE 6.8 ACCORDION SHUTTER SLAT.

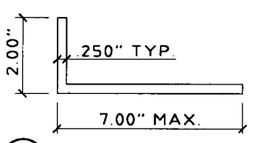

9a **ANGLE (HR ONLY)**
SCALE: 3" = 1' - 0"

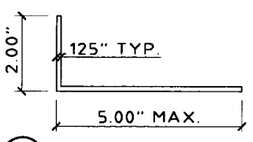

9 **ANGLE (6.8 ONLY)**
SCALE: 3" = 1' - 0"

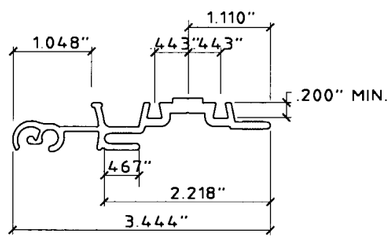

10 **MALE / FEMALE LOCK (6.8 ONLY)**
SCALE: HALF SIZE

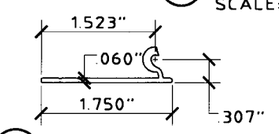

11a **HR STARTER**
SCALE: HALF SIZE

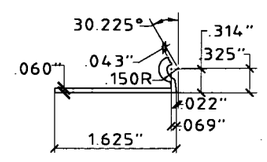

11 **6.8 STARTER**
SCALE: HALF SIZE

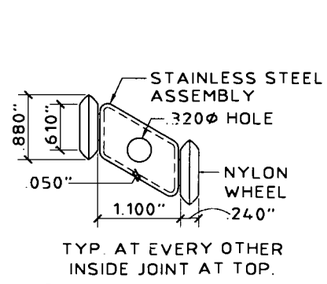

12 **ROLLER ASSEMBLY**
SCALE: HALF SIZE

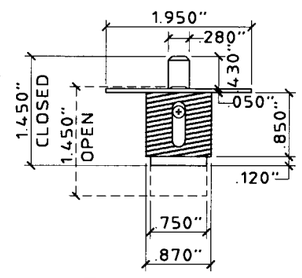

13 **BRASS PUSH LOCK**
SCALE: HALF SIZE

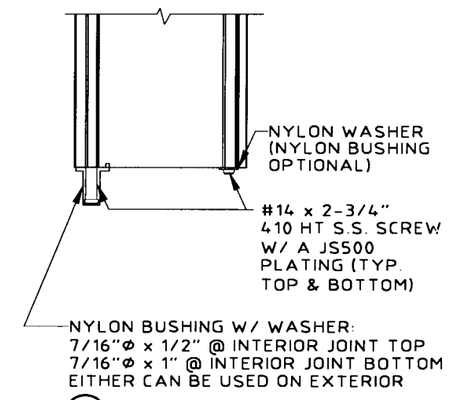

14 **BUSHING ASSEMBLY DETAIL**
SCALE: HALF SIZE

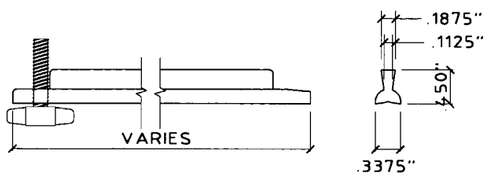

FOR 6.8 AND HR WHERE LOCK PINS ARE USED, THEY ARE ENGAGED IN THE STACKED POSITION AND ARE NOT REQ'D IN THE CLOSED POSITION.

15 **ALUMINUM OR PVC LOCK PIN (NOT REQUIRED)**
SCALE: HALF SIZE

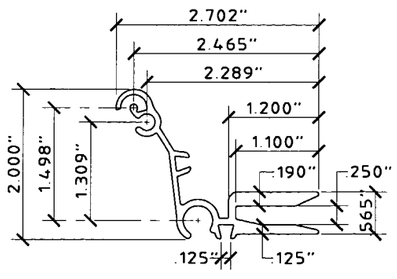

16 **CENTER MATE 1**
SCALE: HALF SIZE

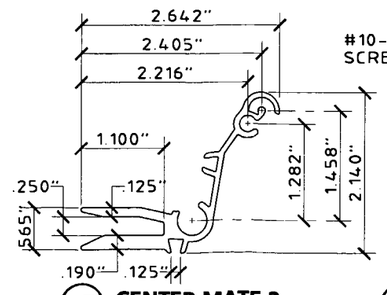

17 **CENTER MATE 2**
SCALE: HALF SIZE

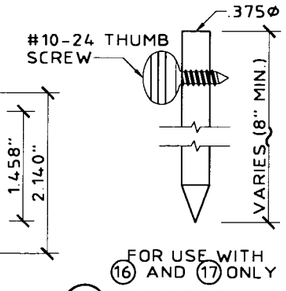

18 **SLIDE ROD**
SCALE: HALF SIZE

APPROVED AS COMPLYING WITH THE SOUTH FLORIDA BUILDING CODE
DATE 08/10/2001
BY Helmy A. Maher
PRODUCT CONTROL DIVISION
BUILDING CODE COMPLIANCE OFFICE
ACCEPTANCE NO. 01-0614.08

KNEZEVICH & ASSOCIATES, INC.
CONSULTING ENGINEERS • PRODUCT TESTING
1260 N. UNIVERSITY DRIVE, SUITE 180 • FORT LAUDERDALE, FL 33322
TEL: (954) 382-2800 • FAX: (954) 382-2989 • FLORIDA COA #3205
WEBSITE: WWW.KNEZEVICH.COM • E-MAIL: KA@KNEZEVICH.COM

COPYRIGHT © 2001 KNEZEVICH & ASSOCIATES, INC.

6.8/HR SYSTEM LICENSED BY SOUTHERN SHUTTER ASSOCIATION

6.8-HR ACCORDION SHUTTER

PEMCO
PETROLEUM EQUIPMENT MANUFACTURING COMPANY, INC.
2185 W. 76th STREET • HIALEAH, FL 33016
PHONE:(305) 558-9911 • FAX:(305) 558-8282

V.J. KNEZEVICH
PROFESSIONAL ENGINEER
FL License No: PE 0010983
MAY 25 2001

revisions

no	date	by	description
1	03/19/99	VJK	COUNTY COMMENTS
2	04/19/00	JWK	GENERAL REVISIONS
3	06/22/00	VJK	ADD HR ACCORDION SYSTEM
4	12/27/00	VJK	COUNTY COMMENTS
5	02/05/01	AS	GENERAL REVISIONS
6	02/08/01	AS	COUNTY COMMENTS

SSA I.D. #0524019825 4D

date 12/08/98	
scale AS NOTED	drawn by AV
design by VJK	checked by VJK
drawing no. 01-859	
sheet 1 of 11	

01-0614.08

6.8 ACCORDION SHUTTER

NOT APPLICABLE TO HR ACCORDION SHUTTER

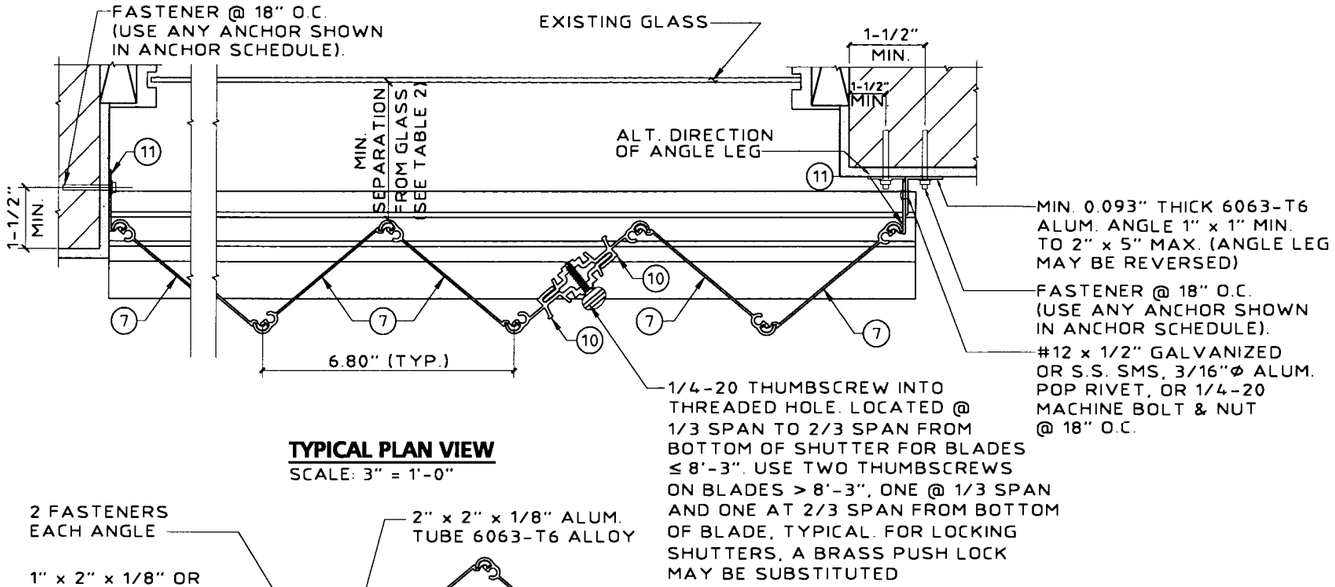

TYPICAL PLAN VIEW
SCALE: 3" = 1'-0"

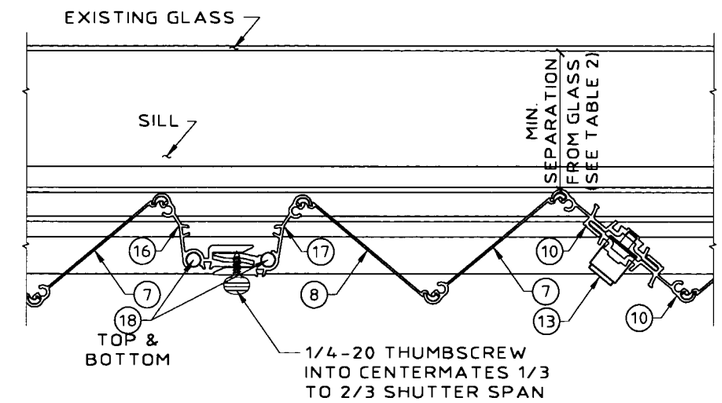

MULTIPLE SHUTTER ASSEMBLY
SCALE: 3" = 1'-0"

NOTE:
STARTER (11) LOCATION MUST BE ADJUSTED TO INSURE FULL DEPLOYMENT OF SHUTTER AND COMPLETE INTERLOCKING OF ADJACENT BLADES.

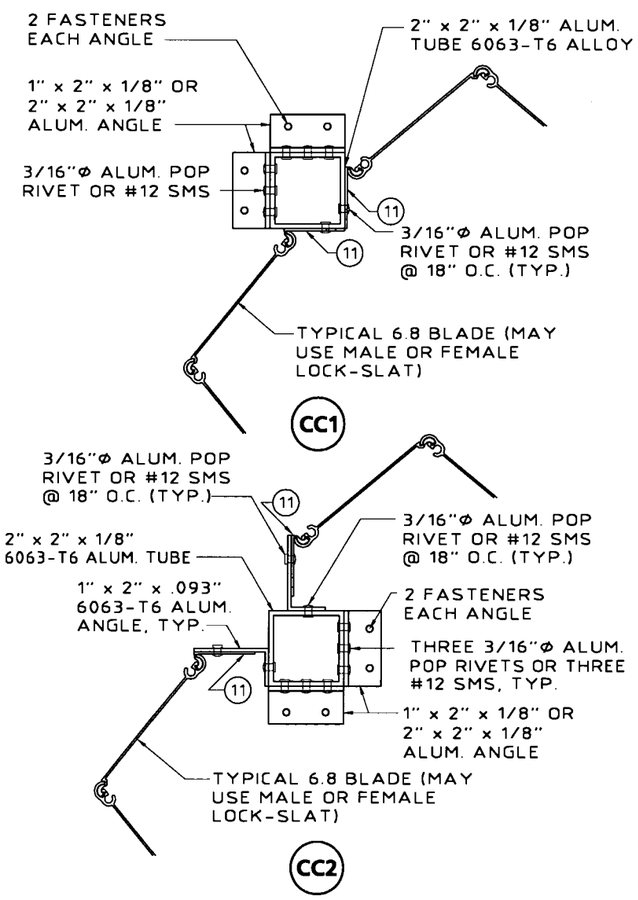

TYPICAL CORNER CLOSURE DETAILS
SCALE: 3" = 1'-0"

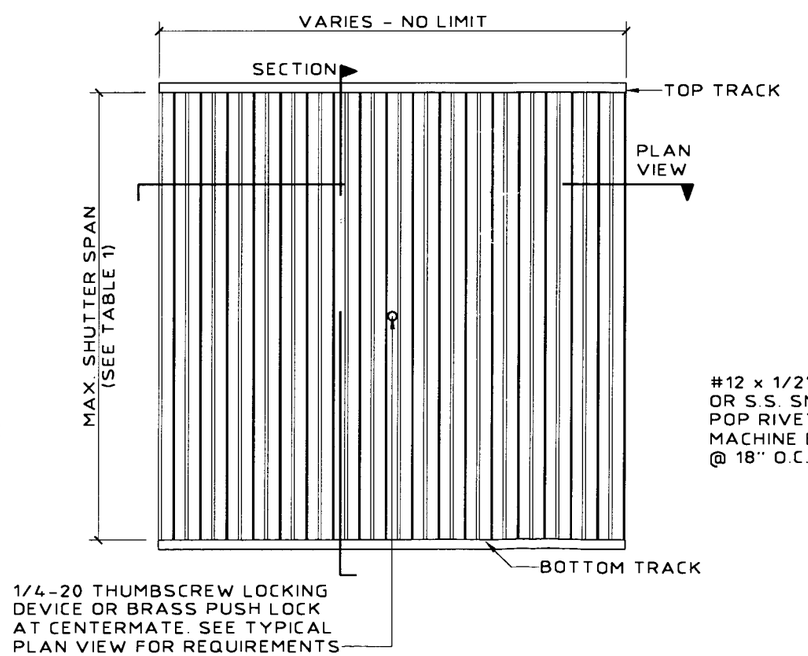

TYPICAL ELEVATION
N.T.S.

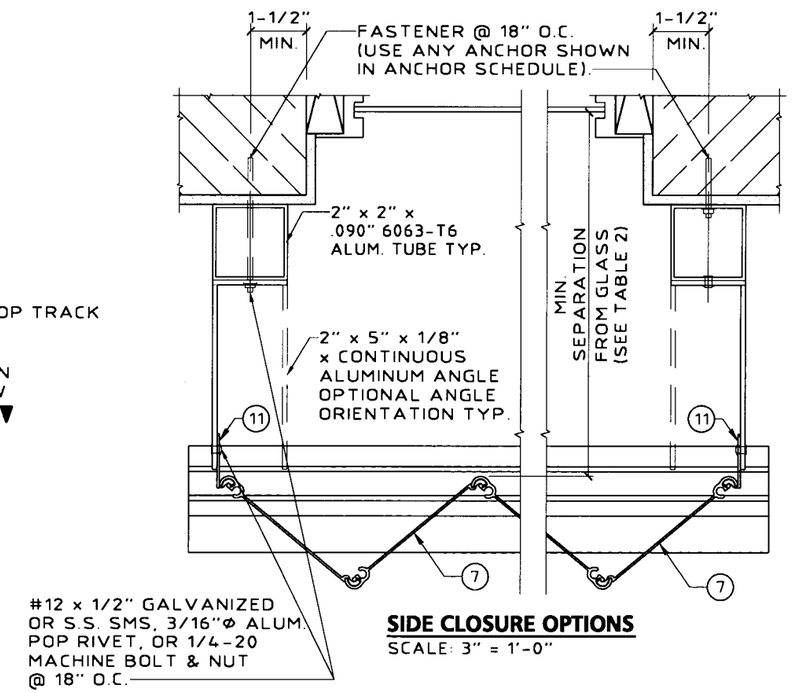

SIDE CLOSURE OPTIONS
SCALE: 3" = 1'-0"

APPROVED AS COMPLYING WITH THE SOUTH FLORIDA BUILDING CODE
DATE 08/10/2001
BY [signature]
PRODUCT CONTROL DIVISION
BUILDING CODE COMPLIANCE OFFICE
ACCEPTANCE NO. 01-0614.08

KNEZEVICH & ASSOCIATES, INC.
CONSULTING ENGINEERS • PRODUCT TESTING
1260 N. UNIVERSITY DRIVE, SUITE 180 • FORT LAUDERDALE, FL 33322
TEL: (954) 382-2800 • FAX: (954) 382-2989 • FLORIDA COA #3205
WEBSITE: WWW.KNEZEVICH.COM • E-MAIL: KA@KNEZEVICH.COM

COPYRIGHT © 2001 KNEZEVICH & ASSOCIATES, INC.

6.8/HR SYSTEM LICENSED BY SOUTHERN SHUTTER ASSOCIATION

6.8-HR ACCORDION SHUTTER

PEMCO
PETROLEUM EQUIPMENT MANUFACTURING COMPANY, INC.
2185 W. 76th STREET • HIALEAH, FL 33016
PHONE:(305) 558-9811 • FAX:(305) 558-9282

V.J. KNEZEVICH
PROFESSIONAL ENGINEER
FL License No: PE 0010983
MAY 25 2001

revisions			
no	date	by	description
1	03/19/99	VJK	COUNTY COMMENTS
2	04/13/00	JWK	GENERAL REVISIONS
3	06/22/00	VJK	ADD HR ACCORDION SYSTEM
4	12/27/00	VJK	COUNTY COMMENTS
5	02/05/01	AS	GENERAL REVISIONS
6	02/08/01	AS	COUNTY COMMENTS

SSA I.D. #0524019825 4D

date 12/08/98	
scale AS NOTED	drawn by AV
design by VJK	checked by VJK
drawing no. 01-859	
sheet 2 of 11	

6.8 ACCORDION SHUTTER

NOT APPLICABLE TO HR ACCORDION SHUTTER

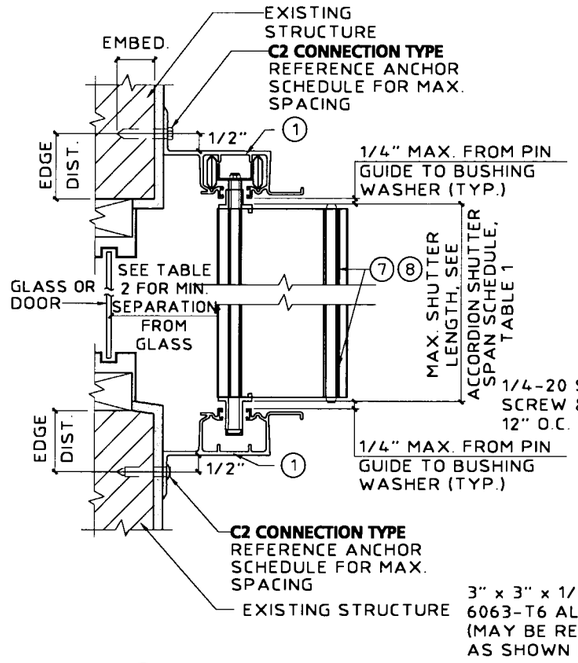

(A) WALL MOUNT SECTION
SCALE : 3"= 1'- 0"

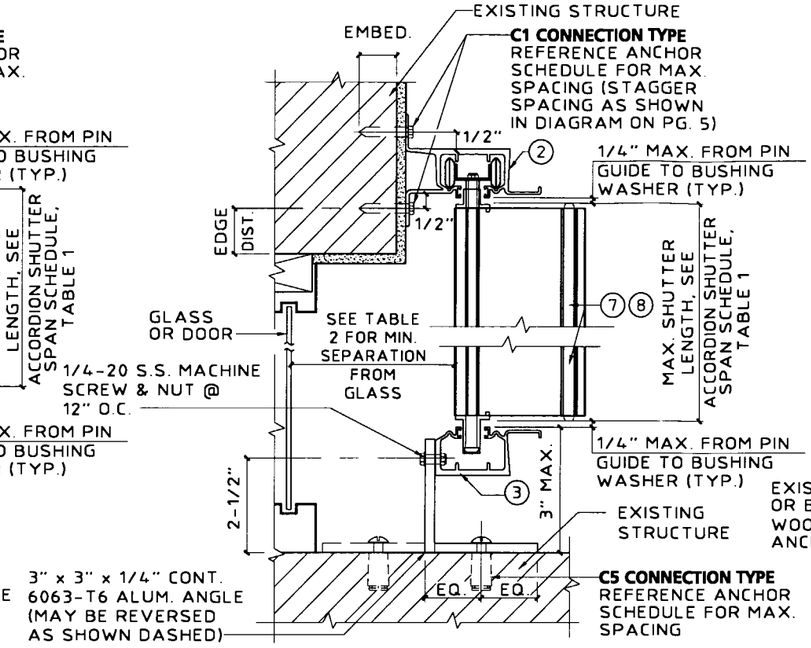

(B) WALL MOUNT SECTION
SCALE : 3"= 1'- 0"

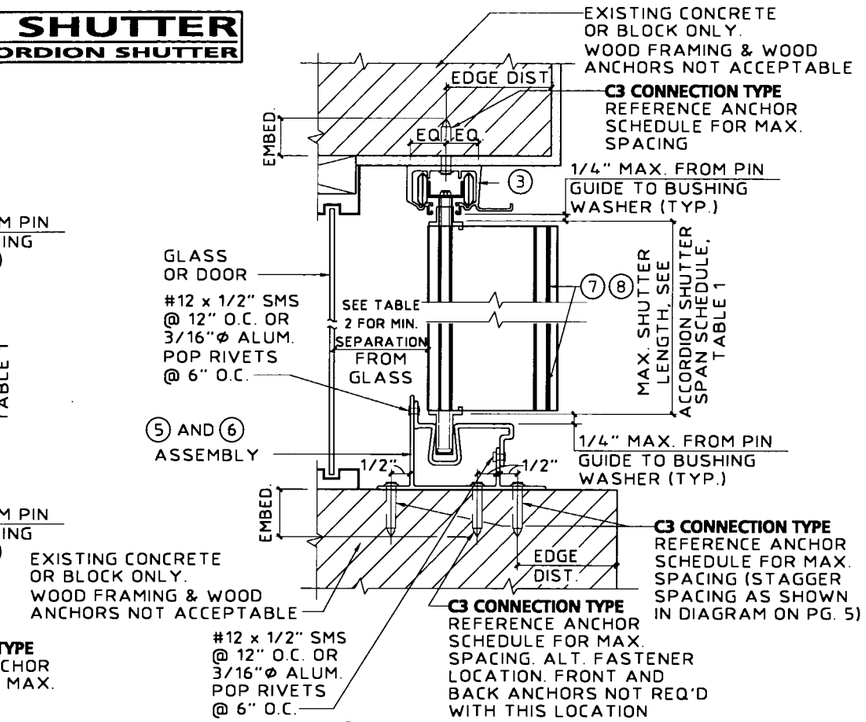

(C) CEILING / INSIDE MOUNT SECTION
SCALE : 3"= 1'- 0"

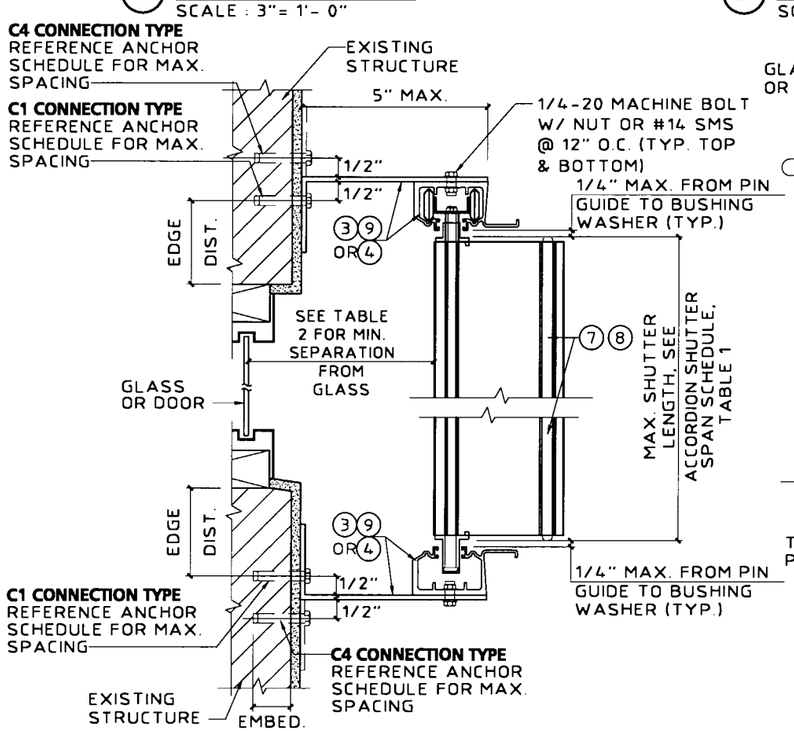

(D) BUILD OUT MOUNT SECTION
SCALE : 3"= 1'- 0"

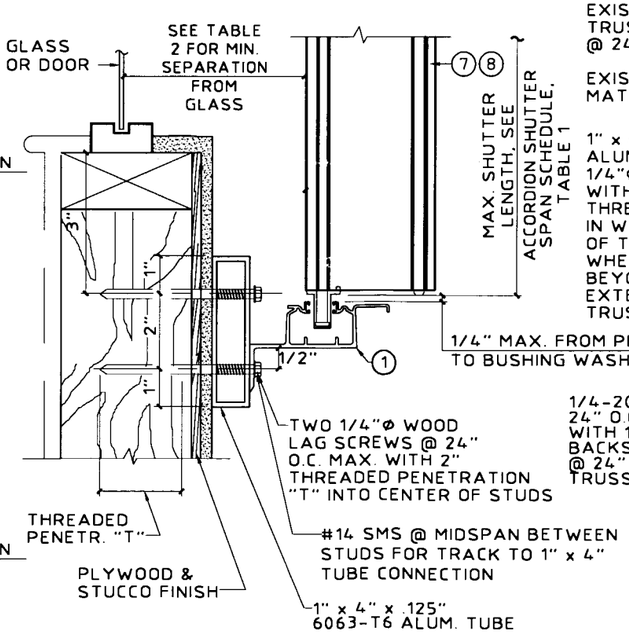

NOTE: THIS DETAIL MAY BE USED AT TOP

MAX. DESIGN LOAD = 72 P.S.F.

(E) WALL MOUNT SECTION
SCALE : 3"= 1'- 0"

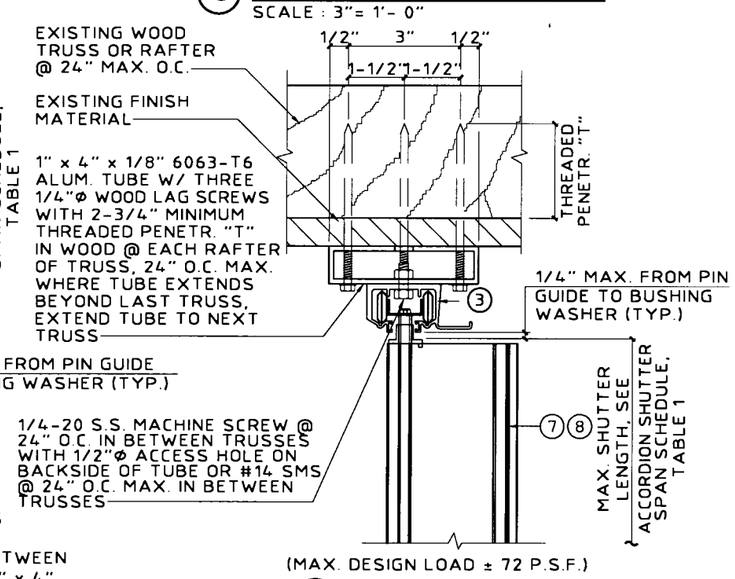

(MAX. DESIGN LOAD ± 72 P.S.F.)

(F) TRUSS MOUNT SECTION
SCALE : 3"= 1'- 0"

APPROVED AS COMPLYING WITH THE SOUTH FLORIDA BUILDING CODE
DATE 08/10/2001
BY [signature]
PRODUCT CONTROL DIVISION
BUILDING CODE COMPLIANCE OFFICE
ACCEPTANCE NO. 01-0614.08

KNEZEVICH & ASSOCIATES, INC.
CONSULTING ENGINEERS • PRODUCT TESTING
1260 N. UNIVERSITY DRIVE, SUITE 180 • FORT LAUDERDALE, FL 33322
TEL: (954) 382-2800 • FAX: (954) 382-2989 • FLORIDA COA #3205
WEBSITE: WWW.KNEZEVICH.COM • E-MAIL: KA@KNEZEVICH.COM

COPYRIGHT © 2001 KNEZEVICH & ASSOCIATES, INC.

6.8/HR SYSTEM LICENSED BY SOUTHERN SHUTTER ASSOCIATION

6.8-HR ACCORDION SHUTTER

PEMCO
PETROLEUM EQUIPMENT MANUFACTURING COMPANY, INC.
2185 W. 76th STREET • HIALEAH, FL 33016
PHONE:(305) 558-9911 • FAX:(305) 558-8282

V.J. KNEZEVICH
PROFESSIONAL ENGINEER
FL License No: PE 0010983
MAY 25 2001

revisions

no	date	by	description
1	03/19/99	VJK	COUNTY COMMENTS
2	06/13/00	JWK	GENERAL REVISIONS
3	06/22/00	VJK	ADD HR ACCORDION SYSTEM
4	12/27/00	VJK	COUNTY COMMENTS
5	02/05/01	AS	GENERAL REVISIONS
6	02/08/01	AS	COUNTY COMMENTS

SSA I.D. #0524019825 4D

date 12/08/98
scale AS NOTED
drawn by AV
design by VJK
checked by VJK
drawing no. 01-859
sheet 3 of 11

6.8 ACCORDION SHUTTER

NOT APPLICABLE TO HR ACCORDION SHUTTER

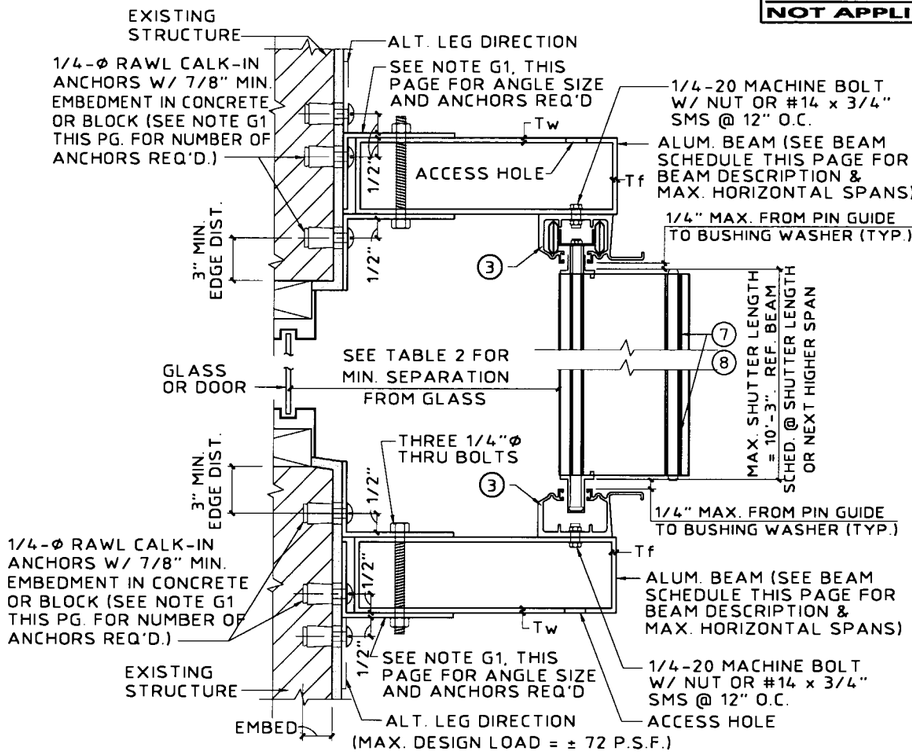

G BUILD-OUT MOUNT SECTION

SCALE : 3"= 1'- 0"

* BEAM SCHEDULE

DESCRIPTION	SHUTTER SPAN	BOTTOM BEAM	TOP BEAM
2" x 5" Tw = .125" Tf = .125"	5'-0"	9'-5"	9'-0"
	8'-0"	8'-1"	8'-0"
	10'-3"	7'-4"	7'-4"
2" x 7" Tw = .072" Tf = .130"	5'-0"	11'-4"	8'-5"
	8'-0"	9'-8"	7'-6"
	10'-3"	8'-9"	7'-0"
2" x 9" Tw = .072" Tf = .224"	5'-0"	15'-5"	9'-4"
	8'-0"	13'-2"	8'-4"
	10'-3"	11'-11"	7'-9"

*
USE BEAM SCHEDULE FOR DETAIL G.

TOP & BOTTOM BEAMS MAY BE USED TOGETHER OR IN COMBINATION WITH OTHER CONNECTION DETAILS. WHERE USED TOGETHER, BEAM MUST BE LIMITED TO TOP BEAM SPANS.

NOTE G1:

2" x 3" x 1/4" 6063-T6 ALUM. ANGLE TOP & BOTTOM. FOR 2" x 5" & 2" x 7" BEAM, USE THREE 1/4"Φ POWERS CALK-IN ANCHORS @ 3" O.C. IN EACH ANGLE AND USE 8" LONG ANGLES FOR 2" x 9" BEAM, USE FOUR 1/4"Φ CALK-IN ANCHORS @ 3" O.C. IN EACH ANGLE AND USE 11" LONG ANGLES

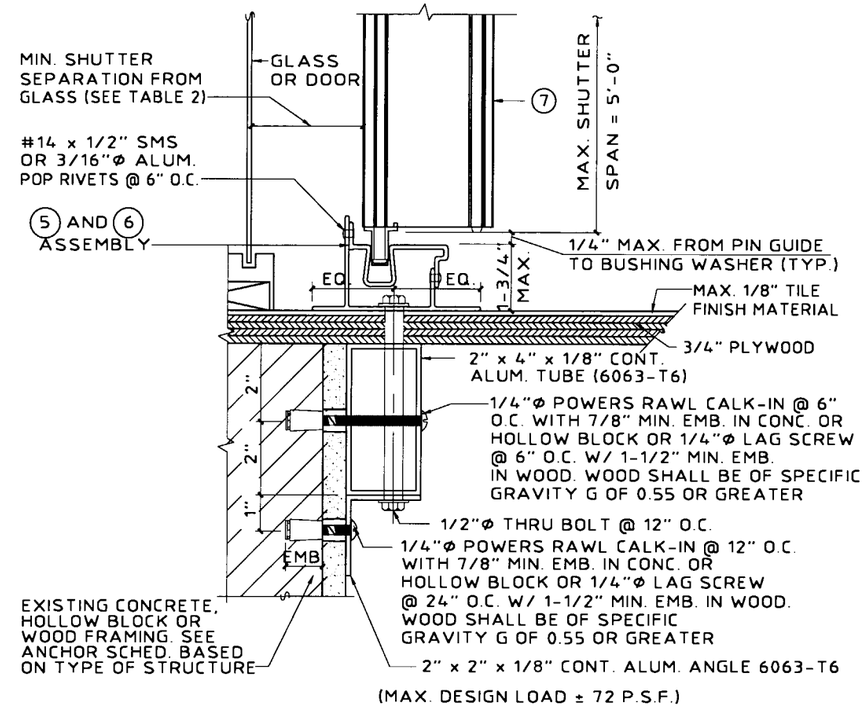

I PASS THRU DETAIL

SCALE : 3"= 1'- 0"

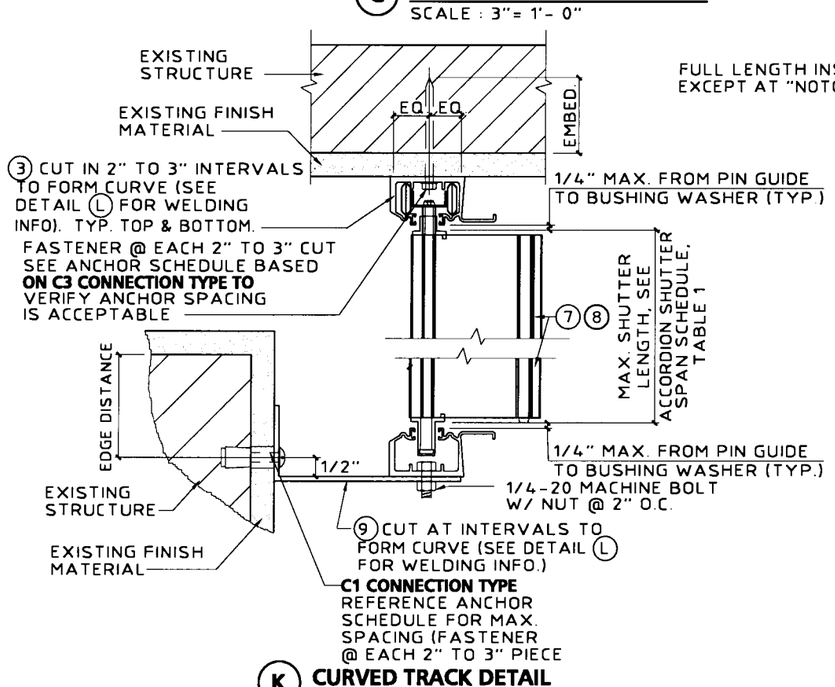

K CURVED TRACK DETAIL

SCALE : 3"= 1'- 0"

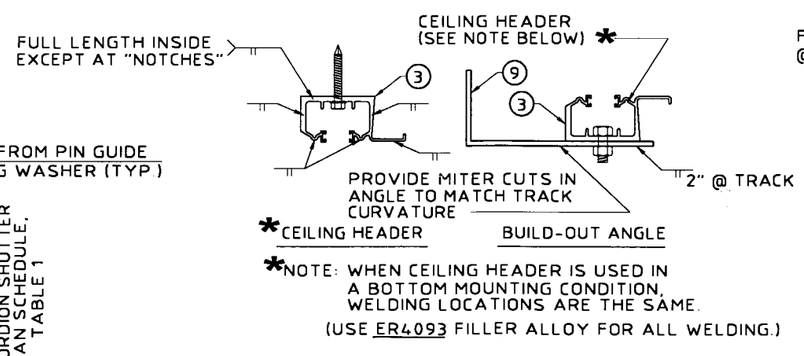

L WELDING DETAILS

SCALE : 3"= 1'- 0"

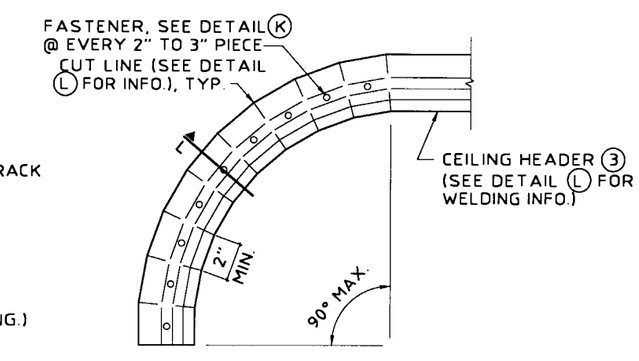

CURVED TRACK PLAN VIEW

N.T.S.

APPROVED AS COMPLYING WITH THE SOUTH FLORIDA BUILDING CODE
DATE 08/10/2001
BY [signature]
PRODUCT CONTROL DIVISION
BUILDING CODE COMPLIANCE OFFICE
ACCEPTANCE NO. 01-0614.08

KNEZEVICH & ASSOCIATES, INC.
CONSULTING ENGINEERS • PRODUCT TESTING
1260 N. UNIVERSITY DRIVE, SUITE 180 • FORT LAUDERDALE, FL 33322
TEL: (954) 382-2800 • FAX: (954) 382-2989 • FLORIDA COA #3205
WEBSITE: WWW.KNEZEVICH.COM • E-MAIL: KA@KNEZEVICH.COM

COPYRIGHT © 2001 KNEZEVICH & ASSOCIATES, INC

6.8/HR SYSTEM LICENSED BY SOUTHERN SHUTTER ASSOCIATION

6.8-HR ACCORDION SHUTTER

PEMCO
PETROLEUM EQUIPMENT MANUFACTURING COMPANY, INC.
2185 W. 76th STREET • HIALEAH, FL 33016
PHONE:(305) 558-9911 • FAX:(305) 558-8282

V.J. KNEZEVICH
PROFESSIONAL ENGINEER
FL License No: PE 0010983
MAY 25 2001

revisions

no	date	by	description
1	03/19/99	VJK	COUNTY COMMENTS
2	04/13/00	JWK	GENERAL REVISIONS
3	06/22/00	VJK	ADD HR ACCORDION SYSTEM
4	12/27/00	VJK	COUNTY COMMENTS
5	02/05/01	AS	GENERAL REVISIONS
6	02/08/01	AS	COUNTY COMMENTS

SSA I.D. #0524019825D

date 12/08/98
scale AS NOTED
drawn by AV
design by VJK
checked by VJK
drawing no. 01-859
sheet 4 of 11

6.8 ACCORDION SHUTTER

NOT APPLICABLE TO HR ACCORDION SHUTTER

ANCHOR SCHEDULE

FASTENER SPACING (INCHES) REQUIRED FOR VARIOUS DESIGN LOADS AND SPANS

EXISTING STRUCTURE	ANCHOR TYPE	LOAD (W) P.S.F. MAX. (SEE NOTE 1)	MIN. 2" EDGE DISTANCE															MIN. 3" EDGE DISTANCE													
			SPANS UP TO 6' - 0" (SEE NOTE 1)					SPANS UP TO 8' - 8" (SEE NOTE 1)					SPANS UP TO 12' - 10" (SEE NOTE 1)					SPANS UP TO 6' - 0" (SEE NOTE 1)					SPANS UP TO 8' - 8" (SEE NOTE 1)					SPANS UP TO 12' - 10" (SEE NOTE 1)				
			CONNECTION TYPE (SEE NOTE 3)					CONNECTION TYPE (SEE NOTE 3)					CONNECTION TYPE (SEE NOTE 3)					CONNECTION TYPE (SEE NOTE 3)					CONNECTION TYPE (SEE NOTE 3)					CONNECTION TYPE (SEE NOTE 3)				
			C1	C2	C3	C4	C5	C1	C2	C3	C4	C5	C1	C2	C3	C4	C5	C1	C2	C3	C4	C5	C1	C2	C3	C4	C5	C1	C2	C3	C4	C5
CONCRETE	1/4"Φ ITW OR ELCO TAPCON W/ 1-3/4" MIN. EMBEDMENT (MIN. 3,000 P.S.I. CONCRETE)	48.0	12	12	12	12	11	12	12	10	12	7	12	12	6	12	5	12	12	12	12	12	12	12	12	12	9	12	12	8	12	6
		62.0	12	12	11	12	8	12	12	7	12	5	12	8	5	10	4	12	12	12	12	10	12	12	10	12	7	12	9	6	12	4
		72.0	12	12	9	12	7	12	12	6	12	5	11	5	4	7	3	12	12	12	12	9	12	12	8	12	6	12	6	5	8	4
		110.0	12	12	6	12	4	10	5	4	7	3	9	3	3	5		12	12	8	12	5	12	5	5	8	4	10	4	4	6	3
		200.0	9	3	3	5		9	3	3	5		9	3	3	5		10	4	4	6	3	10	4	4	6	3	10	4	4	6	3
	* 3/8"Φ POWERS RAWL DROP-IN & 3/8"Φ STAINLESS STEEL BOLT WITH 1-9/16" MIN. EMBEDMENT (MIN. 3,000 P.S.I. CONCRETE)	48.0																12	12	12	12	16	12	12	12	12	16	12	12	12	12	12
		62.0																12	12	12	12	16	12	12	12	12	14	12	12	12	12	9
		72.0																12	12	12	12	16	12	12	12	12	12	12	12	10	12	8
		110.0																12	12	12	12	11	12	12	10	12	7	12	9	8	12	6
		200.0																12	9	8	12	6	12	9	8	12	6	12	9	8	12	6
	* 1/4"Φ POWERS FASTENING CALK-IN W/ 7/8" EMBED. & 1/4-20 STAINLESS STEEL MACHINE SCREW (MIN. 3,000 P.S.I. CONCRETE)	48.0	12	12	12	12	12	12	12	10	12	8	12	12	7	12	5	12	12	12	12	12	12	12	12	12	12	12	12	11	12	8
		62.0	12	12	11	12	9	12	12	8	12	6	12	10	5	12	4	12	12	12	12	12	12	12	12	12	9	12	12	9	12	6
		72.0	12	12	10	12	8	12	12	7	12	5	12	7	4	10	3	12	12	12	12	12	12	12	11	12	8	12	8	7	12	5
		110.0	12	12	6	12	5	12	6	4	9	3	12	4	3	7	3	12	12	10	12	8	12	8	7	11	5	12	5	6	8	4
		200.0	12	4	3	7	3	12	4	3	7	3	12	4	3	7	3	12	5	6	8	4	12	5	6	8	4	12	5	6	8	4
	1/4"Φ ELCO CRETE FLEX W/ 1-3/4" MIN. EMBEDMENT (MIN. 3,300 P.S.I. CONCRETE)	48.0	12	12	12	12	12	12	12	12	12	12	12	12	11	12	8	12	12	12	12	12	12	12	12	12	12	12	12	12	12	11
		62.0	12	12	12	12	12	12	12	12	12	9	12	12	9	12	6	12	12	12	12	12	12	12	12	12	12	12	12	11	12	8
		72.0	12	12	12	12	12	12	12	11	12	8	12	8	7	12	5	12	12	12	12	12	12	12	12	12	10	12	10	10	12	7
		110.0	12	12	11	12	8	12	8	7	11	5	12	5	6	8	4	12	12	12	12	10	12	9	10	12	7	12	7	8	10	6
		200.0	12	5	6	8	4	12	5	6	8	4	12	5	6	8	4	12	7	8	10	6	12	7	8	10	6	12	7	8	10	6
HOLLOW CONCRETE BLOCK	1/4"Φ ITW OR ELCO TAPCON W/ 1-1/4" MIN. EMBEDMENT	48.0	12	12	8	12	5	10	10	5	10	3	7	7	3	7		12	12	9	12	6	11	11	6	11	4	7	7	4	7	3
		62.0	11	11	6	11	4	8	8	4	8	3	5	3		4		12	12	7	12	5	9	9	5	9	3	6	3	3	5	
		72.0	10	10	5	10	3	7	7	3	7		4			3		11	11	6	11	4	7	7	4	7	3	5		3	3	
		110.0	6	6	3	6		4			3		3					7	7	4	7		5		3	3		4				
		200.0	3					3					3					4					4					4				
	* 1/4"Φ POWERS FASTENING CALK-IN W/ 7/8" EMBED. & 1/4-20 STAINLESS STEEL MACHINE SCREW	48.0	12	12	8	12	6	12	12	6	12	4	9	9	4	9	3	12	12	12	12	9	12	12	9	12	6	11	11	6	11	4
		62.0	12	12	6	12	5	10	10	4	10	3	7	4	3	5		12	12	10	12	7	12	12	7	12	5	8	5	4	7	3
		72.0	12	12	5	12	4	9	9	4	9		6			4		12	12	9	12	6	11	11	6	11	4	7	3	4	5	
		110.0	8	8	3	8		5			3		5					10	10	5	10	4	7	3	4	4		6		3	3	
		200.0	5					5					5					6		3	3		6		3	3		6		3	3	
	1/4"Φ ELCO CRETE FLEX W/ 1-1/4" MIN. EMBEDMENT	48.0	12	12	12	12	11	12	12	11	12	7	12	12	7	12	5	12	12	12	12	11	12	12	11	12	8	12	12	7	12	5
		62.0	12	12	12	12	8	12	12	8	12	6	11	7	5	9	4	12	12	12	12	9	12	12	8	12	6	12	7	5	10	4
		72.0	12	12	10	12	7	12	12	7	12	5	9	4	4	6	3	12	12	10	12	7	12	12	7	12	5	10	5	5	7	3
		110.0	12	12	6	12	4	9	4	4	6	3	8	3	4	4		12	12	7	12	5	10	4	4	6	3	8	3	4	5	3
		200.0	8	3	4	4		8	3	4	4		8	3	4	4		8	3	4	5	3	8	3	4	5	3	8	3	4	5	3

ANCHOR SCHEDULE

FASTENER SPACING (INCHES) REQUIRED FOR VARIOUS DESIGN LOADS AND SPANS

EXISTING STRUCTURE	ANCHOR TYPE	LOAD (W) P.S.F. MAX. (SEE NOTE 1)	MIN. 3/4" EDGE DISTANCE														
			SPANS UP TO 6' - 0" (SEE NOTE 1)					SPANS UP TO 8' - 8" (SEE NOTE 1)					SPANS UP TO 12' - 10" (SEE NOTE 1)				
			CONNECTION TYPE (SEE NOTE 3)					CONNECTION TYPE (SEE NOTE 3)					CONNECTION TYPE (SEE NOTE 3)				
			C1	C2	C3	C4	C5	C1	C2	C3	C4	C5	C1	C2	C3	C4	C5
WOOD	T ≥1-3/4" 1/4"Φ WOOD LAG SCREW W/ MIN. 1-3/4" THREADED PENETRATION "T" SHEAR PARALLEL OR PERPENDICULAR TO WOOD GRAIN	48.0	12	12	10	12	8	12	12	7	12	6	12	12	4	12	4
		62.0	12	12	8	12	6	12	12	5	12	4	12	10	3	12	3
		72.0	12	12	7	12	5	12	12	4	12	4	12	6	3	9	
		110.0	12	12	4	12	3	12	6	3	9		11	4		7	
		200.0	11	4		7		11	4		7		11	4		7	
	* 7/16"Φ WOOD BUSHING W/ 7/8" MIN. EMBEDMENT STAINLESS STEEL STEEL MACHINE SCREW	48.0	12	12		12		12	12		12		10	10		10	
		62.0	12	12		12		12	12		12		8	5		6	
		72.0	12	12		12		10	10		10		7	3		4	
		110.0	9	9		9		6	3		4		5			3	
		200.0	5			3		5			3		5			3	

ANCHOR NOTES:

1. **SPANS AND LOADS SHOWN HERE ARE FOR DETERMINING ANCHOR SPACING ONLY. ALLOWABLE STORM SHUTTER SPANS FOR SPECIFIC LOADS MUST BE LIMITED TO THOSE SHOWN IN TABLE 1, SHEET 6.**
2. ENTER ANCHOR SCHEDULE BASED ON THE EXISTING STRUCTURE MATERIAL, ANCHOR TYPE AND EDGE DISTANCE. SELECT DESIGN LOAD GREATER THAN OR EQUAL TO NEGATIVE DESIGN LOAD ON SHUTTER AND SELECT SPAN GREATER THAN OR EQUAL TO SHUTTER SPAN.
3. SEE MOUNTING SECTION DETAILS FOR IDENTIFICATION OF CONNECTION TYPE.
4. EXISTING STRUCTURE MAY BE CONCRETE, HOLLOW BLOCK OR WOOD FRAMING. REFERENCE ANCHOR SCHEDULE FOR PROPER ANCHOR TYPE BASED ON TYPE OF EXISTING STRUCTURE AND APPROPRIATE CONNECTION TYPE. SEE CONNECTION DETAILS FOR IDENTIFICATION OF CONNECTION TYPE.
5. ANCHORS SHALL BE INSTALLED IN ACCORDANCE WITH MANUFACTURERS' RECOMMENDATIONS. EMBEDMENT LENGTHS SHALL BE AS NOTED AND DO NOT INCLUDE STUCCO OR OTHER FINISHES.
6. WHERE EXISTING STRUCTURE IS WOOD FRAMING, WOOD FRAMING CONDITIONS VARY. FIELD VERIFY THAT FASTENERS ARE INTO ADEQUATE WOOD FRAMING MEMBERS, NOT PLYWOOD. FASTENING TO PLYWOOD IS ACCEPTABLE ONLY FOR SIDE CLOSURE PIECES.
7. WHERE LAG SCREWS FASTEN TO NARROW FACE OF STUD FRAMING, FASTENER SHALL BE LOCATED IN CENTER OF NOMINAL 2" x 4" (MIN.) WOOD STUD. 3/4" EDGE DISTANCE IS ACCEPTABLE FOR WOOD FRAMING. WOOD STUD SHALL BE "SOUTHERN PINE" G=0.55 OR GREATER DENSITY. LAG SCREWS SHALL HAVE PHILLIPS PAN HEAD OR HEX HEAD.
8. MACHINE SCREWS SHALL HAVE MINIMUM OF 1/2" ENGAGEMENT OF THREADS IN BASE ANCHOR AND MAY HAVE EITHER A PAN HEAD, TRUSS HEAD, OR WAFER HEAD (SIDEWALK BOLT), U.O.N.
9. ▨ DESIGNATES ANCHOR CONDITIONS WHICH ARE NOT ACCEPTABLE USES.
10. * DESIGNATES ANCHORS WHICH ARE REMOVABLE BY REMOVING MACHINE SCREW, NUT OR WASHERED WINGNUT.

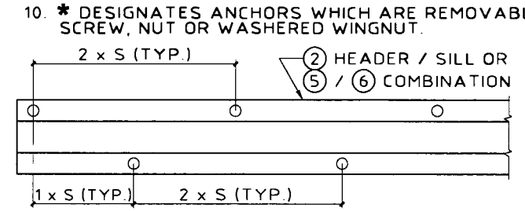

NOTE: "S" INDICATES ANCHOR SCHEDULE SPACING.

SPACING DIAGRAM FOR:

- C1 CONNECTION TYPE USING PIECE ②
- C3 CONNECTION TYPE USING PIECE ⑥ WITH OUTSIDE ANCHORS
- APPLICABLE TO 6.8 SYSTEM ONLY

APPROVED AS COMPLYING WITH THE SOUTH FLORIDA BUILDING CODE
DATE 08/10/2001
BY Henry A. Walker
PRODUCT CONTROL DIVISION
BUILDING CODE COMPLIANCE OFFICE
ACCEPTANCE NO. 01-0614.08

KNEZEVICH & ASSOCIATES, INC.
CONSULTING ENGINEERS • PRODUCT TESTING
1260 N. UNIVERSITY DRIVE, SUITE 180 • FORT LAUDERDALE, FL 33322
TEL: (954) 382-2800 • FAX: (954) 382-2989 • FLORIDA COA #3205
WEBSITE: WWW.KNEZEVICH.COM • E-MAIL: KA@KNEZEVICH.COM

COPYRIGHT © 2001 KNEZEVICH & ASSOCIATES, INC.

6.8/HR SYSTEM LICENSED BY SOUTHERN SHUTTER ASSOCIATION

6.8-HR ACCORDION SHUTTER

PETROLEUM EQUIPMENT MANUFACTURING COMPANY, INC.
2185 W. 76th STREET • HIALEAH, FL 33016
PHONE:(305) 558-8911 • FAX:(305) 558-8282

V.J. KNEZEVICH
PROFESSIONAL ENGINEER
FL License No: PE 0010983
MAY 25 2001

revisions			
no	date	by	description
1	03/19/99	VJK	COUNTY COMMENTS
2	04/13/00	VJK	GENERAL REVISIONS
3	06/22/00	VJK	ADD HR ACCORDION SYSTEM
4	12/27/00	VJK	COUNTY COMMENTS
5	02/05/01	AS	GENERAL REVISIONS
6	02/08/01	AS	COUNTY COMMENTS

SSA I.D. #0524019825 4D

date 12/08/98
scale AS NOTED
drawn by AV
design by VJK
checked by VJK
drawing no. 01-859
sheet 5 of 11

6.8 ACCORDION SHUTTER

NOT APPLICABLE TO HR ACCORDION SHUTTER

TABLE 2 — MINIMUM SHUTTER SEPARATION FROM GLASS

POSITIVE DESIGN LOAD (W) (P.S.F.)	ACTUAL SHUTTER SPAN (L) (FT - IN)	MIN. SEPARATION FROM GLASS FOR INSTALLATIONS LESS THAN OR EQUAL TO 30' ABOVE GRADE (IN.)	MIN. SEPARATION FROM GLASS FOR INSTALLATIONS GREATER THAN 30' ABOVE GRADE (IN.)
40.0	8-3	3-1/8	1-5/8
	10-0	3-3/4	2-1/8
	11-11	3-3/4	3
50.0	8-3	3-1/8	1-3/4
	10-0	3-3/4	2-3/8
	11-3	3-3/4	3
60.0	5-0	3-1/8	1-1/4
	8-3	3-1/8	1-7/8
	10-9	3-3/4	3
70.0	5-0	3-1/8	1-1/8
	8-3	3-1/8	1-7/8
	10-4	3-3/4	3
80.0	6-0	3-1/8	1-3/8
	8-3	3-1/8	2-1/8
	9-4	3-3/4	2-5/8
90.0	5-0	3-1/8	1-3/8
	7-0	3-1/8	1-5/8
	8-3	3-1/8	2-1/8
100.0	5-0	3-1/8	1-3/8
	7-0	3-1/8	1-3/4
	8-3	3-1/8	2-1/4
110.0	5-0	3-1/8	1-3/8
	7-0	3-1/8	1-7/8
	8-3	3-1/8	2-3/8
120.0	5-0	3-1/8	1-3/8
	7-0	3-1/8	1-7/8
	8-3	3-1/8	2-1/4
130.0	5-0	3-1/8	1-3/8
	7-0	3-1/8	1-7/8
	8-3	3-1/8	2-1/2

TABLE 1 NOTES:

1. DETERMINE BOTH THE POSITIVE AND THE NEGATIVE WIND LOADS. CHECK THEIR RESPECTIVE SPANS AND USE THE LESSER VALUE OF THE TWO.
2. FOR DESIGN LOADS BETWEEN TABULATED VALUES USE NEXT HIGHER LOAD OR LINEAR INTERPOLATION MAY BE USED TO DETERMINE ALLOWABLE SPANS.

TABLE 2 NOTE:

1. ENTER TABLE 2 WITH POSITIVE DESIGN LOAD TO DETERMINE MIN. STORM SHUTTER SEPARATION FROM GLASS.

TABLE 1 — ACCORDION SHUTTER SPAN SCHEDULE FOR ALL MOUNTING CONDITIONS

DESIGN WIND LOAD W (P.S.F.)	POSITIVE WIND LOAD	NEGATIVE WIND LOAD
	L max. (FT - IN)	L max. (FT - IN)
30.0	12-10	12-10
35.0	12-4	12-10
40.0	11-11	12-10
45.0	11-7	12-10
50.0	11-3	12-10
55.0	11-0	12-10
60.0	10-9	12-4
65.0	10-6	11-6
70.0	10-4	10-8
72.0	10-3	10-4
75.0	10-2	9-11
80.0	9-11	9-4
90.0	9-7	8-4
100.0	9-3	8-3
110.0	9-0	8-3
120.0	8-8	8-3
130.0	8-4	8-3
133.0	8-3	8-3
140.0	7-11	7-11
150.0	7-5	7-5
160.0	6-11	6-11
170.0	6-6	6-6
180.0	6-2	6-2
190.0	5-10	5-10
200.0	5-6	5-6

APPROVED AS COMPLYING WITH THE
SOUTH FLORIDA BUILDING CODE
DATE 08/10/2001
BY Helmy A. Mohr
PRODUCT CONTROL DIVISION
BUILDING CODE COMPLIANCE OFFICE
ACCEPTANCE NO. 01-0614.08

KNEZEVICH & ASSOCIATES, INC.
CONSULTING ENGINEERS • PRODUCT TESTING
1260 N. UNIVERSITY DRIVE, SUITE 180 • FORT LAUDERDALE, FL 33322
TEL: (954) 382-2800 • FAX: (954) 382-2989 • FLORIDA COA #3205
WEBSITE: WWW.KNEZEVICH.COM • E-MAIL: KA@KNEZEVICH.COM
COPYRIGHT © 2001 KNEZEVICH & ASSOCIATES, INC.
6.8/HR SYSTEM LICENSED BY SOUTHERN SHUTTER ASSOCIATION

6.8-HR ACCORDION SHUTTER

PEMCO
PETROLEUM EQUIPMENT MANUFACTURING COMPANY, INC.
2185 W. 76th STREET • HIALEAH, FL 33016
PHONE:(305) 558-8911 • FAX:(305) 558-8282

VJ. KNEZEVICH
PROFESSIONAL ENGINEER
FL License No:
PE 0010983
MAY 25 2001

revisions

no	date	by	description
1	03/19/99	VJK	COUNTY COMMENTS
2	04/13/00	JWK	GENERAL REVISIONS
3	06/22/00	VJK	ADD HR ACCORDION SYSTEM
4	12/27/00	VJK	COUNTY COMMENTS
5	02/05/01	AS	GENERAL REVISIONS
6	02/08/01	AS	COUNTY COMMENTS

SSA I.D. #0524019825 4D

date 12/08/98
scale AS NOTED
drawn by AV
design by VJK
checked by VJK
drawing no. 01-859
sheet 6 of 11

HR ACCORDION SHUTTER

NOT APPLICABLE TO 6.8 ACCORDION SHUTTER

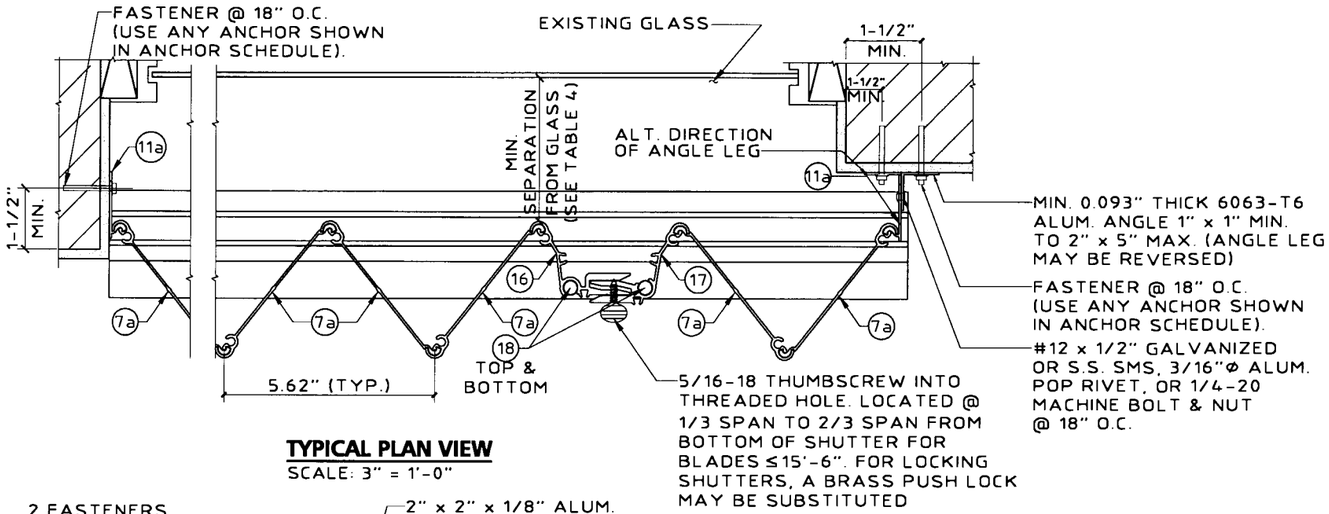

TYPICAL PLAN VIEW
SCALE: 3" = 1'-0"

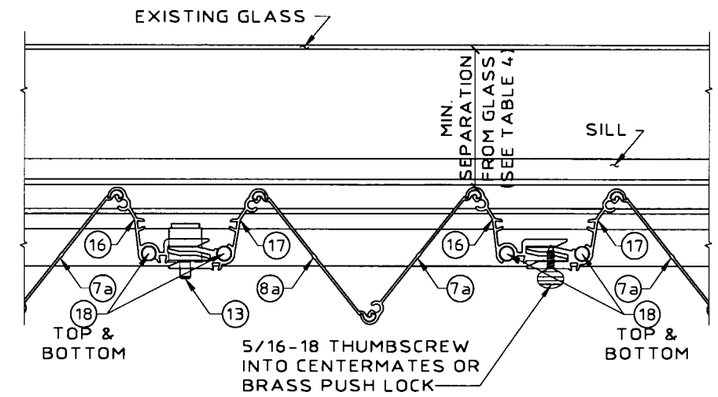

MULTIPLE SHUTTER ASSEMBLY
SCALE: 3" = 1'-0"

NOTE:
STARTER (11a) LOCATION MUST BE ADJUSTED TO INSURE FULL DEPLOYMENT OF SHUTTER AND COMPLETE INTERLOCKING OF ADJACENT BLADES.

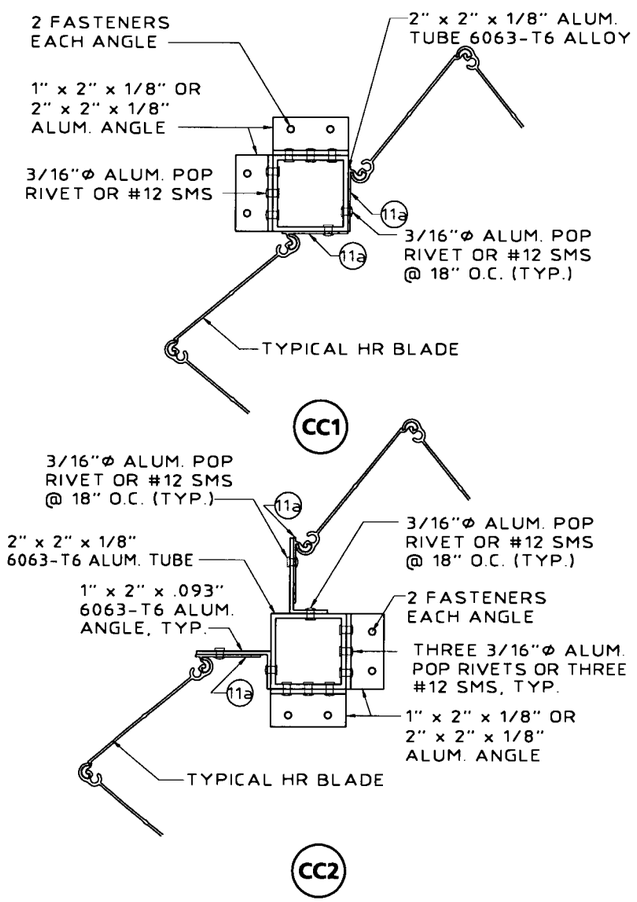

TYPICAL CORNER CLOSURE DETAILS
SCALE: 3" = 1'-0"

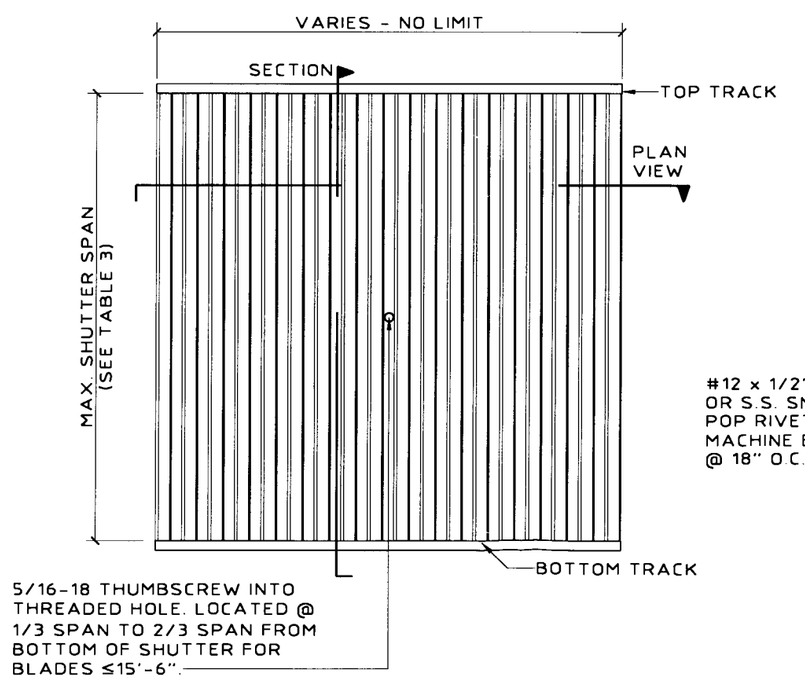

TYPICAL ELEVATION
N.T.S.

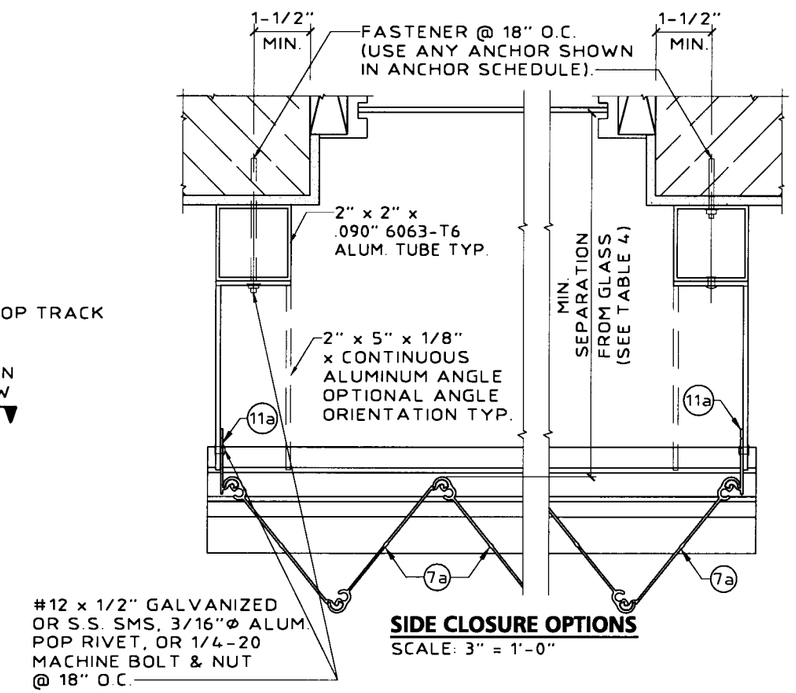

SIDE CLOSURE OPTIONS
SCALE: 3" = 1'-0"

APPROVED AS COMPLYING WITH THE SOUTH FLORIDA BUILDING CODE
DATE 08/10/2001
BY [signature]
PRODUCT CONTROL DIVISION
BUILDING CODE COMPLIANCE OFFICE
ACCEPTANCE NO. 01-0614.08

KNEZEVICH & ASSOCIATES, INC.
CONSULTING ENGINEERS • PRODUCT TESTING
1260 N. UNIVERSITY DRIVE, SUITE 180 • FORT LAUDERDALE, FL 33322
TEL: (954) 382-2800 • FAX: (954) 382-2989 • FLORIDA COA #3205
WEBSITE: WWW.KNEZEVICH.COM • E-MAIL: KA@KNEZEVICH.COM

COPYRIGHT © 2001 KNEZEVICH & ASSOCIATES, INC.

6.8/HR SYSTEM LICENSED BY SOUTHERN SHUTTER ASSOCIATION

6.8-HR ACCORDION SHUTTER

PEMCO
PETROLEUM EQUIPMENT MANUFACTURING COMPANY, INC.
2185 W. 76th STREET • HIALEAH, FL 33016
PHONE:(305) 558-9911 • FAX:(305) 558-8282

V.J. KNEZEVICH
PROFESSIONAL ENGINEER
FL License No: PE 0010983
MAY 25 2001

revisions

no	date	by	description
1	03/19/99	VJK	COUNTY COMMENTS
2	04/13/00	JWK	GENERAL REVISIONS
3	06/22/00	VJK	ADD HR ACCORDION SYSTEM
4	12/27/00	VJK	COUNTY COMMENTS
5	02/05/01	AS	GENERAL REVISIONS
6	02/08/01	AS	COUNTY COMMENTS

SSA I.D. #0524019825 4D

date 12/08/98
scale AS NOTED
drawn by AV
design by VJK
checked by VJK
drawing no. 01-859
sheet 7 of 11

HR ACCORDION SHUTTER

NOT APPLICABLE TO 6.8 ACCORDION SHUTTER

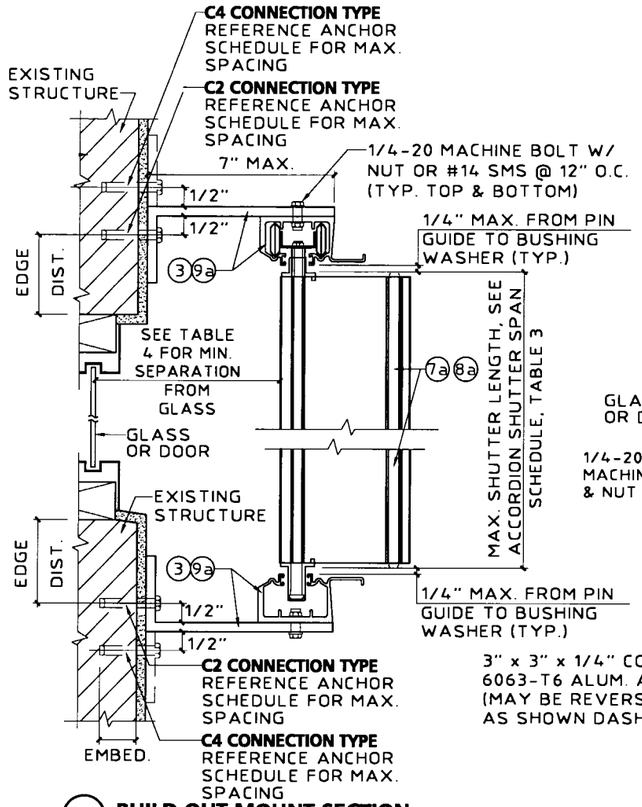

M BUILD OUT MOUNT SECTION
SCALE : 3"= 1'- 0"

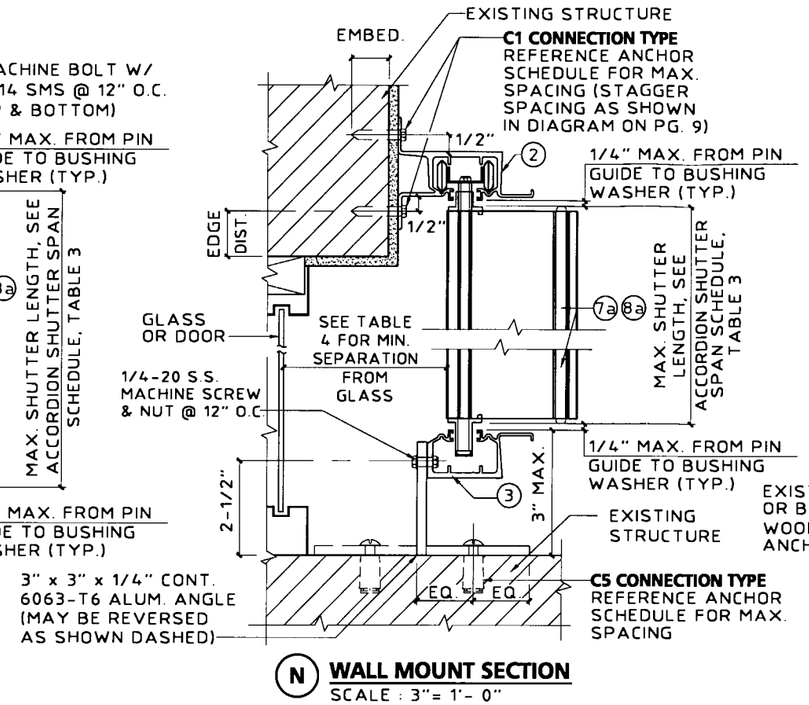

N WALL MOUNT SECTION
SCALE : 3"= 1'- 0"

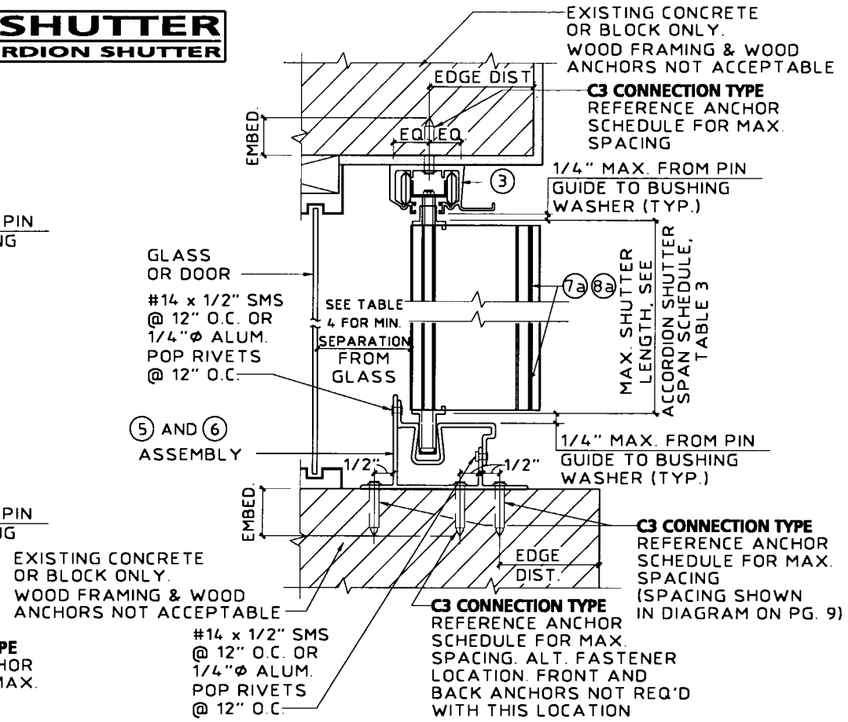

P CEILING / INSIDE MOUNT SECTION
SCALE : 3"= 1'- 0"

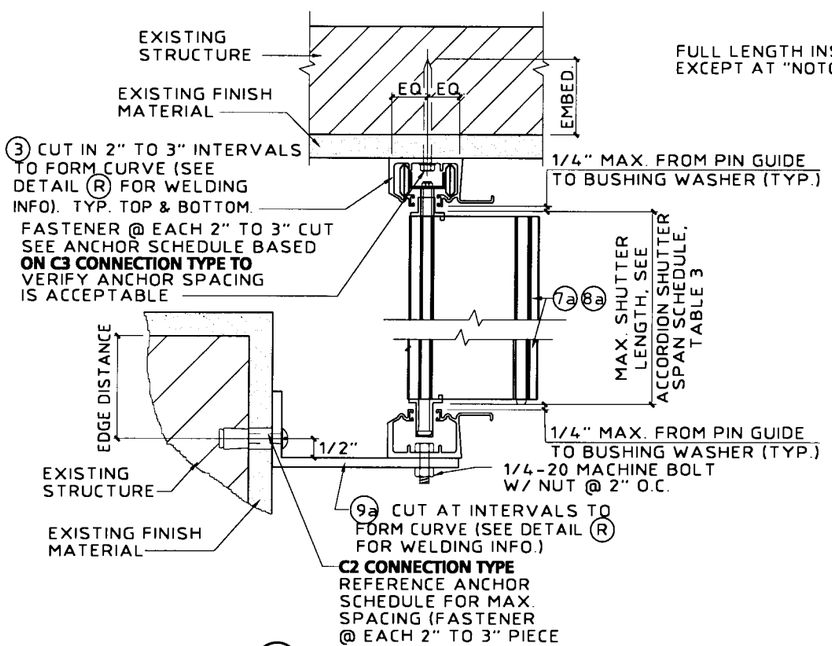

Q CURVED TRACK DETAIL
SCALE : 3"= 1'- 0"

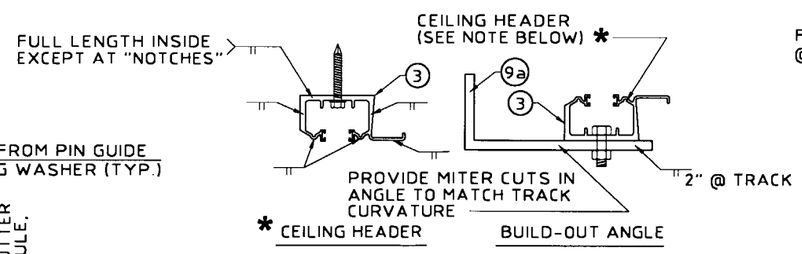

* NOTE: WHEN CEILING HEADER IS USED IN A BOTTOM MOUNTING CONDITION, WELDING LOCATIONS ARE THE SAME.
(USE ER4093 FILLER ALLOY FOR ALL WELDING.)

R WELDING DETAILS
SCALE : 3"= 1'- 0"

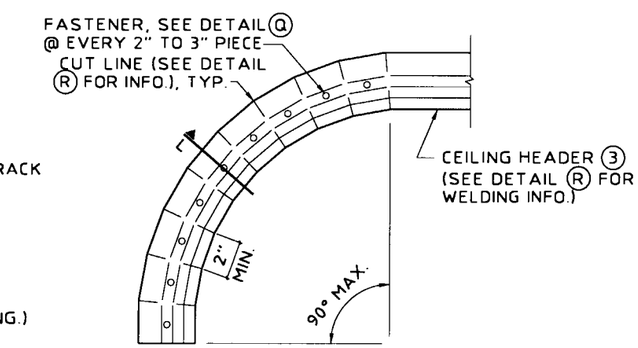

CURVED TRACK PLAN VIEW
N.T.S.

APPROVED AS COMPLYING WITH THE SOUTH FLORIDA BUILDING CODE
DATE 08/10/2001
BY Helmy A. Mahr
PRODUCT CONTROL DIVISION
BUILDING CODE COMPLIANCE OFFICE
ACCEPTANCE NO. 01-0614.08

KNEZEVICH & ASSOCIATES, INC.
CONSULTING ENGINEERS • PRODUCT TESTING
1260 N. UNIVERSITY DRIVE, SUITE 180 • FORT LAUDERDALE, FL 33322
TEL: (954) 382-2800 • FAX: (954) 382-2989 • FLORIDA COA #3205
WEBSITE: WWW.KNEZEVICH.COM • E-MAIL: KA@KNEZEVICH.COM

COPYRIGHT © 2001 KNEZEVICH & ASSOCIATES, INC.

6.8/HR SYSTEM LICENSED BY SOUTHERN SHUTTER ASSOCIATION

6.8-HR ACCORDION SHUTTER

PEMCO
PETROLEUM EQUIPMENT MANUFACTURING COMPANY, INC.
2185 W. 76th STREET • HIALEAH, FL 33016
PHONE:(305) 558-9911 • FAX:(305) 558-8282

V.J. KNEZEVICH
PROFESSIONAL ENGINEER
FL License No: PE 0010983
MAY 2 5 2001

revisions

no	date	by	description
1	03/19/99	VJK	COUNTY COMMENTS
2	04/13/00	JWK	GENERAL REVISIONS
3	06/22/00	VJK	ADD HR ACCORDION SYSTEM
4	12/27/00	VJK	COUNTY COMMENTS
5	02/05/01	AS	GENERAL REVISIONS
6	02/08/01	AS	COUNTY COMMENTS

SSA ID. #0524019825 4D

date 12/08/98	
scale AS NOTED	drawn by AV
design by VJK	checked by VJK
drawing no. 01-859	
sheet 8 of 11	

HR ACCORDION SHUTTER
NOT APPLICABLE TO 6.8 ACCORDION SHUTTER

ANCHOR SCHEDULE
FASTENER SPACING (INCHES) REQUIRED FOR VARIOUS DESIGN LOADS AND SPANS

EXISTING STRUCTURE	ANCHOR TYPE	LOAD (W) P.S.F. MAX. (SEE NOTE 1)	MIN. 2" EDGE DISTANCE																			
			SPANS UP TO 6' - 0" (SEE NOTE 1)					SPANS UP TO 8' - 8" (SEE NOTE 1)					SPANS UP TO 10' - 2" (SEE NOTE 1)					SPANS UP TO 15' - 6" (SEE NOTE 1)				
			CONNECTION TYPE (SEE NOTE 3)					CONNECTION TYPE (SEE NOTE 3)					CONNECTION TYPE (SEE NOTE 3)					CONNECTION TYPE (SEE NOTE 3)				
			C1	C2	C3	C4	C5	C1	C2	C3	C4	C5	C1	C2	C3	C4	C5	C1	C2	C3	C4	C5
CONCRETE	1/4"Φ ITW OR ELCO TAPCON W/ 1-3/4" MIN. EMBEDMENT **(MIN. 3,000 P.S.I. CONCRETE)**	75.0	9	12	12	12	9	9	12	9	12	6	9	12	7	12	5	9	10	5	10	3
		90.0	9	12	10	12	8	9	12	7	12	5	9	12	6	12	4	9	8	4	8	3
		140.0	9	12	7	12	5	9	10	4	10	3	9	8	4	8	3	9	7	3	7	
		180.0	9	11	5	11	4	9	7	3	7		9	7	3	7		9	7	3	7	
		230.0	9	8	4	8	3	9	7	3	7		9	7	3	7		9	7	3	7	
	* 1/4"Φ POWERS FASTENING CALK-IN W/ 7/8" EMBED. & 1/4-20 STAINLESS STEEL MACHINE SCREW **(MIN. 3,000 P.S.I. CONCRETE)**	75.0	9	12	10	12	8	9	12	7	12	5	9	12	6	12	4	9	11	3	11	3
		90.0	9	12	8	12	6	9	12	5	12	4	9	12	5	12	4	9	9	3	9	
		140.0	9	12	5	12	4	9	11	3	11	3	9	9	3	9		9	8		8	
		180.0	9	12	4	12	3	9	8		8		9	8		8		9	8		8	
		230.0	9	9	3	9		9	8		8		9	8		8		9	8		8	
	1/4"Φ ELCO CRETE FLEX W/ 2" MIN. EMBEDMENT **(MIN. 3,300 P.S.I. CONCRETE)**	75.0	9	12	12	12	12	9	12	12	12	10	9	12	11	12	9	9	12	7	12	5
		90.0	9	12	12	12	12	9	12	11	12	8	9	12	9	12	7	9	12	6	12	4
		140.0	9	12	10	12	8	9	12	7	12	5	9	12	6	12	4	9	12	5	12	4
		180.0	9	12	8	12	6	9	12	5	12	4	9	12	5	12	4	9	12	5	12	4
		230.0	9	12	6	12	5	9	12	5	12	4	9	12	5	12	4	9	12	5	12	4
HOLLOW CONCRETE BLOCK	1/4"Φ ITW TAPCON W/ 1-1/4" MIN. EMBEDMENT	75.0	9	10	6	10	4	9	7	4	7	3	7	6	3	6		5	3		3	
		90.0	9	8	5	8	3	7	5	3	5		6	5	3	5		4	3		3	
		140.0	7	5	3	5		4	3		3		4	3		3		3				
		180.0	5	4		4		3					3					3				
		230.0	4	3		3		3					3					3				
	* 1/4"Φ POWERS FASTENING CALK-IN W/ 7/8" EMBED. & 1/4-20 STAINLESS STEEL MACHINE SCREW	75.0	9	12	6	12	4	9	8	4	8	3	9	7	3	7		6	4		4	
		90.0	9	10	5	10	3	9	7	3	7		7	6	3	6		5	4		4	
		140.0	8	6	3	6		6	4		4		5	3		3		4	3		3	
		180.0	6	5		5		4	3		3		4	3		3		4	3		3	
		230.0	5	4		4		4	3		3		4	3		3		4	3		3	
	1/4"Φ ELCO CRETE FLEX W/ 1-1/4" MIN. EMBEDMENT	75.0	9	12	9	12	7	9	12	6	12	5	9	12	5	12	4	9	8	3	8	
		90.0	9	12	7	12	6	9	12	5	12	4	9	10	4	10	3	8	6	3	6	
		140.0	9	11	5	11	3	9	7	3	7		8	6	3	6		7	5		5	
		180.0	9	8	3	8	3	7	6		6		7	5		5		7	5		5	
		230.0	8	6	3	6		7	5		5		7	5		5		7	5		5	
	1/4"Φ ELCO TAPCON W/ 1-1/4" MIN. EMBEDMENT	75.0	12	12	8	12	6	12	9	6	9	4	10	8	5	8	3	6	5	3	5	
		90.0	12	11	7	11	5	10	7	5	7	3	8	6	4	6	3	5	4		4	
		140.0	9	7	4	7	3	6	5	3	5		5	4		4		4	3		3	
		180.0	7	5	3	5		5	3		3		4	3		3		4	3		3	
		230.0	5	4		4		4	3		3		4	3		3		4	3		3	

APPROVED AS COMPLYING WITH THE SOUTH FLORIDA BUILDING CODE
DATE 08/10/2001
BY Helmy A. Makar
PRODUCT CONTROL DIVISION
BUILDING CODE COMPLIANCE OFFICE
ACCEPTANCE NO. 01-0614.08

ANCHOR SCHEDULE
FASTENER SPACING (INCHES) REQUIRED FOR VARIOUS DESIGN LOADS AND SPANS

EXISTING STRUCTURE	ANCHOR TYPE	LOAD (W) P.S.F. MAX. (SEE NOTE 1)	MIN. 3/4" EDGE DISTANCE														
			SPANS UP TO 6' - 0" (SEE NOTE 1)					SPANS UP TO 8' - 8" (SEE NOTE 1)					SPANS UP TO 15' - 6" (SEE NOTE 1)				
			CONNECTION TYPE (SEE NOTE 3)					CONNECTION TYPE (SEE NOTE 3)					CONNECTION TYPE (SEE NOTE 3)				
			C1	C2	C3	C4	C5	C1	C2	C3	C4	C5	C1	C2	C3	C4	C5
WOOD	T≥1-27/32" 1/4"Φ WOOD LAG SCREW W/ MIN. 1-27/32" THREADED PENETRATION "T" SHEAR PARALLEL OR PERPENDICULAR TO WOOD GRAIN	75.0	9	12	8	12	6	9	12	5	12	4	9	12	3	12	
		90.0	9	12	6	12	5	9	12	4	12	4	9	11		11	
		140.0	9	12	4	12	3	9	12	3	12		9	9		9	
		180.0	9	12	3	12		9	9		9		9	9		9	
		230.0	9	11		11		9	9		9		9	9		9	
	* 7/16"Φ WOOD BUSHING W/ 7/8" MIN. EMBEDMENT STAINLESS STEEL STEEL MACHINE SCREW	75.0	9	12		12		9	8		8		6	4			
		90.0	9	10		10		9	7		7		5	3			
		140.0	8	6		6		5	4		4		4	3			
		180.0	6	5		5		4	3		3		4	3			
		230.0	5	4		4		4	3		3		4	3			

ANCHOR NOTES:

1. **SPANS AND LOADS SHOWN HERE ARE FOR DETERMINING ANCHOR SPACING ONLY. ALLOWABLE STORM SHUTTER SPANS FOR SPECIFIC LOADS MUST BE LIMITED TO THOSE SHOWN IN TABLE 3, SHEET 11.**
2. ENTER ANCHOR SCHEDULE BASED ON THE EXISTING STRUCTURE MATERIAL, ANCHOR TYPE AND EDGE DISTANCE. SELECT DESIGN LOAD GREATER THAN OR EQUAL TO NEGATIVE DESIGN LOAD ON SHUTTER AND SELECT SPAN GREATER THAN OR EQUAL TO SHUTTER SPAN.
3. SEE MOUNTING SECTION DETAILS FOR IDENTIFICATION OF CONNECTION TYPE.
4. EXISTING STRUCTURE MAY BE CONCRETE, HOLLOW BLOCK OR WOOD FRAMING. REFERENCE ANCHOR SCHEDULE FOR PROPER ANCHOR TYPE BASED ON TYPE OF EXISTING STRUCTURE AND APPROPRIATE CONNECTION TYPE. SEE CONNECTION DETAILS FOR IDENTIFICATION OF CONNECTION TYPE.
5. ANCHORS SHALL BE INSTALLED IN ACCORDANCE WITH MANUFACTURERS' RECOMMENDATIONS. EMBEDMENT LENGTHS SHALL BE AS NOTED AND DO NOT INCLUDE STUCCO OR OTHER FINISHES.
6. WHERE EXISTING STRUCTURE IS WOOD FRAMING, WOOD FRAMING CONDITIONS VARY. FIELD VERIFY THAT FASTENERS ARE INTO ADEQUATE WOOD FRAMING MEMBERS, NOT PLYWOOD. FASTENING TO PLYWOOD IS ACCEPTABLE ONLY FOR SIDE CLOSURE PIECES.
7. WHERE LAG SCREWS FASTEN TO NARROW FACE OF STUD FRAMING, FASTENER SHALL BE LOCATED IN CENTER OF NOMINAL 2" x 4" (MIN.) WOOD STUD. 3/4" EDGE DISTANCE IS ACCEPTABLE FOR WOOD FRAMING. WOOD STUD SHALL BE "SOUTHERN PINE" G=0.55 OR GREATER DENSITY. LAG SCREWS SHALL HAVE PHILLIPS PAN HEAD OR HEX HEAD.
8. MACHINE SCREWS SHALL HAVE MINIMUM OF 1/2" ENGAGEMENT OF THREADS IN BASE ANCHOR AND MAY HAVE EITHER A PAN HEAD, TRUSS HEAD, OR WAFER HEAD (SIDEWALK BOLT), U.O.N.
9. (hatched box) DESIGNATES ANCHOR CONDITIONS WHICH ARE NOT ACCEPTABLE USES.
10. * DESIGNATES ANCHORS WHICH ARE REMOVABLE BY REMOVING MACHINE SCREW, NUT OR WASHERED WINGNUT.

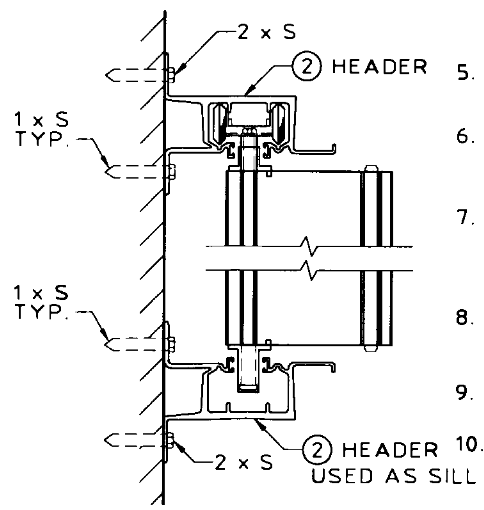

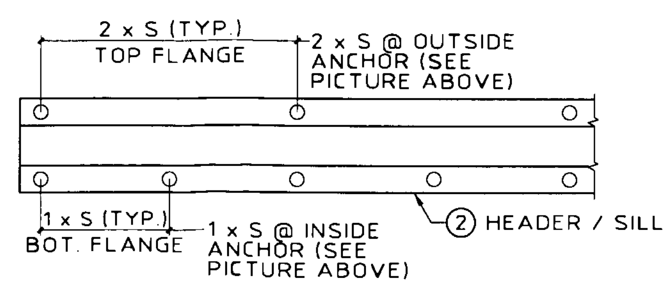

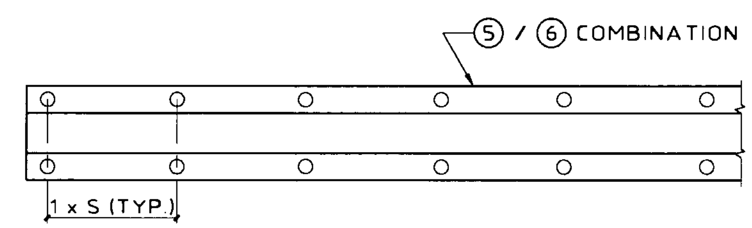

NOTE: "S" INDICATES ANCHOR SCHEDULE SPACING.

SPACING DIAGRAM FOR C1 CONNECTION TYPE:
- C1 CONNECTION TYPE USING PIECE (2)
- APPLICABLE TO HR SYSTEM ONLY

SPACING DIAGRAM FOR C3 CONNECTION TYPE:
- C3 CONNECTION TYPE USING PIECE (6) WITH OUTSIDE ANCHORS ONLY
- APPLICABLE TO HR SYSTEM ONLY

KNEZEVICH & ASSOCIATES, INC.
CONSULTING ENGINEERS • PRODUCT TESTING
1260 N. UNIVERSITY DRIVE, SUITE 180 • FORT LAUDERDALE, FL 33322
TEL: (954) 382-2800 • FAX: (954) 382-2989 • FLORIDA COA #3205
WEBSITE: WWW.KNEZEVICH.COM • E-MAIL: KA@KNEZEVICH.COM

COPYRIGHT © 2001 KNEZEVICH & ASSOCIATES, INC.
6.8/HR SYSTEM LICENSED BY SOUTHERN SHUTTER ASSOCIATION

6.8-HR ACCORDION SHUTTER

PEMCO
PETROLEUM EQUIPMENT MANUFACTURING COMPANY, INC.
2185 W. 76th STREET • HIALEAH, FL 33016
PHONE:(305) 558-9911 • FAX:(305) 558-8282

V.J. KNEZEVICH
PROFESSIONAL ENGINEER
FL License No: PE 0010983
MAY 25 2001

no	date	by	description
1	03/19/99	VJK	COUNTY COMMENTS
2	04/13/00	JWK	GENERAL REVISIONS
3	06/22/00	VJK	ADD HR ACCORDION SYSTEM
4	12/27/00	VJK	COUNTY COMMENTS
5	02/05/01	AS	GENERAL REVISIONS
6	02/08/01	AS	COUNTY COMMENTS

SSA I.D. #05240198254D

date 12/08/98
scale AS NOTED — drawn by AV
design by VJK — checked by VJK
drawing no. 01-859
sheet 9 of 11

HR ACCORDION SHUTTER

NOT APPLICABLE TO 6.8 ACCORDION SHUTTER

ANCHOR SCHEDULE

FASTENER SPACING (INCHES) REQUIRED FOR VARIOUS DESIGN LOADS AND SPANS

EXISTING STRUCTURE	ANCHOR TYPE	LOAD (W) P.S.F. MAX. (SEE NOTE 1)	MIN. 3" EDGE DISTANCE																			
			SPANS UP TO 6' - 0" (SEE NOTE 1)					SPANS UP TO 8' - 8" (SEE NOTE 1)					SPANS UP TO 10' - 2" (SEE NOTE 1)					SPANS UP TO 15' - 6" (SEE NOTE 1)				
			CONNECTION TYPE (SEE NOTE 3)					CONNECTION TYPE (SEE NOTE 3)					CONNECTION TYPE (SEE NOTE 3)					CONNECTION TYPE (SEE NOTE 3)				
			C1	C2	C3	C4	C5	C1	C2	C3	C4	C5	C1	C2	C3	C4	C5	C1	C2	C3	C4	C5
CONCRETE	1/4"Ø ITW OR ELCO TAPCON W/ 1-3/4" MIN. EMBEDMENT (MIN. 3,000 P.S.I. CONCRETE)	75.0	9	12	12	12	11	9	12	10	12	7	9	12	9	12	6	9	11	5	6	3
		90.0	9	12	12	12	9	9	12	8	12	6	9	12	7	12	5	9	9	4	4	3
		140.0	9	12	8	12	6	9	11	5	11	4	9	9	4	9	3	9	8	3	3	
		180.0	9	12	6	12	4	9	8	4	8	3	9	8	4	8	3	9	8	3	3	
		230.0	9	9	4	9	3	9	8	4	8	3	9	8	4	8	3	9	8	3	3	
	* 3/8"Ø POWERS RAWL DROP-IN & 3/8"Ø STAINLESS STEEL BOLT WITH 1-9/16" MIN. EMBEDMENT (MIN. 3,000 P.S.I. CONCRETE)	75.0	9	12	12	12	16	9	12	12	12	12	9	12	12	12	10	9	12	8	12	7
		90.0	9	12	12	12	15	9	12	12	12	10	9	12	11	12	9	9	12	7	12	5
		140.0	9	12	12	12	9	9	12	8	12	6	9	12	7	12	5	9	12	6	12	4
		180.0	9	12	9	12	7	9	12	6	12	5	9	12	6	12	4	9	12	6	12	4
		230.0	9	12	7	12	5	9	12	6	12	4	9	12	6	12	4	9	12	6	12	4
	* 1/4"Ø POWERS FASTENING CALK-IN W/ 7/8" EMBED. & 1/4-20 STAINLESS STEEL MACHINE SCREW (MIN. 3,000 P.S.I. CONCRETE)	75.0	9	12	12	12	12	9	12	11	12	9	9	12	10	12	7	9	12	6	8	4
		90.0	9	12	12	12	10	9	12	9	12	7	9	12	8	12	6	9	12	5	6	3
		140.0	9	12	9	12	7	9	12	6	12	4	9	11	5	11	4	9	10	4	4	3
		180.0	9	12	7	12	5	9	10	4	10	3	9	10	4	10	3	9	10	4	4	3
		230.0	9	12	5	12	4	9	10	4	10	3	9	10	4	10	3	9	10	4	4	3
	1/4"Ø ELCO CRETE FLEX W/ 2" MIN. EMBEDMENT (MIN. 3,300 P.S.I. CONCRETE)	75.0	9	12	12	12	12	9	12	12	12	12	9	12	12	12	10	9	12	8	10	6
		90.0	9	12	12	12	12	9	12	12	12	10	9	12	11	12	8	9	12	7	8	5
		140.0	9	12	12	12	9	9	12	8	12	6	9	12	7	12	5	9	12	5	6	4
		180.0	9	12	9	12	7	9	12	6	12	5	9	12	6	12	4	9	12	5	6	4
		230.0	9	12	7	12	5	9	12	6	12	4	9	12	6	12	4	9	12	5	6	4
HOLLOW CONCRETE BLOCK	1/4"Ø ITW TAPCON W/ 1-1/4" MIN. EMBEDMENT	75.0	9	11	6	11	4	9	7	4	7	3	8	6	4	6		5	4		4	
		90.0	9	9	5	9	4	8	6	4	6		7	5	3	5		4	3		3	
		140.0	7	5	3	5		5	4		4		4	3		3		3				
		180.0	5	4		4		4	3		3		3					3				
		230.0	4	3		3		3					3					3				
	* 1/4"Ø POWERS FASTENING CALK-IN W/ 7/8" EMBED. & 1/4-20 STAINLESS STEEL MACHINE SCREW	75.0	9	12	9	12	6	9	10	6	10	4	9	9	5	9	3	7	6	3	3	
		90.0	9	12	7	12	5	9	9	5	9	3	9	7	4	7	3	6	5			
		140.0	9	8	5	8	3	7	5	3	5		6	4		4		5	4			
		180.0	8	6	3	6		5	4		4		5	4		4		5	4			
		230.0	6	5	3	5		5	4		4		5	4		4		5	4			
	1/4"Ø ELCO CRETE FLEX W/ 1-1/4" MIN. EMBEDMENT	75.0	9	12	11	12	8	9	12	7	12	5	9	12	6	12	4	9	8	4	4	
		90.0	9	12	9	12	6	9	12	6	12	4	9	10	5	10	4	9	6	3	3	
		140.0	9	11	6	11	4	9	8	4	8	3	8	6	3	6		7	5			
		180.0	9	9	4	9	3	8	6	3	6		7	5	3	5		7	5			
		230.0	9	7	3	7		7	5	3	5		7	5	3	5		7	5			
	1/4"Ø ELCO TAPCON W/ 1-1/4" MIN. EMBEDMENT	75.0	12	12	10	12	7	12	10	6	10	4	11	9	5	9	4	7	6	3	6	
		90.0	12	12	8	12	5	11	8	5	8	4	9	7	4	7	3	6	5	3	5	
		140.0	10	8	5	8	3	7	5	3	5		6	4	3	4		5	4		4	
		180.0	8	6	4	6		5	4		4		5	4		4		5	4		4	
		230.0	6	5	3	5		5	4		4		5	4		4		5	4		4	

ANCHOR NOTES:

1. **SPANS AND LOADS SHOWN HERE ARE FOR DETERMINING ANCHOR SPACING ONLY. ALLOWABLE STORM SHUTTER SPANS FOR SPECIFIC LOADS MUST BE LIMITED TO THOSE SHOWN IN TABLE 3, SHEET 11.**
2. ENTER ANCHOR SCHEDULE BASED ON THE EXISTING STRUCTURE MATERIAL, ANCHOR TYPE AND EDGE DISTANCE. SELECT DESIGN LOAD GREATER THAN OR EQUAL TO NEGATIVE DESIGN LOAD ON SHUTTER AND SELECT SPAN GREATER THAN OR EQUAL TO SHUTTER SPAN.
3. SEE MOUNTING SECTION DETAILS FOR IDENTIFICATION OF CONNECTION TYPE.
4. EXISTING STRUCTURE MAY BE CONCRETE, HOLLOW BLOCK OR WOOD FRAMING. REFERENCE ANCHOR SCHEDULE FOR PROPER ANCHOR TYPE BASED ON TYPE OF EXISTING STRUCTURE AND APPROPRIATE CONNECTION TYPE. SEE CONNECTION DETAILS FOR IDENTIFICATION OF CONNECTION TYPE.
5. ANCHORS SHALL BE INSTALLED IN ACCORDANCE WITH MANUFACTURERS' RECOMMENDATIONS. EMBEDMENT LENGTHS SHALL BE AS NOTED AND DO NOT INCLUDE STUCCO OR OTHER FINISHES.
6. WHERE EXISTING STRUCTURE IS WOOD FRAMING, WOOD FRAMING CONDITIONS VARY. FIELD VERIFY THAT FASTENERS ARE INTO ADEQUATE WOOD FRAMING MEMBERS, NOT PLYWOOD. FASTENING TO PLYWOOD IS ACCEPTABLE ONLY FOR SIDE CLOSURE PIECES.
7. WHERE LAG SCREWS FASTEN TO NARROW FACE OF STUD FRAMING, FASTENER SHALL BE LOCATED IN CENTER OF NOMINAL 2" x 4" (MIN.) WOOD STUD. 3/4" EDGE DISTANCE IS ACCEPTABLE FOR WOOD FRAMING. WOOD STUD SHALL BE "SOUTHERN PINE" G=0.55 OR GREATER DENSITY. LAG SCREWS SHALL HAVE PHILLIPS PAN HEAD OR HEX HEAD.
8. MACHINE SCREWS SHALL HAVE MINIMUM OF 1/2" ENGAGEMENT OF THREADS IN BASE ANCHOR AND MAY HAVE EITHER A PAN HEAD, TRUSS HEAD, OR WAFER HEAD (SIDEWALK BOLT), U.O.N.
9. DESIGNATES ANCHOR CONDITIONS WHICH ARE NOT ACCEPTABLE USES.
10. * DESIGNATES ANCHORS WHICH ARE REMOVABLE BY REMOVING MACHINE SCREW, NUT OR WASHERED WINGNUT.

ANCHOR SCHEDULE

FASTENER SPACING (INCHES) REQUIRED FOR VARIOUS DESIGN LOADS AND SPANS

EXISTING STRUCTURE	ANCHOR TYPE	LOAD (W) P.S.F. MAX. (SEE NOTE 1)	MIN. 4-1/2" EDGE DISTANCE																			
			SPANS UP TO 6' - 0" (SEE NOTE 1)					SPANS UP TO 8' - 8" (SEE NOTE 1)					SPANS UP TO 10' - 2" (SEE NOTE 1)					SPANS UP TO 15' - 6" (SEE NOTE 1)				
			CONNECTION TYPE (SEE NOTE 3)					CONNECTION TYPE (SEE NOTE 3)					CONNECTION TYPE (SEE NOTE 3)					CONNECTION TYPE (SEE NOTE 3)				
			C1	C2	C3	C4	C5	C1	C2	C3	C4	C5	C1	C2	C3	C4	C5	C1	C2	C3	C4	C5
CONCRETE	* 3/8"Ø POWERS RAWL DROP-IN & 3/8"Ø STAINLESS STEEL BOLT WITH 1-9/16" MIN. EMBEDMENT (MIN. 3,000 P.S.I. CONCRETE)	75.0	9	12	12	12	16	9	12	12	12	16	9	12	12	12	16	9	12	12	12	10
		90.0	9	12	12	12	16	9	12	12	12	16	9	12	12	12	13	9	12	12	12	9
		140.0	9	12	12	12	15	9	12	12	12	10	9	12	11	12	8	9	12	10	12	7
		180.0	9	12	12	12	11	9	12	10	12	8	9	12	10	12	7	9	12	10	12	7
		230.0	9	12	12	12	9	9	12	10	12	7	9	12	10	12	7	9	12	10	12	7

APPROVED AS COMPLYING WITH THE
SOUTH FLORIDA BUILDING CODE
DATE 08/10/2001
BY Helmy A. Meier
PRODUCT CONTROL DIVISION
BUILDING CODE COMPLIANCE OFFICE
ACCEPTANCE NO. 01-0614.08

KNEZEVICH & ASSOCIATES, INC.
CONSULTING ENGINEERS • PRODUCT TESTING
1260 N. UNIVERSITY DRIVE, SUITE 180 • FORT LAUDERDALE, FL 33322
TEL: (954) 382-2800 • FAX: (954) 382-2989 • FLORIDA COA #3205
WEBSITE: WWW.KNEZEVICH.COM • E-MAIL: KA@KNEZEVICH.COM

COPYRIGHT © 2001 KNEZEVICH & ASSOCIATES, INC.

6.8/HR SYSTEM LICENSED BY SOUTHERN SHUTTER ASSOCIATION

6.8-HR ACCORDION SHUTTER

PETROLEUM EQUIPMENT MANUFACTURING COMPANY, INC.
2185 W. 76th STREET • HIALEAH, FL 33016
PHONE:(305) 558-9911 • FAX:(305) 558-9282

VJ. KNEZEVICH
PROFESSIONAL ENGINEER
FL License No: PE 0010983

MAY 25 2001

revisions			
no	date	by	description
1	03/19/99	VJK	COUNTY COMMENTS
2	04/13/00	WK	GENERAL REVISIONS
3	06/22/00	VJK	ADD HR ACCORDION SYSTEM
4	12/27/00	VJK	COUNTY COMMENTS
5	02/05/01	AS	GENERAL REVISIONS
6	02/08/01	AS	COUNTY COMMENTS

SSA I.D. #0524019825 4D

date 12/08/98
scale AS NOTED
drawn by AV
design by VJK
checked by VJK
drawing no. 01-859
sheet 10 of 11

HR ACCORDION SHUTTER
NOT APPLICABLE TO 6.8 ACCORDION SHUTTER

TABLE 4 — MINIMUM SHUTTER SEPARATION FROM GLASS

POSITIVE DESIGN LOAD (W) (P.S.F.)	ACTUAL SHUTTER SPAN (L) (FT. - IN)	MIN. SEPARATION FROM GLASS FOR INSTALLATIONS LESS THAN OR EQUAL TO 30' ABOVE GRADE (IN.)	MIN. SEPARATION FROM GLASS FOR INSTALLATIONS GREATER THAN 30' ABOVE GRADE (IN.)
40.0	9-0	2-1/2	1-3/4
	11-0	2-1/2	2-1/8
	14-4	3-1/4	3-1/4
50.0	9-0	2-1/2	1-7/8
	11-0	2-1/2	2-1/4
	13-6	3-1/4	3-1/4
60.0	9-0	2-1/2	1-7/8
	11-0	2-1/2	2-3/8
	12-11	3-1/4	3-1/4
70.0	9-0	2-1/2	2
	11-0	2-1/2	2-1/2
	12-4	3-1/4	3-1/4
80.0	9-0	2-1/2	2
	11-0	2-3/4	2-3/4
	11-11	3-1/8	3-1/8
90.0	9-0	2-1/2	2
	11-0	2-7/8	2-7/8
	11-5	3-1/8	3-1/8
100.0	9-0	2-1/2	2-1/8
	10-0	2-1/2	2-1/2
	11-1	3-1/8	3-1/8
110.0	9-0	2-1/2	2-1/4
	10-0	2-5/8	2-5/8
	10-9	3	3
120.0	9-0	2-1/2	2-1/4
	10-0	2-3/4	2-3/4
	10-5	3	3

TABLE 3 NOTES:

1. DETERMINE BOTH THE POSITIVE AND THE NEGATIVE WIND LOADS. CHECK THEIR RESPECTIVE SPANS AND USE THE LESSER VALUE OF THE TWO.
2. FOR DESIGN LOADS BETWEEN TABULATED VALUES USE NEXT HIGHER LOAD OR LINEAR INTERPOLATION MAY BE USED TO DETERMINE ALLOWABLE SPANS.

TABLE 4 NOTE:

1. ENTER TABLE 4 WITH POSITIVE DESIGN LOAD TO DETERMINE MIN. STORM SHUTTER SEPARATION FROM GLASS.

TABLE 3 — ACCORDION SHUTTER SPAN SCHEDULE FOR ALL MOUNTING CONDITIONS

DESIGN WIND LOAD W (P.S.F.)	POSITIVE WIND LOAD	NEGATIVE WIND LOAD
	L max. (FT-IN)	L max. (FT-IN)
32.5	15-2	15-6
40.0	14-4	15-6
50.0	13-6	15-6
60.0	12-10	15-6
70.0	12-4	15-6
80.0	11-10	15-2
90.0	11-5	14-3
100.0	11-1	13-7
110.0	10-9	12-8
120.0	10-5	11-7
150.0	9-8	10-10
160.0	9-6	10-2
170.0	9-3	9-6
179.1	9-1	9-1
186.4	9-0	9-0
190.0	8-9	8-9
200.0	8-4	8-4
210.0	7-11	7-11
220.0	7-7	7-7
230.0	7-3	7-3

APPROVED AS COMPLYING WITH THE
SOUTH FLORIDA BUILDING CODE
DATE 08/10/2001
BY Henry A. Mehr
PRODUCT CONTROL DIVISION
BUILDING CODE COMPLIANCE OFFICE
ACCEPTANCE NO. 01-0614.08

KNEZEVICH & ASSOCIATES, INC.
CONSULTING ENGINEERS • PRODUCT TESTING
1260 N. UNIVERSITY DRIVE, SUITE 180 • FORT LAUDERDALE, FL 33322
TEL: (954) 382-2800 • FAX: (954) 382-2989 • FLORIDA COA #3205
WEBSITE: WWW.KNEZEVICH.COM • E-MAIL: KA@KNEZEVICH.COM
COPYRIGHT © 2001 KNEZEVICH & ASSOCIATES, INC.
6.8/HR SYSTEM LICENSED BY SOUTHERN SHUTTER ASSOCIATION

6.8-HR ACCORDION SHUTTER

PEMCO
PETROLEUM EQUIPMENT MANUFACTURING COMPANY, INC.
2185 W. 76th STREET • HIALEAH, FL 33016
PHONE: (305) 558-9911 • FAX: (305) 558-4282

V.J. KNEZEVICH
PROFESSIONAL ENGINEER
FL License No:
PE 0010983
MAY 25 2001

revisions

no	date	by	description
1	03/19/99	VJK	COUNTY COMMENTS
2	04/13/00	JWK	GENERAL REVISIONS
3	06/22/00	VJK	ADD HR ACCORDION SYSTEM
4	12/27/00	VJK	COUNTY COMMENTS
5	02/05/01	AS	GENERAL REVISIONS
6	02/08/01	AS	COUNTY COMMENTS

SSA I.D. #05240198254D

date 12/08/98
scale AS NOTED
drawn by AV
design by VJK
checked by VJK
drawing no. 01-859
sheet 11 of 11