MIAMI-DADE COUNTY, FLORIDA
METRO-DADE FLAGLER BUILDING

BUILDING CODE COMPLIANCE OFFICE
METRO-DADE FLAGLER BUILDING
140 WEST FLAGLER STREET, SUITE 1603
MIAMI, FLORIDA 33130-1563
(305) 375-2901 FAX (305) 375-2908

CONTRACTOR LICENSING SECTION
(305) 375-2527 FAX (305) 375-2558

CONTRACTOR ENFORCEMENT DIVISION
(305) 375-2966 FAX (305) 375-2908

PRODUCT CONTROL DIVISION
(305) 375-2902 FAX (305) 372-6339

PRODUCT CONTROL NOTICE OF ACCEPTANCE

Pozzi Window Company
62845 Boyd Acres Rd. (P.O. Box 5249)
Bend ,OR 97701

Your application for Notice of Acceptance (NOA) of:
Series "C3672 SGW" Outswing Aluminum Clad Wood Casement Window
under Chapter 8 of the Code of Miami-Dade County governing the use of Alternate Materials and Types of Construction, and completely described herein, has been recommended for acceptance by the Miami-Dade County Building Code Compliance Office (BCCO) under the conditions specified herein.

This NOA shall not be valid after the expiration date stated below. BCCO reserves the right to secure this product or material at any time from a jobsite or manufacturer's plant for quality control testing. If this product or material fails to perform in the approved manner, BCCO may revoke, modify, or suspend the use of such product or material immediately. BCCO reserves the right to revoke this approval, if it is determined by BCCO that this product or material fails to meet the requirements of the South Florida Building Code.

The expense of such testing will be incurred by the manufacturer.

ACCEPTANCE NO.: 01-0620.06
EXPIRES: 09/30/2006

Raul Rodriguez
Chief Product Control Division

THIS IS THE COVERSHEET, SEE ADDITIONAL PAGES FOR SPECIFIC AND GENERAL CONDITIONS
BUILDING CODE & PRODUCT REVIEW COMMITTEE

This application for Product Approval has been reviewed by the BCCO and approved by the Building Code and Product Review Committee to be used in Miami-Dade County, Florida under the conditions set forth above.

Francisco J. Quintana, R.A.
Director
Miami-Dade County
Building Code Compliance Office

APPROVED: 08/30/2001

Pozzi Window Company

ACCEPTANCE No.: **01-0620.06**

APPROVED : AUG 3 0 2001

EXPIRES : **September 30, 2006**

NOTICE OF ACCEPTANCE: SPECIFIC CONDITIONS

1. SCOPE

1.1 This **renews** the Notice of Acceptance No. **98-1008.05**, which was issued on February 18, 1999. It approves an outswing aluminum clad wood casement window, as described in Section 2 of this Notice of Acceptance, designed to comply with the South Florida Building Code (SFBC), 1994 Edition for Miami-Dade County, for the locations where the pressure requirements, as determined by SFBC Chapter 23, do not exceed the Design Pressure Rating values indicated in the approved drawings.

2. PRODUCT DESCRIPTION

2.1 The **Series "C3672 SGW" Outswing Aluminum Clad Wood Casement Window (Single Glass)** and its components shall be constructed in strict compliance with the following documents: Drawing No **CC-5**, Sheets 1 thru 5 of 5, titled "Pozzi Aluminum Clad Wood Casement Windows Up To 36" x 72" w/Nailing Fin" prepared by R. W. Building Consultants, Inc., dated 11/12/98, with revision #3 dated 0717/01, bearing the Miami-Dade County Product Control approval stamp with the Notice of Acceptance number and approval date by the Miami-Dade County Product Control Division. These documents shall hereinafter be referred to as the approved drawings.

3. LIMITATIONS

3.1 This approval applies to single unit applications only, as shown in approved drawings.

4. INSTALLATION

4.1 The outswing aluminum clad wood casement window and its components shall be installed in strict compliance with the approved drawings.

4.2 Hurricane protection system (shutters): the installation of this unit **will require** a hurricane protection system.

5. LABELING

5.1 Each unit shall bear a permanent label with the manufacturer's name or logo, city, state and following statement: "Miami-Dade County Product Control Approved".

6. BUILDING PERMIT REQUIREMENTS

6.1 Application for building permit shall be accompanied by copies of the following:

- **6.1.1** This Notice of Acceptance
- **6.1.2** Duplicate copies of the approved drawings, as identified in Section 2 of this Notice of Acceptance, clearly marked to show the components selected for the proposed installation.
- **6.1.3** Any other documents required by the Building Official or the South Florida Building Code (SFBC) in order to properly evaluate the installation of this system.

Manuel Perez

Manuel Perez, P.E. Product Control Examiner
Product Control Division

Pozzi Window Company

ACCEPTANCE No.: 01-0620.06

APPROVED : AUG 3 0 2001

EXPIRES : September 30, 2006

NOTICE OF ACCEPTANCE: STANDARD CONDITIONS

1. Renewal of this Acceptance (approval) shall be considered after a renewal application has been filed and the original submitted documentation, including test supporting data, engineering documents, are no older than eight (8) years.

2. Any and all approved products shall be permanently labeled with the manufacturer's name, city, state, and the following statement: "Miami-Dade County Product Control Approved", or as specifically stated in the specific conditions of this Acceptance.

3. Renewals of Acceptance will not be considered if:
   a) There has been a change in the South Florida Building Code affecting the evaluation of this product and the product is not in compliance with the code changes;
   b) The product is no longer the same product (identical) as the one originally approved;
   c) If the Acceptance holder has not complied with all the requirements of this acceptance, including the correct installation of the product;
   d) The engineer who originally prepared, signed and sealed the required documentation initially submitted is no longer practicing the engineering profession.

4. Any revision or change in the materials, use, and/or manufacture of the product or process shall automatically be cause for termination of this Acceptance, unless prior written approval has been requested (through the filing of a revision application with appropriate fee) and granted by this office.

5. Any of the following shall also be grounds for removal of this Acceptance:
   a) Unsatisfactory performance of this product or process.
   b) Misuse of this Acceptance as an endorsement of any product, for sales, advertising or any other purpose.

6. The Notice of Acceptance number preceded by the words Miami-Dade County, Florida, and followed by the expiration date may be displayed in advertising literature. If any portion of the Notice of Acceptance is displayed, then it shall be done in its entirety.

7. A copy of this Acceptance as well as approved drawings and other documents, where it applies, shall be provided to the user by the manufacturer or its distributors and shall be available for inspection at the job site at all time. The engineer need not reseal the copies.

8. Failure to comply with any section of this Acceptance shall be cause for termination and removal of Acceptance.

9. This Notice of Acceptance consists of pages 1, 2 and this last page 3.

END OF THIS ACCEPTANCE

Manuel Perez

Manuel Perez, P. E., Product Control Examiner
Product Control Division

POZZI WINDOW COMPANY

ALUMINUM CLAD WOOD CASEMENT WINDOWS
W/NAILING FLANGE, SERIES "C3672 SGW

GENERAL NOTES

1. THIS PRODUCT IS DESIGNED TO MEET THE SOUTH FLORIDA BUILDING CODE 1994 EDITION FOR MIAMI–DADE COUNTY.
2. WOOD BUCKS BY OTHERS, MUST BE ANCHORED PROPERLY TO TRANSFER LOADS TO THE STRUCTURE.
3. PRODUCT ANCHORS SHALL BE AS LISTED AND SPACED AS SHOWN ON DETAILS. ANCHOR EMBEDMENT TO BASE MATERIAL SHALL BE BEYOND WALL DRESSING OR STUCCO.
4. MIAMI–DADE APPROVED IMPACT RESISTANT SHUTTERS ARE REQUIRED.
5. FOR DESIGN PRESSURE RATING SEE CHART THIS PAGE:

CASEMENT WINDOW CONSTRUCTION

(Common to all conditions)

Wood Frame Construction: The wood frame is 1.21875" x 3.3125" max. Finger Jointed Ponderosa Pine. The corners are coped, butted and sealed. Each corner is fastened with (2) 2.0" x .375" W. staples and (1) corner key. A wood frame extension of Clear Pine .65625" x 1.375" is attached to the head, sill and jambs on the interior with 15ga. x 2" L. finish nails.

Wood Sash Construction: The wood sash is 1.484" x 2.094" max. Clear Pine. The corners are coped, butted and sealed. Each corner is fastened with (1) #8 x 1 3/4" brass Phillips Flathead Wood Screw.

Aluminum Cladding: Custom extrusions of 6063–T5 aluminum 1.773" x .718" x .055" thk. wall or 1.764" x 0.718" x .055" thk. wall, for the frame. The sash is clad with a roll formed 3105–H15 .019" thk. coiled aluminum stock .350" x 1.537".

Window Construction: The aluminum cladding is tongue and groove fit to the wood frame with mitered corners and secured with (2) #6 x 2" screws per corner. It is secured to the wood frame with .375" W. x 1" L. wire staples spaced at 24" O.C. An aluminum dripcap/nailing flange is snap fitted to the head of the window and a PVC nailing flange is snap fitted to the jambs and sill.

Glazing Method: 3/16" or 1/4" Annealed glass By Glasslam The interior and exterior are both glazed with Dow Corning 1199. The interior side has a wood glass stop attached to the frame with 3/16" x 3/4" wire staples at 2" in from the corners and 12" O.C.

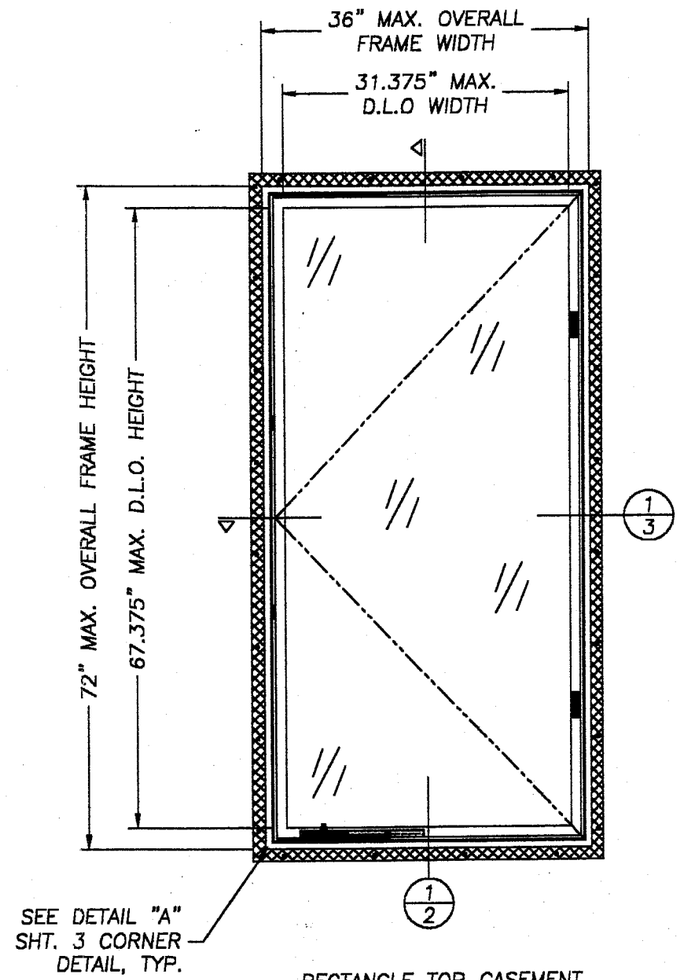

RECTANGLE TOP CASEMENT

TABLE OF CONTENTS	
SHEET #	DESCRIPTION
1	GENERAL NOTES AND TYPICAL ELEVATION
2	VERTICAL CROSS SECTION & BILL OF MATERIALS
3	HORIZONTAL CROSS SECTION & DETAIL "A"
4	ANCHORING LOCATIONS, GLAZING DETAIL & HARDWARE
5	UNIT COMPONENTS

DESIGN PRESSURE RATING ALL MODELS SHOWN		
GLAZING TYPE & SQUARE FEET	WHERE WATER INFILTRATION REQUIREMENT IS NEEDED	
3/16" THK. ANNEALED GLASS UP TO 10.94 sq. ft.	+45.33 psf	−45.33 psf
1/4" THK. ANNEALED GLASS UP TO 14.68 sq. ft.	+45.33 psf	−45.33 psf

APPROVED AS COMPLYING WITH THE SOUTH FLORIDA BUILDING CODE
DATE AUG 3 0 2001
BY Manuel Perez
PRODUCT CONTROL DIVISION
BUILDING CODE COMPLIANCE OFFICE
ACCEPTANCE NO. 01-0620.06

POZZI WINDOW COMPANY
62845 BOYD ACRES RD.
BEND, OREGON 97701
PH. 541.382.4411

PRODUCT: POZZI ALUMINUM CLAD WOOD CASEMENT WINDOWS UP TO 36" x 72" W/NAILING FIN

PART OR ASSEMBLY: GENERAL NOTES & TYPICAL ELEVATION

REVISIONS

NO.	DATE		BY
3	07/17/01	COMPLY W/ASTM E 1300	TJH
2	06/15/01	GENERAL REVISION	TJH
1	01/14/99	GENERAL REVISION	–

RW BUILDING CONSULTANTS, INC.
813.684.3831

DATE: 11/12/98
SCALE: N.T.S.
DWG. BY: C.A.B.
CHK. BY:
DRAWING NO.: CC–5
SHEET 1 OF 5

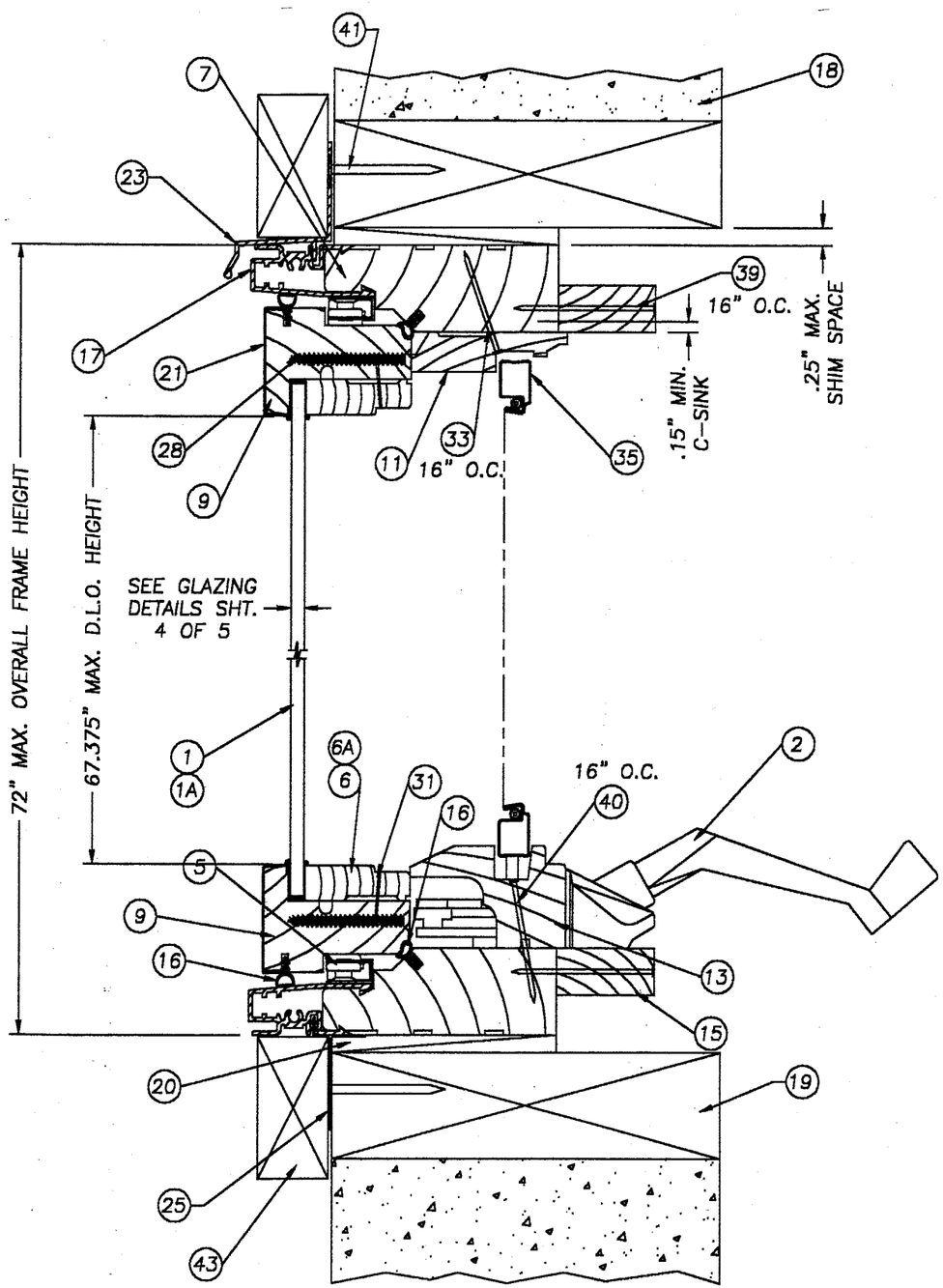

1/2 VERTICAL CROSS SECTION

Item	Description	Material
1	GLAZING 3/16" THK. ANNEALED BY GLASSLAM	–
1A	GLAZING 1/4" THK. ANNEALED BY GLASSLAM	–
2	OPERATOR W/HANDLE & COVER (15-94 TRUTH HARDWARE)	–
3	SASH TRACK (30706 TRUTH HARDWARE .050" WALL)	STEEL
4	SASH LOCK & KEEPER (16-18 TRUTH HARDWARE)	–
5	SASH HINGE (14-75 TRUTH HARDWARE)	–
6	GLASS STOP WOOD FOR 3/16" THK. GLASS (AC-162 BEND MILLWORKS)	FINGER J. PINE
6A	GLASS STOP WOOD FOR 1/4" THK. GLASS (AC-162 BEND MILLWORKS)	FINGER J. PINE
7	HEAD & SILL WOOD FRAME (AC-2 BEND MILLWORKS)	FINGER J. PINE
8	SIDE WOOD FRAME (AC-4 BEND MILLWORKS)	FINGER J. PINE
9	WOOD TOP & BOTTOM RAIL (AC-160 BEND MILLWORKS)	CLEAR PINE
10	WOOD STILE (AC-161 BEND MILLWORKS)	CLEAR PINE
11	HEAD SCREEN STOP (DC-5 BEND MILLWORKS)	CLEAR PINE
12	SIDE SCREEN STOP (DC-7 BEND MILLWORKS)	CLEAR PINE
13	OPERATOR COVER (DC-22 BEND MILLWORKS)	CLEAR PINE
14	INT. MULL COVER (AC-6 BEND MILLWORKS)	CLEAR PINE
15	STRAIGHT JAMB EXTENSION (AC-11 BEND MILLWORKS)	CLEAR PINE
16	1/4" VINYL BULB WEATHERSTRIP (AB-200 INTEK)	VINYL
17	FRAME METAL CLADDING ALUM. (AC-18 ANODIZING INC.)	6063-T5
18	MASONRY WALL	CONC.
19	2x WOOD BUCK	WOOD
20	1/4" SHIM	–
21	SASH ROLL FORMED RAIL ALUM. CLADDING (AC-46 NICHOLS-HOMESHIELD)	3105 H-15
22	SASH ROLL FORMED STILE ALUM. CLADDING (AC-45 NICHOLS-HOMESHIELD)	3105 H-15
23	ALUM. DRIP CAP (AC-172 ANODIZING INC.)	6063-T5
24	ALUM. EXT. MULL COVER (AC-220 ANODIZING INC.)	6063-T5
25	PVC NAILING FIN (AC-35 PLASTIC PROFILES INC.)	PVC
26	ALUM. FRAME CORNER KEY (AC-74 MITCHELL METALS)	6061-T6511
27	#6 x 2" PHILLIPS WOOD SCREW (CRONIN FASTENERS)	STEEL
28	#8 x 1 3/4" PHILLIPS WOOD SCREW (CRONIN FASTENERS)	BRASS
29	#8 x 2" PHILLIPS WOOD SCREW (CRONIN FASTENERS)	BRASS
30	3/8" x 1" WIRE STAPLES (CRONIN FASTENERS)	STEEL
31	3/16" x 3/4" WIRE STAPLES (STANLEY/BOSTITCH)	STEEL
32	3/8" x 2" WIRE STAPLES (STANLEY/BOSTITCH)	STEEL
33	15 GA. x 1 1/2" FINISH NAIL (STANLEY/BOSTITCH)	STEEL
34	GLAZING COMPOUND DOW CORNING SILICONE #1199	SILICONE
35	SCREEN ASSEMBLY (POZZI WINDOWS MFG.)	–
36	1/16" FRAME GASKET (DERBY)	–
37	#8 x 2 1/4" GALVANIZED PHILLIPS FLATHEAD WOOD SCREW	STEEL
38	1/4" x 4" TAPCON	STEEL
39	15 GA. x 2" FINISH NAIL	STEEL
40	15 GA. x 1 3/4" FINISH NAIL	STEEL
41	1 5/8" ROOFING NAIL	STEEL
42	SASH SNUBBER (10390 TRUTH HARDWARE .060" WALL)	STEEL
43	1" x 2" TRIM	–

POZZI WINDOW COMPANY
62845 BOYD ACRES RD.
BEND, OREGON 97701
PH. 541.382.4411

PRODUCT: POZZI ALUMINUM CLAD WOOD CASEMENT WINDOWS UP TO 36" x 72" W/NAILING FIN

PART OR ASSEMBLY: VERTICAL CROSS SECTION

REVISIONS

NO.	DATE		BY
3	07/17/01	COMPLY W/ASTM E 1300	TJH
2	06/15/01	GENERAL REVISION	TJH
1	01/14/99	GENERAL REVISION	–

RW BUILDING CONSULTANTS, INC.
813.684.3831

APPROVED AS COMPLYING WITH THE SOUTH FLORIDA BUILDING CODE
DATE AUG 30 2001
BY Manuel Perez
PRODUCT CONTROL DIVISION
BUILDING CODE COMPLIANCE OFFICE
ACCEPTANCE NO. 01-0620.06

DATE: 11/12/98
SCALE: 1/2" = 1"
DWG. BY: C.A.B.
CHK. BY:
DRAWING NO.: CC-5
SHEET 2 OF 5

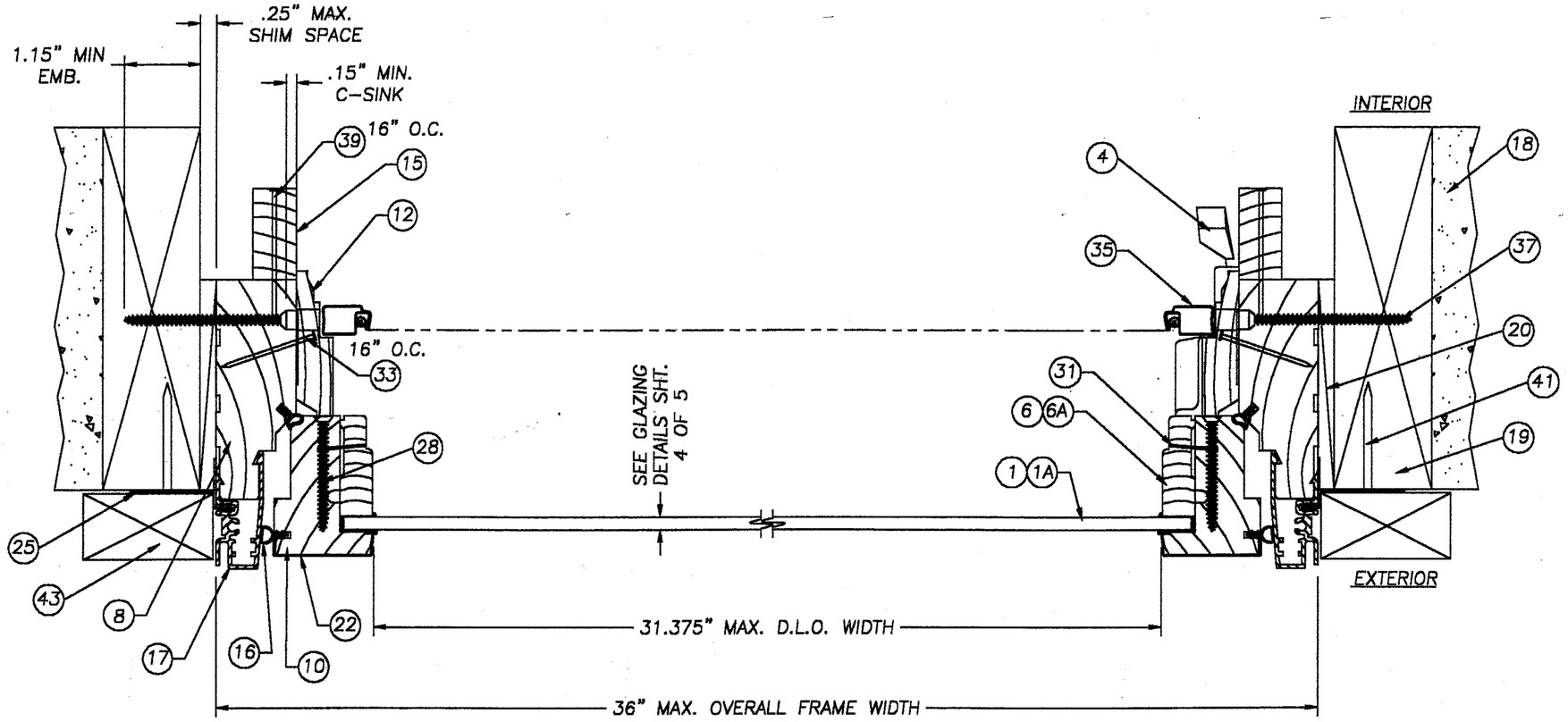

1/3 HORIZONTAL CROSS SECTION

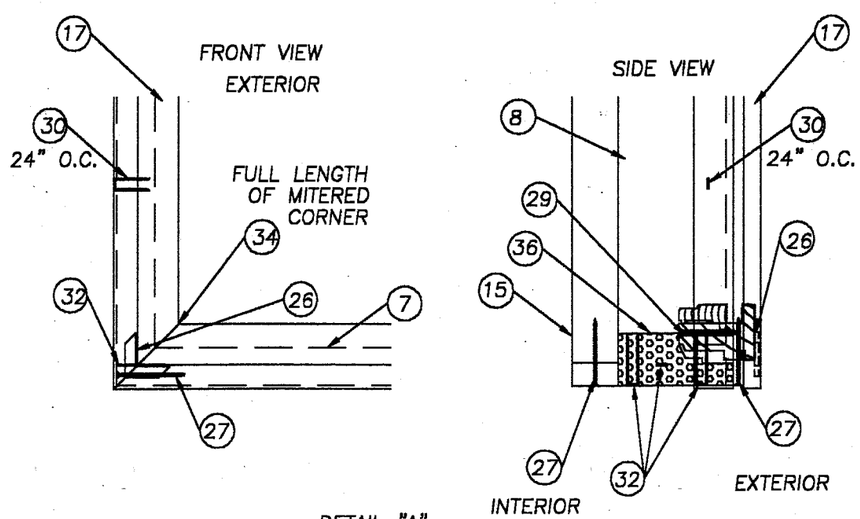

DETAIL "A"
TYP. CORNER DETAIL
N.T.S.

APPROVED AS COMPLYING WITH THE SOUTH FLORIDA BUILDING CODE
DATE AUG 30 2001
BY Manuel Perez
PRODUCT CONTROL DIVISION
BUILDING CODE COMPLIANCE OFFICE
ACCEPTANCE NO. 01-0620.06

POZZI WINDOW COMPANY
62845 BOYD ACRES RD.
BEND, OREGON 97701
PH. 541.382.4411

PRODUCT: POZZI ALUMINUM CLAD WOOD CASEMENT WINDOWS UP TO 36" x 72" W/NAILING FIN

PART OR ASSEMBLY: HORIZONTAL X-SECTION & DETAIL "A"

REVISIONS

NO.	DATE		BY
3	07/17/01	COMPLY W/ASTM E 1300	TJH
2	06/15/01	GENERAL REVISION	TJH
1	01/14/99	GENERAL REVISION	–

RW BUILDING CONSULTANTS, INC.
813.684.3831

DATE: 11/12/98
SCALE: 1/2" = 1"
DWG. BY: C.A.B.
CHK. BY:
DRAWING NO.: CC-5
SHEET 3 OF 5

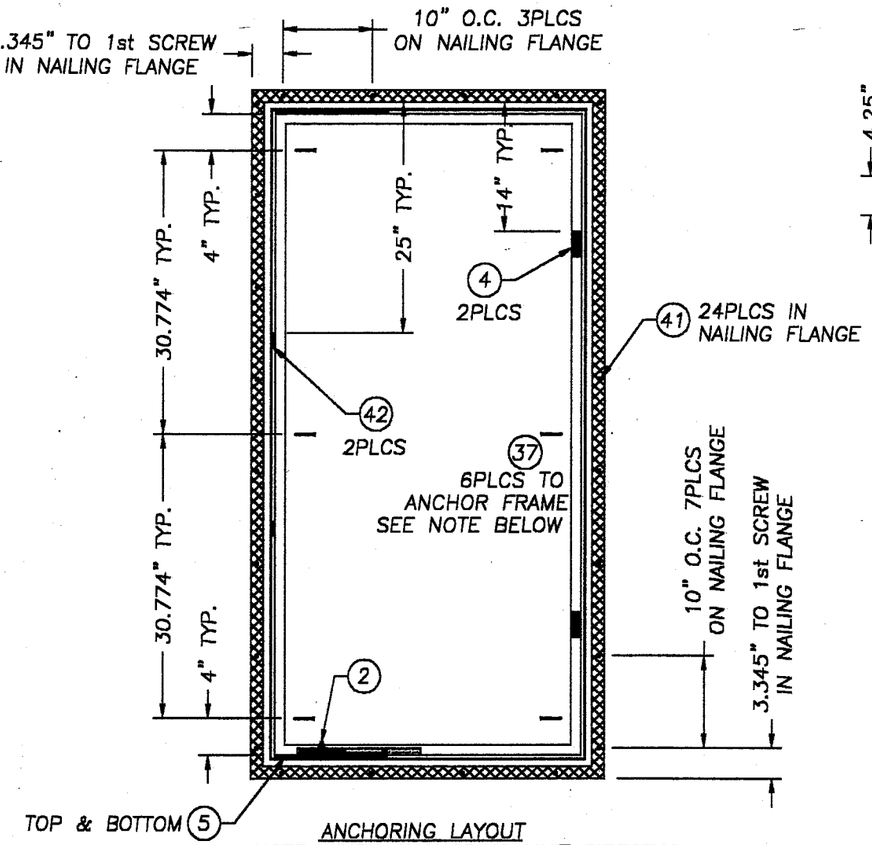

ANCHORING LAYOUT
NOTE: WHEN ANCHORING UNIT DIRECTLY TO MASONRY REPLACE ITEM #37 WITH ITEM #38 1/4" x 4" TAPCON.

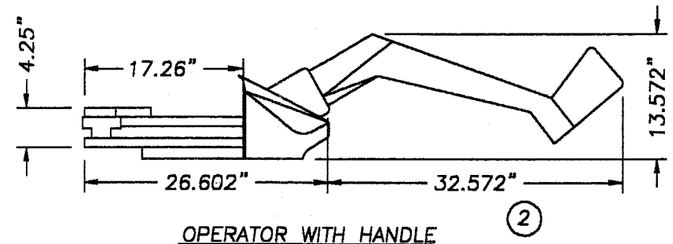

OPERATOR WITH HANDLE
TRUTH #15-94, DIE-CAST ZINC BASE, CRANK HANDLE AND KNOB. HARDENED STEEL WORM AND GEAR. HIGH STRENGTH PLASTIC COVER

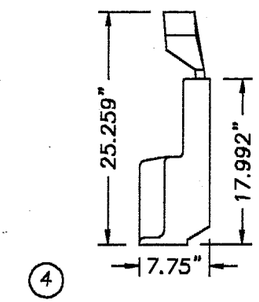

SASH LOCK TRUTH #16-18
DIE-CAST ZINC HANDLE AND CASE STEEL BACK PLATE AND LOCKING CAM

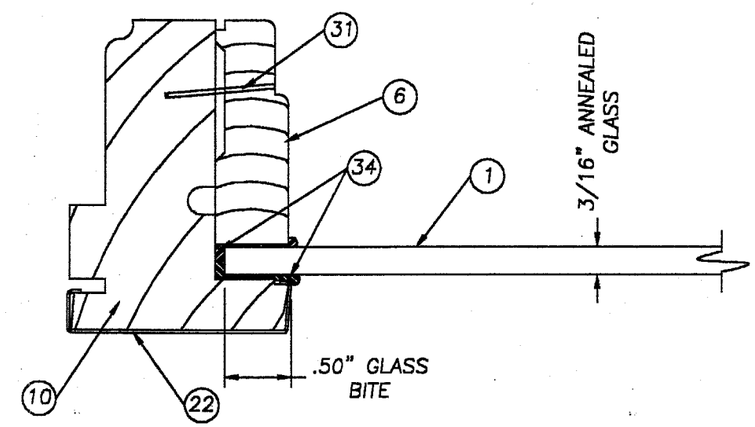

GLAZING DETAIL 3/16" ANNEALED GLASS

NOTE:
THE ABOVE GLASS CONFIGURATION CAN BE USED UP TO A MAXIMUM DAYLIGHT OPENING OF 10.94 SQUARE FEET.

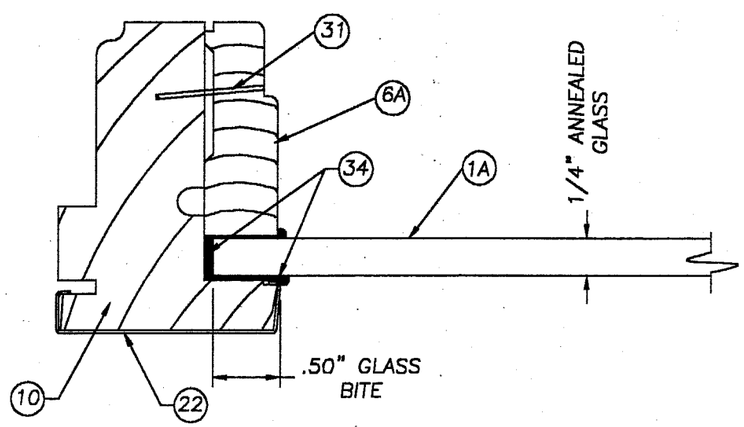

GLAZING DETAIL FOR 1/4" ANNEALED GLASS

NOTE:
THE ABOVE GLASS CONFIGURATION CAN BE USED UP TO A MAXIMUM DAYLIGHT OPENING OF 14.68 SQUARE FEET.

APPROVED AS COMPLYING WITH THE SOUTH FLORIDA BUILDING CODE
DATE AUG 30 2001
BY Manuel Perez
PRODUCT CONTROL DIVISION
BUILDING CODE COMPLIANCE OFFICE
ACCEPTANCE NO. 01-0620.06

POZZI WINDOW COMPANY
62845 BOYD ACRES RD.
BEND, OREGON 97701
PH. 541.382.4411

PRODUCT: POZZI ALUMINUM CLAD WOOD CASEMENT WINDOWS UP TO 36" x 72" W/NAILING FIN

PART OR ASSEMBLY: ANCHORING LOCATIONS, GLAZING DETAIL & HARDWARE

REVISIONS

NO.	DATE		BY
3	07/17/01	COMPLY W/ASTM E 1300	TJH
2	06/15/01	GENERAL REVISION	TJH
1	01/14/99	GENERAL REVISION	–

RW BUILDING CONSULTANTS, INC.
813.684.3831

DATE: 11/12/98
SCALE: N.T.S.
DWG. BY: C.A.B.
CHK. BY:
DRAWING NO.: CC-5
SHEET 4 OF 5

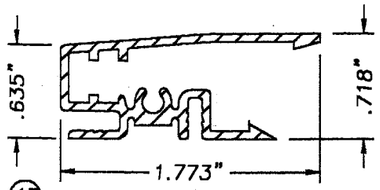

(17) AC-18 FRAME METAL
6063-T5 ALUMINUM .055" WALL

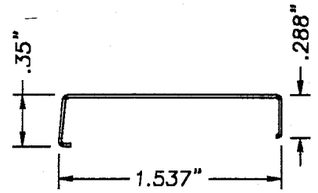

(22) AC-45 & 46 (21)
ROLL FORMED SASH CLADDING
COILED ALUMINUM STOCK 3105-H15
.019 TYP. WALL

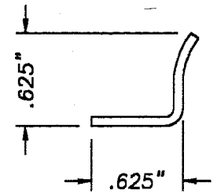

(42) SASH SNUBBER
TRUTH #10390
.060" WALL STEEL

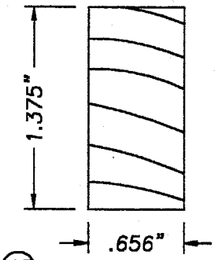

(15) AC-11 JAMB EXTENSION
CLEAR PIN

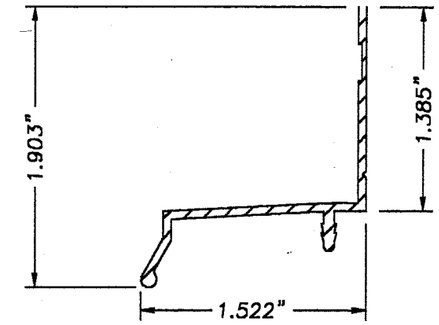

(23) AC-172 DRIP CAP
6063-T5 ALUMINUM .055" WALL

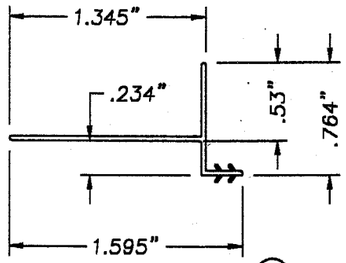

AC-35 NAIL FIN (25)
EXTRUDED PVC .030" WALL

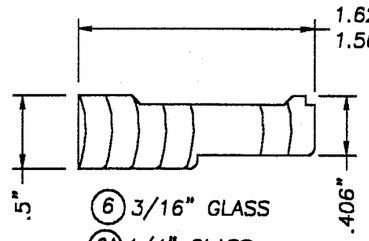

AC-162 GLASS STOP
FINGER JOINTED PIN

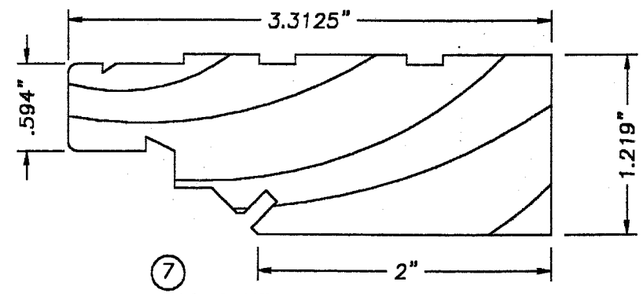

(7) AC-2 HEAD & SILL WOOD FRAME
(8) AC-4 SIDE WOOD FRAME
FINGER JOINTED PIN

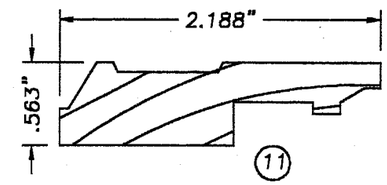

(11) DC-5 HEAD SCREEN STOP
CLEAR PIN

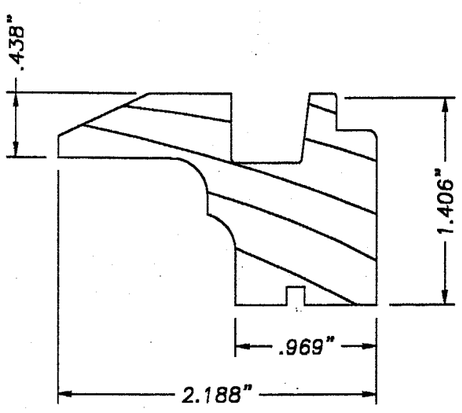

DC-22 OPERATOR COVER
CLEAR PIN (13)

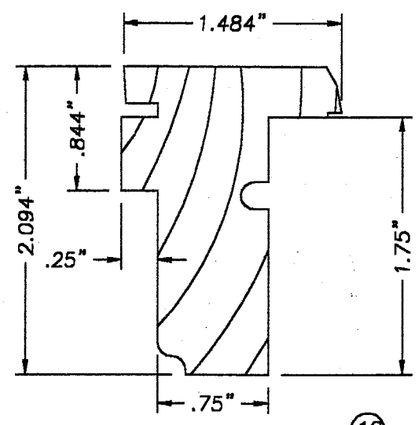

AC-161 SASH STILE (10)
(9) AC-160 SASH TOP & BOTTOM RAIL
CLEAR PIN

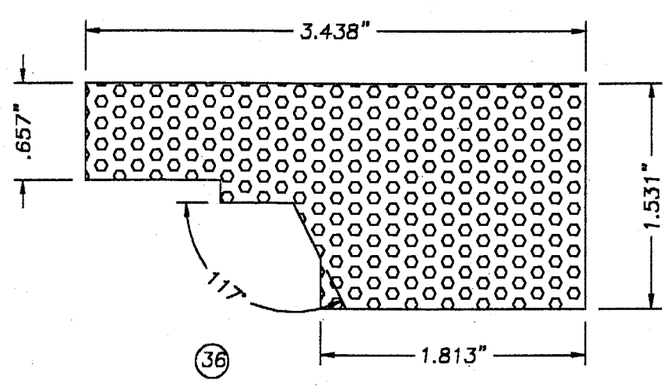

(36) 1/16" CLOSED CELL FOAM FRAME GASKET

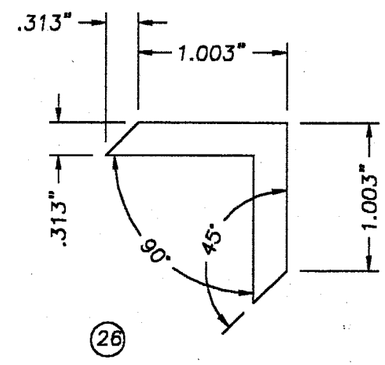

(26) AC-74 FRAME CORNER KEY
ALUM. ALLOY 6061-T6511
.125" THK.

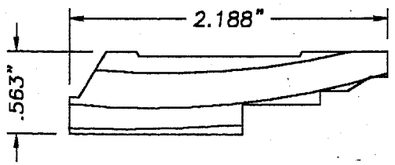

DC-7 SIDE SCREEN STOP
CLEAR PIN (12)

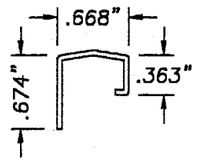

SASH OPERATING TRACK
TRUTH #30706
.050" WALL STEEL (3)

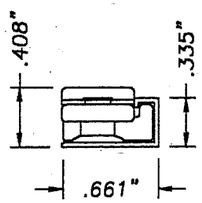

(5) SASH HINGE TRUTH #14-75
10" LONG STEEL TRACK & ARMS
WITH STAINLESS STEEL INSERT INSIDE
DELRIN SLIDE SHOE WITH A BRASS
POST & LOCKING SNAP RING

APPROVED AS COMPLYING WITH THE
SOUTH FLORIDA BUILDING CODE
DATE AUG 30 2001
BY Manuel Serra
PRODUCT CONTROL DIVISION
BUILDING CODE COMPLIANCE OFFICE
ACCEPTANCE NO. 01-0620.06

POZZI WINDOW COMPANY
62845 BOYD ACRES RD.
BEND, OREGON 97701
PH. 541.382.4411

PRODUCT: POZZI ALUMINUM CLAD WOOD CASEMENT WINDOWS UP TO 36" x 72" W/NAILING FLANGE
PART OR ASSEMBLY: UNIT COMPONENTS

REVISIONS

NO.	DATE		BY
3	07/17/01	COMPLY W/ASTM E 1300	TJH
2	06/15/01	GENERAL REVISION	TJH
1	01/14/99	GENERAL REVISION	—

RW BUILDING CONSULTANTS, INC.
813.684.3831

DATE: 11/12/98
SCALE: N.T.S.
DWG. BY: C.A.B.
CHK. BY:
DRAWING NO.: CC-5
SHEET 5 OF 5