MIAMI-DADE

MIAMI-DADE COUNTY, FLORIDA
METRO-DADE FLAGLER BUILDING

BUILDING CODE COMPLIANCE OFFICE
METRO-DADE FLAGLER BUILDING
140 WEST FLAGLER STREET, SUITE 1603
MIAMI, FLORIDA 33130-1563
(305) 375-2901 FAX (305) 375-2908

CONTRACTOR LICENSING SECTION
(305) 375-2527 FAX (305) 375-2558

CONTRACTOR ENFORCEMENT DIVISION
(305) 375-2966 FAX (305) 375-2908

PRODUCT CONTROL DIVISION
(305) 375-2902 FAX (305) 372-6339

PRODUCT CONTROL NOTICE OF ACCEPTANCE

DAB Door Company, Inc.
12195 NW 98 Avenue
Hialeah Gardens ,FL 33018

Your application for Notice of Acceptance (NOA) of:
Section Residential Garage Door
under Chapter 8 of the Code of Miami-Dade County governing the use of Alternate Materials and Types of Construction, and completely described herein, has been recommended for acceptance by the Miami-Dade County Building Code Compliance Office (BCCO) under the conditions specified herein.

This NOA shall not be valid after the expiration date stated below. BCCO reserves the right to secure this product or material at any time from a jobsite or manufacturer's plant for quality control testing. If this product or material fails to perform in the approved manner, BCCO may revoke, modify, or suspend the use of such product or material immediately. BCCO reserves the right to revoke this approval, if it is determined by BCCO that this product or material fails to meet the requirements of the South Florida Building Code.

The expense of such testing will be incurred by the manufacturer.

ACCEPTANCE NO.: 01-0620.10
EXPIRES: 08/14/2006

Raul Rodriguez
Chief Product Control Division

THIS IS THE COVERSHEET, SEE ADDITIONAL PAGES FOR SPECIFIC AND GENERAL CONDITIONS
BUILDING CODE & PRODUCT REVIEW COMMITTEE

This application for Product Approval has been reviewed by the BCCO and approved by the Building Code and Product Review Committee to be used in Miami-Dade County, Florida under the conditions set forth above.

Francisco J. Quintana, R.A.
Director
Miami-Dade County
Building Code Compliance Office

APPROVED: 08/09/2001

DAB Door Company, Inc.

ACCEPTANCE NO: 01-0620.10

APPROVED: AUG 0 9 2001

EXPIRES: 08/14/2006

NOTICE OF ACCEPTANCE: SPECIFIC CONDITIONS

1. SCOPE

1.1 This renews the Notice of Acceptance No. 98-0901.09 which was issued on 10/22/98. It approves a Sectional Steel Door as described in Section 2 of this Notice of Acceptance, designed to comply with the South Florida Building Code, 1994 Edition for Miami-Dade County (SFBCC) for the locations where the pressure requirements, as determined by SFBC Chapter 23, do not exceed the design pressure rating values indicated in the approved drawings.

2. PRODUCT DESCRIPTION

2.1 The **Dab Sectional Door** and its components shall be constructed in strict compliance with the following documents: Drawing No. 98-05, titled "Sectional Residential Garage Door" prepared by Al-Farooq Corporation, dated 02/23/98 with latest revision on 08/24/98, Sheet 1 to 3 of 3. It bears the Miami-Dade County Product Control Approval stamp with the Notice of Acceptance number and approval date by Miami-Dade Product Control Division. These documents shall hereinafter be referred to as the approved drawings.

3. LIMITATIONS

3.1 Units with dimensions equal to or smaller than those shown on the approved drawings shall qualify under this approval.

3.2 This approval requires the manufacturer to do testing of all coils used to fabricate door panels under this Notice of Acceptance. A minimum of 2 specimens shall be cut from each coil and tensile tested according to ASTM E-8 by a Dade County Approved Laboratory selected and paid by the manufacturer. Every 3 months, 4 times a year the manufacturer shall mail to this office a copy of the Test Reports with confirmation that the specimens were selected from coils at the manufacturer's production facilities. And a notarized statement from the manufacturer that only coils with yield strength of 37,000 PSI or more shall be used to make door panels for Dade County under this Notice of Acceptance.

4. INSTALLATION

4.1 The Sectional Door and its components shall be constructed in strict compliance with the approved drawings.

4.2 The installation of this door **does not require** a Hurricane Protection System

5. LABELING

5.1 Each door shall bear a permanent label with the manufacturer's name or logo, city, state and the following statement: "Miami-Dade County Product Control Approved

6. BUILDING PERMIT

6.1 Building Permit shall be accompanied by copies of the following:

6.1.1 This Notice of Acceptance, including two copies of the approved drawings as identified in section 2.

6.1.2 Any other document required by the Building Official or the SFBC in order to properly evaluate the installation of this system.

Candido Font, PE, Sr. Product Control Examiner
Product Control Division

DAB Door Company, Inc.

ACCEPTANCE NO.: 01-0620.10

APPROVED: AUG 0 9 2001

EXPIRES: 08/14/2006

NOTICE OF ACCEPTANCE STANDARD CONDITIONS

1. Renewal of this Acceptance (approval) shall be considered after a renewal application has been filed and the original submitted documentation, including test-supporting data, engineering documents, are no older than eight (8) years.

2. Any and all approved products shall be permanently labeled with the manufacturer's name, city, state, and the following statement: "Miami-Dade County Product Control Approved", or as specifically stated in the specific conditions of this Acceptance.

3. Renewals of Acceptance will not be considered if:
a) There has been a change in the South Florida Building Code affecting the evaluation of this product and the product is not in compliance with the code changes;
b) The product is no longer the same product (identical) as the one originally approved;
c) If the Acceptance holder has not complied with all the requirements of this acceptance, including the correct installation of the product;
d) The engineer who originally prepared, signed and sealed the required documentation initially submitted is no longer practicing the engineering profession.

4. Any revision or change in the materials, use, and/or manufacture of the product or process shall automatically be cause for termination of this Acceptance, unless prior written approval has been requested (through the filing of a revision application with appropriate fee) and granted by this office.

5. Any of the following shall also be grounds for removal of this Acceptance:
a) Unsatisfactory performance of this product or process.
b) Misuse of this Acceptance as an endorsement of any product, for sales, advertising or any other purpose.

6. The Notice of Acceptance number preceded by the words Miami-Dade County, Florida, and followed by the expiration date may be displayed in advertising literature. If any portion of the Notice of Acceptance is displayed, then it shall be done in its entirety.
7. A copy of this Acceptance as well as approved drawings and other documents, where it applies, shall be provided to the user by the manufacturer or its distributors and shall be available for inspection at the job site at all time. The engineer need not reseal the copies.

8. Failure to comply with any section of this Acceptance shall be cause for termination and removal of Acceptance.

9. This Notice of Acceptance consists of pages 1, 2 and this last page 3.

Candido Font, PE, Sr. Product Control Examiner
Product Control Division

END OF THIS ACCEPTANCE

DAB Door Company, Inc.

ACCEPTANCE NO: 01-0620.10

APPROVED: AUG 0 9 2001

EXPIRES: 08/14/2006

NOTICE OF ACCEPTANCE: EVIDENCE SUBMITTED
(For File ONLY. Not part of NOA)

A DRAWINGS

1. Drawing prepared by Al-Farooq Corporation titled "Sectional Residential Garage Door", Drawing No. 98-05 dated 02/23/98 with latest revision on 08/24/98 Sheets 1 to 3 of 3 signed and sealed by Dr. Humayoun Farooq, PE.

B TEST

1. Test Report on Large Missile Impact Test and Cyclic Wind Pressure Test and Uniform Static Air Pressure Test, "Sectional Residential Garage Door" prepared by Hurricane Engineering and Testing Inc. Report #98-713 and 98-714 dated 02/11 & 25/98 signed and sealed by HM Medina, PE.
2. Test Report on Force Entry Test "Sectional Residential Garage Door" prepared by Hurricane Engineering and Testing Inc., Report No. 98-724b, dated 02/20/98, signed and sealed by HM Medina, PE.

C CALCULATIONS

1. Anchor Calculations dated 03/02/98, Sheets 1 of 1 prepared by Al-Farooq Corporation, signed and sealed by H. Farooq, PE

D MATERIAL CERTIFICATION

1 Tensile Test Report No. 98-T77, prepared by Hurricane Engineering Testing dated 03/16/98, signed and sealed by HM Medina, PE.

2 Notice of Acceptance No. 95-0626.01 issued to Apache Products Co., which expires on 01/11/99.

E STATEMENTS

1 Letter of Compliance by Al-Farooq Corporation, dated 03/21/98 signed by H. Farooq, PE.

2 Letter on Non Financial Interest by Al-Farooq Corporation, dated 03/21/98 signed by H. Farooq, PE

3 No change letter issued by DAB Door Company on 06/12/2001, signed by R. Berger and notarized by C. J. Prati.

4 Coils yield strength compliance letter issue by DAB Door Company on 06/06/2001, signed by A. Berger and notarized by C. J. Prati.

Candido Font, PE, Sr. Product Control Examiner
Product Control Division

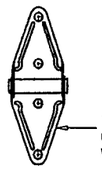

18 GA. GALV. STEEL
CENTER HINGE
W/ (4) # 14 X 1/2" SMS

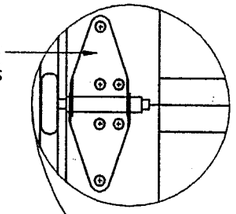

14 GA. GALV. STEEL
END ROLLER HINGE
W/ (6) # 14 X 1/2" SMS

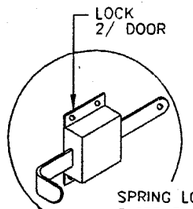

LOCK
2/ DOOR

SPRING LOADED SLIDE BOLT LOCK (BOTH SIDES)
FASTENED W/ (4) # 14 X 5/8" S.M.S.
5/8" MIN. LOCK ENGAGEMENT CONFORMS TO
SFBC 3603.2 REGARDING GARAGE DOORS

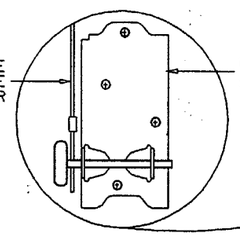

7 X 7 GALV. AIRCRAFT TYPE
CABLE & NICO-PRESS SLEEVE
W/ MIN. 5 TO 1 SAFETY FACTOR

12 GA.
STEEL

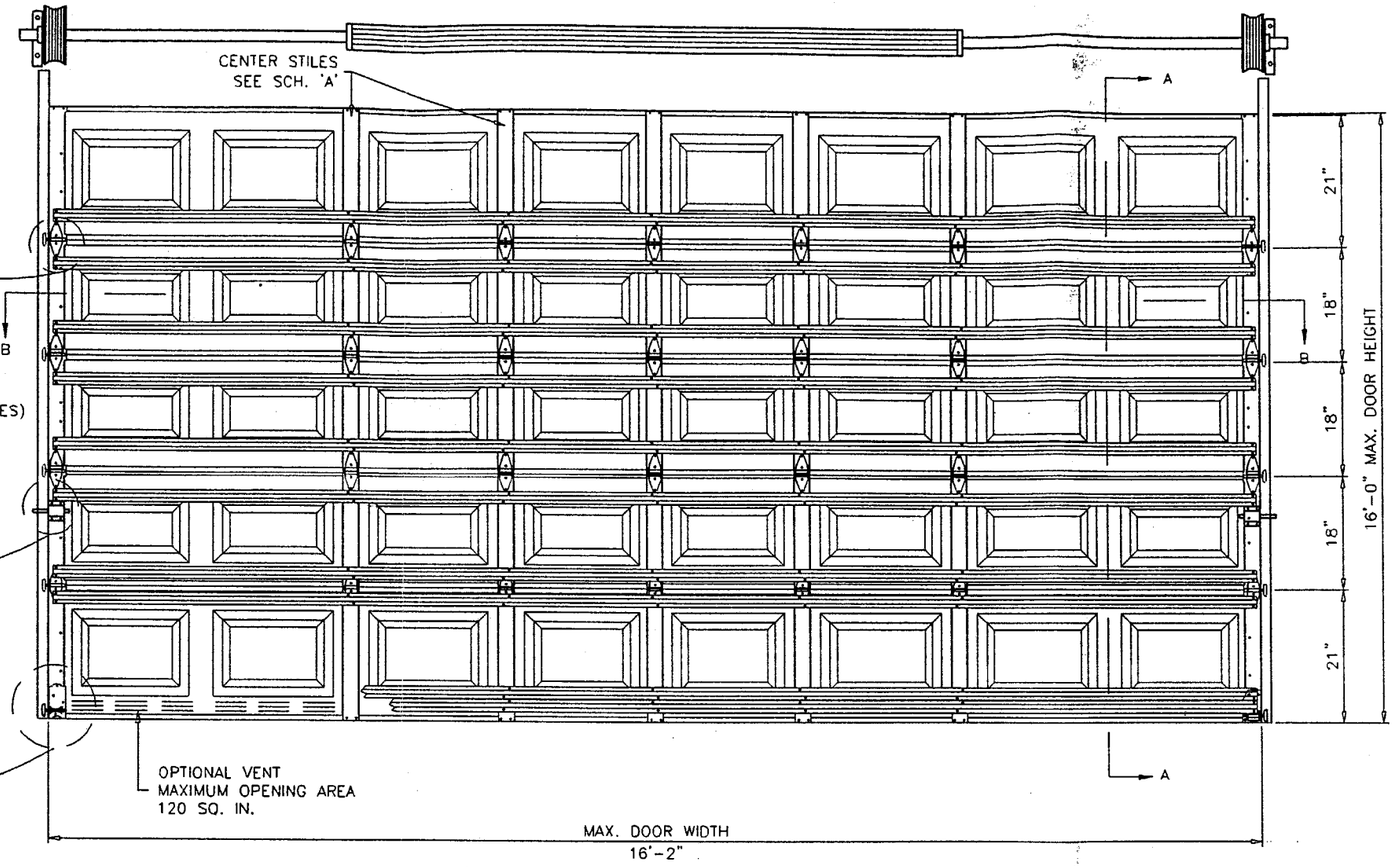

SCHEDULE 'A'

DOOR WIDTHS	# OF CENTER STILES
9'-1" TO 11'-10"	2
12'-0" TO 13'-10"	3
14'-0" TO 15'-10"	4
15'-11" TO 16'-10"	5

DOOR HEIGHT	CONSISTS OF	
6'-6"	2 SECTIONS 18"	2 SECTIONS 21"
6'-9"	1 SECTION 18"	3 SECTIONS 21"
7'	4 SECTIONS 21"	–
7'-3"	–	–
7'-6"	5 SECTIONS 18"	–
7'-9"	4 SECTIONS 18"	1 SECTION 21"
8'	3 SECTIONS 18"	2 SECTIONS 21"
8'-3"	2 SECTIONS 18"	3 SECTIONS 21"
8'-6"	1 SECTION 18"	4 SECTIONS 21"
8'-9"	5 SECTIONS 21"	–
9'	6 SECTIONS 18"	–
9'-3"	5 SECTIONS 18"	1 SECTION 21"
9'-6"	4 SECTIONS 18"	2 SECTIONS 21"
9'-9"	3 SECTIONS 18"	3 SECTIONS 21"
10'	2 SECTIONS 18"	4 SECTIONS 21"
10'-3"	1 SECTION 18"	5 SECTIONS 21"
10'-6"	6 SECTIONS 21"	–
10'-9"	6 SECTIONS 18"	1 SECTION 21"
11'	5 SECTIONS 18"	2 SECTIONS 21"
11'-3"	4 SECTIONS 18"	3 SECTIONS 21"
11'-6"	3 SECTIONS 18"	4 SECTIONS 21"
11'-9"	2 SECTIONS 18"	5 SECTIONS 21"
12'	1 SECTIONS 18"	6 SECTIONS 21"
12'-3"	7 SECTIONS 21"	–
12'-6"	6 SECTIONS 18"	2 SECTIONS 21"
12'-9"	5 SECTIONS 18"	3 SECTIONS 21"
13'	4 SECTIONS 18"	4 SECTIONS 21"
13'-3"	3 SECTIONS 18"	5 SECTIONS 21"
13'-6"	2 SECTIONS 18"	6 SECTIONS 21"
13'-9"	1 SECTION 18"	7 SECTIONS 21"
14'	8 SECTIONS 21"	–
14'-3"	6 SECTIONS 18"	3 SECTIONS 21"
14'-6"	5 SECTIONS 18"	4 SECTIONS 21"
14'-9"	4 SECTIONS 18"	5 SECTIONS 21"
15'	3 SECTIONS 18"	6 SECTIONS 21"
15'-3"	2 SECTIONS 18"	7 SECTIONS 21"
15'-6"	1 SECTION 18"	8 SECTIONS 21"
15'-9"	9 SECTIONS 21"	–
16'	6 SECTIONS 18"	4 SECTIONS 21"

INSIDE ELEVATION

RAISED PANEL EMBOSSED DOOR

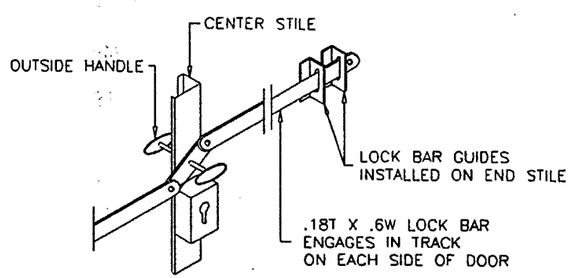

OUTSIDE KEYED LOCK

LOCK BAR LOCKING SHOWN

DAB DOOR MODEL 824
MAX. SIZE 16'-2" WIDE X 16'-0" HIGH

DESIGN PRESSURE RATING = + 48.0 PSF
– 52.0 PSF

THIS DRAWING IS PROPERTY OF DAB DOORS INC.
COPYRIGHT 1998, TRADEMARK PROTECTED
DO NOT REPRODUCE WITHOUT WRITTEN CONSENT.

PATENT PENDING

GENERAL NOTES

1. THIS STRUCTURE IS DESIGNED AS PER THE SOUTH FLORIDA BUILDING CODE 1994 EDITION FOR DADE COUNTY. ALSO FOR WIND LOADS AS PER ASCE 7-88 USING CORRESPONDING LOADS.
2. ANCHORS SHALL BE AS LISTED, SPACED AS SHOWN ON DETAILS. ANCHOR EMBEDMENT TO BASE MATERIAL SHALL BE BEYOND WALL DRESSING OR STUCCO.
3. ALL BOLTS, NUTS AND WASHERS SHALL BE ZINC PLATED CARBON STEEL.
4. ANCHORING OR LOADING CONDITIONS OTHER THAN THOSE SHOWN IN THESE DETAILS ARE NOT PART OF THIS APPROVAL.

Engr: DR. HUMAYOUN FAROOQ
STRUCTURES
FLA. PE # 16557

JUL 12 2001

APPROVED AS COMPLYING WITH THE
SOUTH FLORIDA BUILDING CODE
DATE AUG 09 2001
BY
PRODUCT CONTROL DIVISION
BUILDING CODE COMPLIANCE OFFICE
ACCEPTANCE NO. 01-0620.10

AL-FAROOQ CORPORATION
ENGINEERS, PLANNERS & PRODUCT DESIGN
1235 SW 87 AVE
MIAMI, FLORIDA 33174
TEL. (305) 264-8100 FAX. (305) 262-6978

GARAGE\98-050AB

SECTIONAL RESIDENTIAL GARAGE DOOR

DAB DOORS INC.
12195 N.W. 98 TH. AVE.
HIALEAH GARDENS, FL. 33016
TEL.(305) 556 - 6624

revisions:			
no	date	by	description
A	07.08.98		GENERAL REVISION
B	08.24.98		DPT. INSULATION ADDED

date: 02-23-98
scale: 1/2"=1'-0"
dr. by: HAMID
chk. by:

drawing no.
98-05

sheet 1 of 3

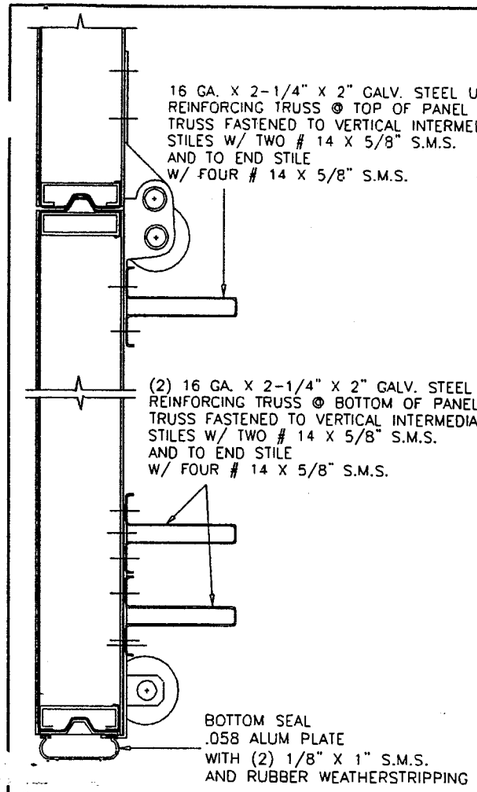

1ST SECTION (BOTTOM)

REINFORCING

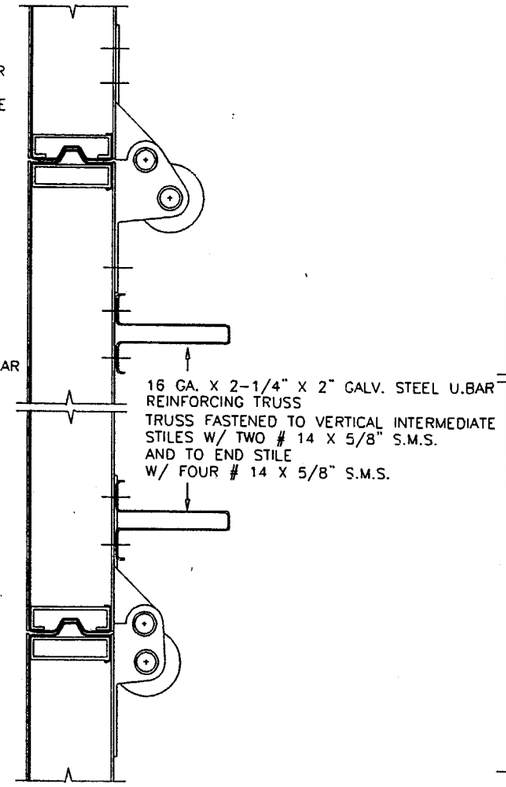

2ND SECTION

REINFORCING

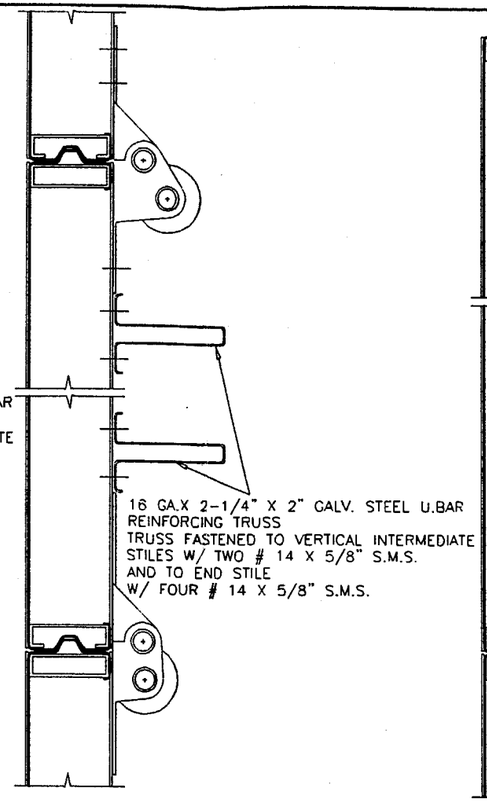

INTERMEDIATE SECTIONS

REINFORCING

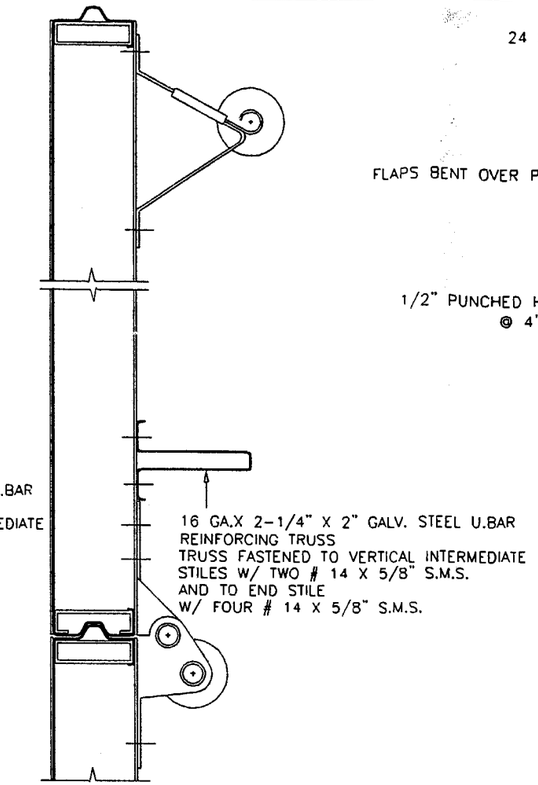

TOP SECTION

REINFORCING

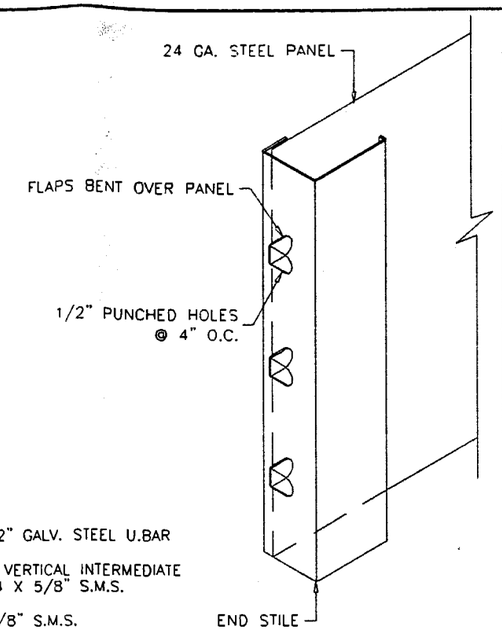

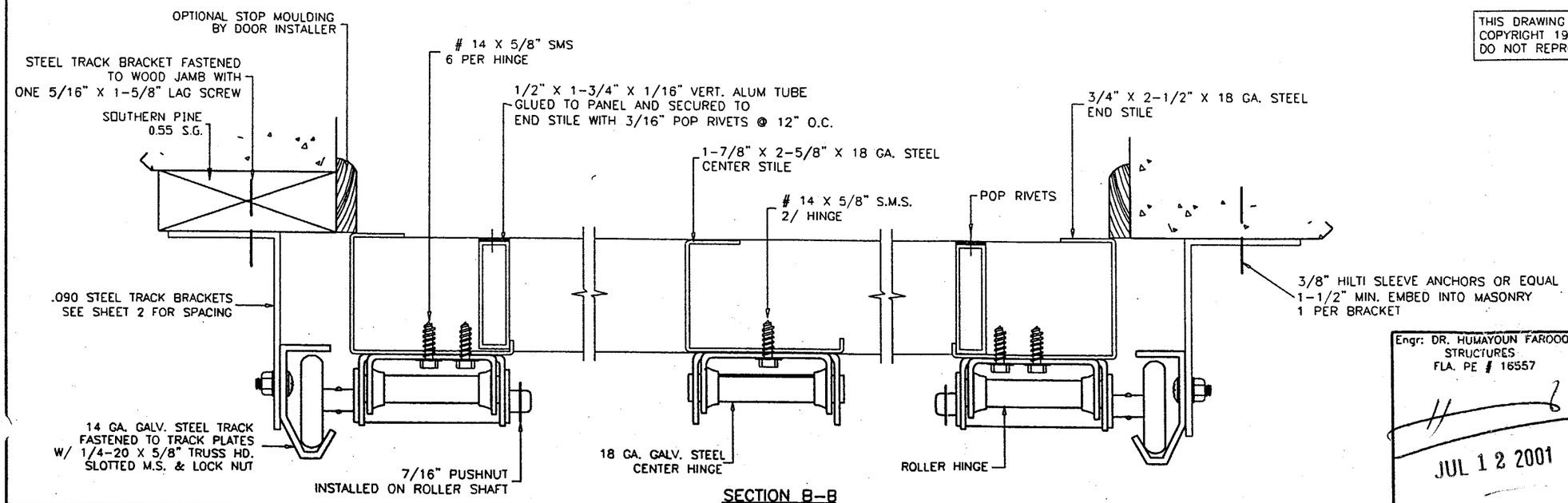

SECTION B-B

THIS DRAWING IS PROPERTY OF DAB DOORS INC.
COPYRIGHT 1998. TRADEMARK PROTECTED
DO NOT REPRODUCE WITHOUT WRITTEN CONSENT.

PATENT PENDING

Engr: DR. HUMAYOUN FAROOQ
STRUCTURES
FLA. PE # 16557

JUL 12 2001

APPROVED AS COMPLYING WITH THE
SOUTH FLORIDA BUILDING CODE
DATE AUG 09 2001
BY
PRODUCT CONTROL INSPECTOR
BUILDING CODE COMPLIANCE OFFICE
ACCEPTANCE NO. 01-0620.10

AL-FAROOQ CORPORATION
ENGINEERS, PLANNERS & PRODUCT DESIGN
1235 SW 87 AVE
MIAMI, FLORIDA 33174
TEL. (305) 264-8100 FAX. (305) 262-6978

GARAGE\98-05DAB

SECTIONAL RESIDENTIAL GARAGE DOOR

DAB DOORS INC.
12195 N.W. 98 TH. AVE.
HIALEAH GARDENS, FL. 33016
TEL.(305) 556 - 6624

revisions:

no	date	by	description

date: 02-23-98
scale:
dr. by: HAMID
chk. by:

drawing no. 98-05

sheet 2 of 3

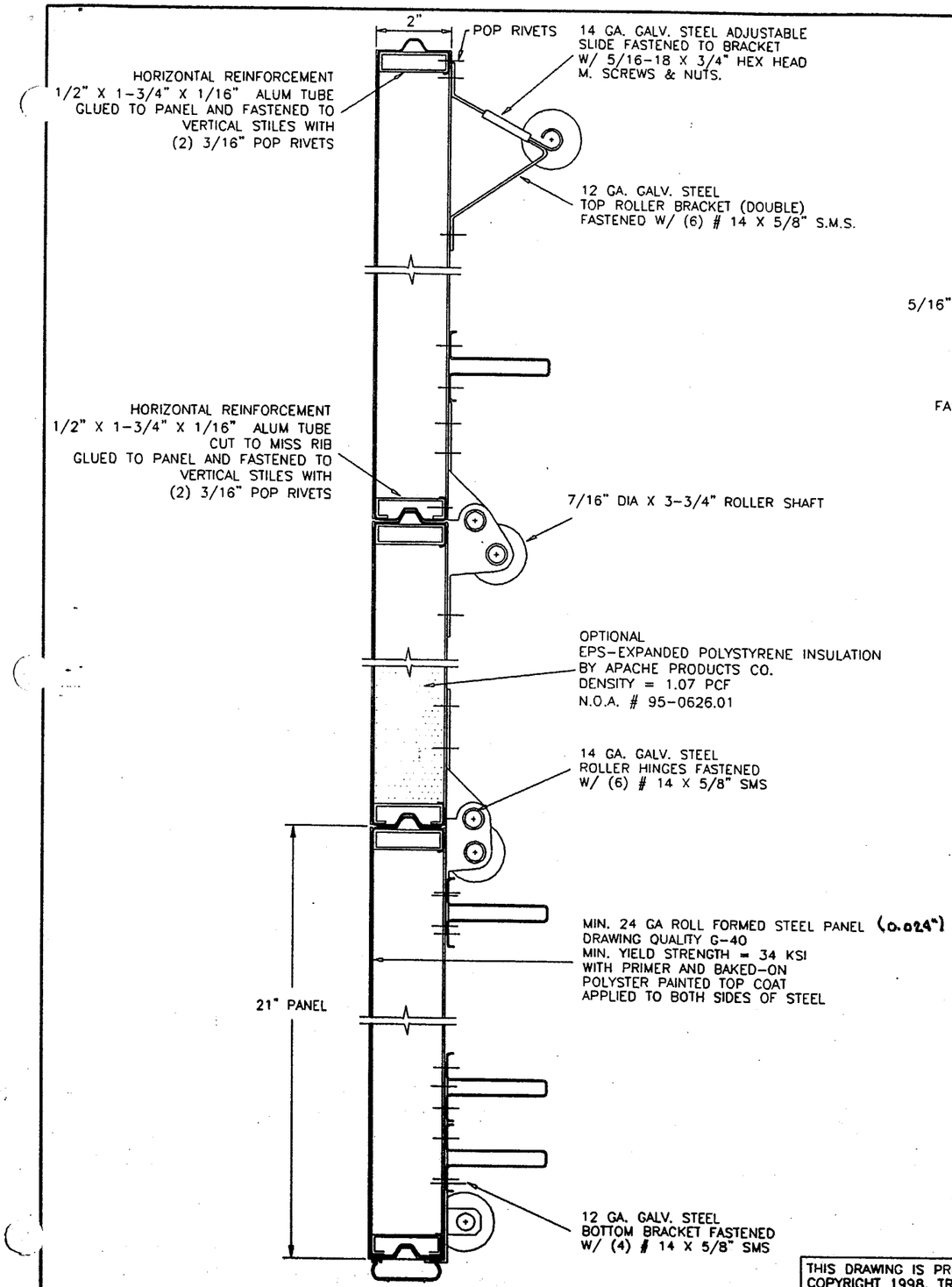

SECTION A-A

DOOR HEIGHT	* SECTION HEIGHTS					BRACKET PLACEMENTS							
	1ST	2ND	3RD	4TH	5TH	B1	B2	B3	B4	B5	B6	B7	B8
6'-0"	18"	18"	18"	18"	N/A	1"	11-3/4"	23"	34"	45"	56"	67"	–
6'-6"	21"	18"	18"	21"	N/A	1"	11-3/4"	23"	34"	45"	56"	67"	–
7'-0"	21"	21"	21"	21"	N/A	1"	11-3/4"	23"	34"	45"	56"	67"	78-1/4"
7'-6"	18"	18"	18"	18"	18"	1"	11-3/4"	23"	34"	45"	56"	67"	78-1/4"
8'-0"	21"	18"	18"	18"	21"	1"	11-3/4"	23"	34"	45"	56"	67"	78-1/4"

*-SECTIONS ARE NUMBERED STARTING AT THE BOTTOM
FOR DOORS MORE THAN 8 FT. HIGH, USE ADDITIONAL TOP BRACKETS AT 10" O.C.

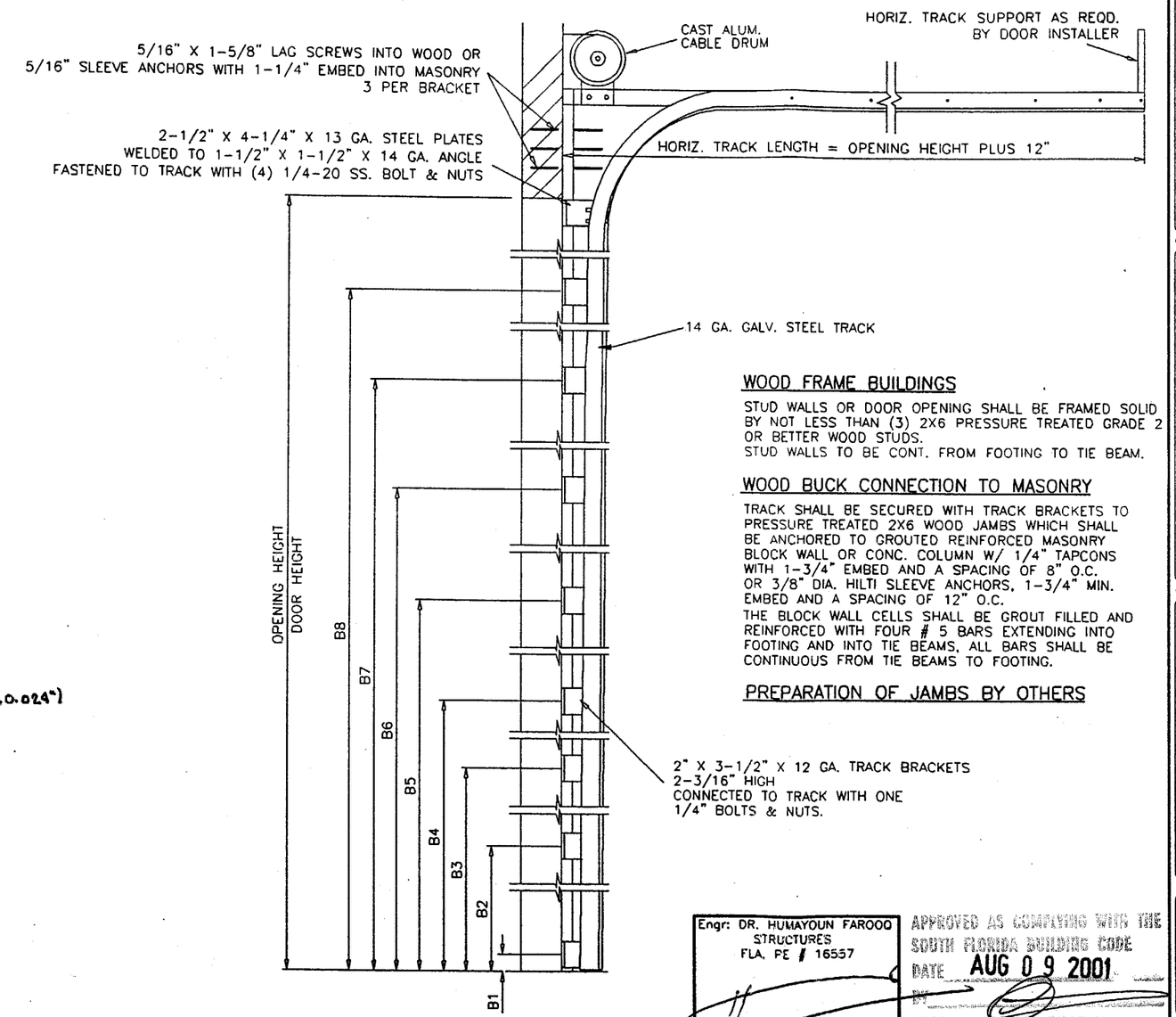

TRACK CONFIGURATION

WOOD FRAME BUILDINGS

STUD WALLS OR DOOR OPENING SHALL BE FRAMED SOLID BY NOT LESS THAN (3) 2X6 PRESSURE TREATED GRADE 2 OR BETTER WOOD STUDS.
STUD WALLS TO BE CONT. FROM FOOTING TO TIE BEAM.

WOOD BUCK CONNECTION TO MASONRY

TRACK SHALL BE SECURED WITH TRACK BRACKETS TO PRESSURE TREATED 2X6 WOOD JAMBS WHICH SHALL BE ANCHORED TO GROUTED REINFORCED MASONRY BLOCK WALL OR CONC. COLUMN W/ 1/4" TAPCONS WITH 1-3/4" EMBED AND A SPACING OF 8" O.C. OR 3/8" DIA. HILTI SLEEVE ANCHORS, 1-3/4" MIN. EMBED AND A SPACING OF 12" O.C.
THE BLOCK WALL CELLS SHALL BE GROUT FILLED AND REINFORCED WITH FOUR # 5 BARS EXTENDING INTO FOOTING AND INTO TIE BEAMS, ALL BARS SHALL BE CONTINUOUS FROM TIE BEAMS TO FOOTING.

PREPARATION OF JAMBS BY OTHERS

THIS DRAWING IS PROPERTY OF DAB DOORS INC.
COPYRIGHT 1998, TRADEMARK PROTECTED
DO NOT REPRODUCE WITHOUT WRITTEN CONSENT.

PATENT PENDING

Engr: DR. HUMAYOUN FAROOQ
STRUCTURES
FLA. PE # 16557

JUL 12 2001

APPROVED AS COMPLYING WITH THE SOUTH FLORIDA BUILDING CODE
DATE AUG 09 2001
BY
PRODUCT CONTROL BRANCH
BUILDING CODE COMPLIANCE OFFICE
ACCEPTANCE NO. 01-0620.10

AL-FAROOQ CORPORATION
ENGINEERS, PLANNERS & PRODUCT DESIGN
1235 SW 87 AVE
MIAMI, FLORIDA 33174
TEL. (305) 264-8100 FAX. (305) 262-6978

GARAGE\98-05DAB

SECTIONAL RESIDENTIAL GARAGE DOOR

DAB DOORS INC.
12195 N.W. 98 TH. AVE.
HIALEAH GARDENS, FL. 33016
TEL.(305) 556 - 6624

revisions:			
no	date	by	description

date: 02-23-98
scale:
dr. by: HAMID
chk. by:

drawing no. 98-05

sheet 3 of 3