MIAMI-DADE

BUILDING CODE COMPLIANCE OFFICE (BCCO)
PRODUCT CONTROL DIVISION

MIAMI-DADE COUNTY, FLORIDA
METRO-DADE FLAGLER BUILDING
140 WEST FLAGLER STREET, SUITE 1603
MIAMI, FLORIDA 33130-1563
(305) 375-2901 FAX (305) 375-2908

NOTICE OF ACCEPTANCE (NOA)

Stanley access Technologies
65 Scott Swamp road
Farmington, Ct. 06032

SCOPE:
This NOA is being issued under the applicable rules and regulations governing the use of construction materials. The documentation submitted has been reviewed by Miami-Dade County Product Control Division and accepted by the Board of Rules and Appeals (BORA) to be used in Miami Dade County and other areas where allowed by the Authority Having Jurisdiction (AHJ).

This NOA shall not be valid after the expiration date stated below. The Miami-Dade County Product Control Division (In Miami Dade County) and/or the AHJ (in areas other than Miami Dade County) reserve the right to have this product or material tested for quality assurance purposes. If this product or material fails to perform in the accepted manner, the manufacturer will incur the expense of such testing and the AHJ may immediately revoke, modify, or suspend the use of such product or material within their jurisdiction. BORA reserves the right to revoke this acceptance, if it is determined by Miami-Dade County Product Control Division that this product or material fails to meet the requirements of the applicable building code.

This product is approved as described herein, and has been designed to comply with the High Velocity Hurricane Zone of the Florida Building Code.

DESCRIPTION: Series "Dura-Storm 2000/3000 " Aluminum Automatic Sliding Doors (Reinforced)

APPROVAL DOCUMENT: Drawing No. **413925**., titled "DURA-STORM. ", sheets 1 through 8 of 8, dated 09-18-00 and last revised on 03-22-02, prepared by manufacturer, bearing the Miami-Dade County Product Control Approval stamp with the Notice of Acceptance number and approval date by the Miami-Dade County Product Control Division.

MISSILE IMPACT RATING: Large Missile Impact Resistant

LABELING: Each unit shall bear a permanent label with the manufacturer's name or logo, city, state and following statement: "Miami-Dade County Product Control Approved", unless otherwise noted herein.

RENEWAL of this NOA shall be considered after a renewal application has been filed and there has been no change in the applicable building code negatively affecting the performance of this product.

TERMINATION of this NOA will occur after the expiration date or if there has been a revision or change in the materials, use, and/or manufacture of the product or process. Misuse of this NOA as an endorsement of any product, for sales, advertising or any other purposes shall automatically terminate this NOA. Failure to comply with any section of this NOA shall be cause for termination and removal of NOA.

ADVERTISEMENT: The NOA number preceded by the words Miami-Dade County, Florida, and followed by the expiration date may be displayed in advertising literature. If any portion of the NOA is displayed, then it shall be done in its entirety.

INSPECTION: A copy of this entire NOA shall be provided to the user by the manufacturer or its distributors and shall be available for inspection at the job site at the request of the Building Official.

This NOA **01-0622.03** and consists of this page 1 as well as approval document mentioned above.

The submitted documentation was reviewed by **Ishaq I. Chanda, P. E.**

PRODUCT CONTROL ACCEPTED

DWG NO. 413925

ANCHOR TYPE

IN CONCRETE: Ø1/4" RAWL PERMASEAL TAPPER CONCRETE SCREW EMBEDDED 1 1/2" MIN.
IN STEEL: 1/4-20 SMS SAE GRADE 2 OR BETTER (NOTE 3/16" A-36 STEEL MIN.)
IN WOOD: #14 WOOD SCREW EMBEDDED 1 1/2" MIN.
(NOTE: MINIMUM 2X4 WOODBUCK FOR WOOD SCREWS)

ANCHOR SPACING

SILL: DOUBLE ROWS, 4" FROM EACH CORNER WITH REMAINDER SPACED AT 13" O.C.
HEAD: SINGLE ROW, 4" FROM EACH CORNER WITH REMAINDER SPACED AT 10" O.C.
JAMBS: SINGLE ROW, 2" FROM BOTTOM CORNER WITH REMAINDER SPACED AT 10" O.C.

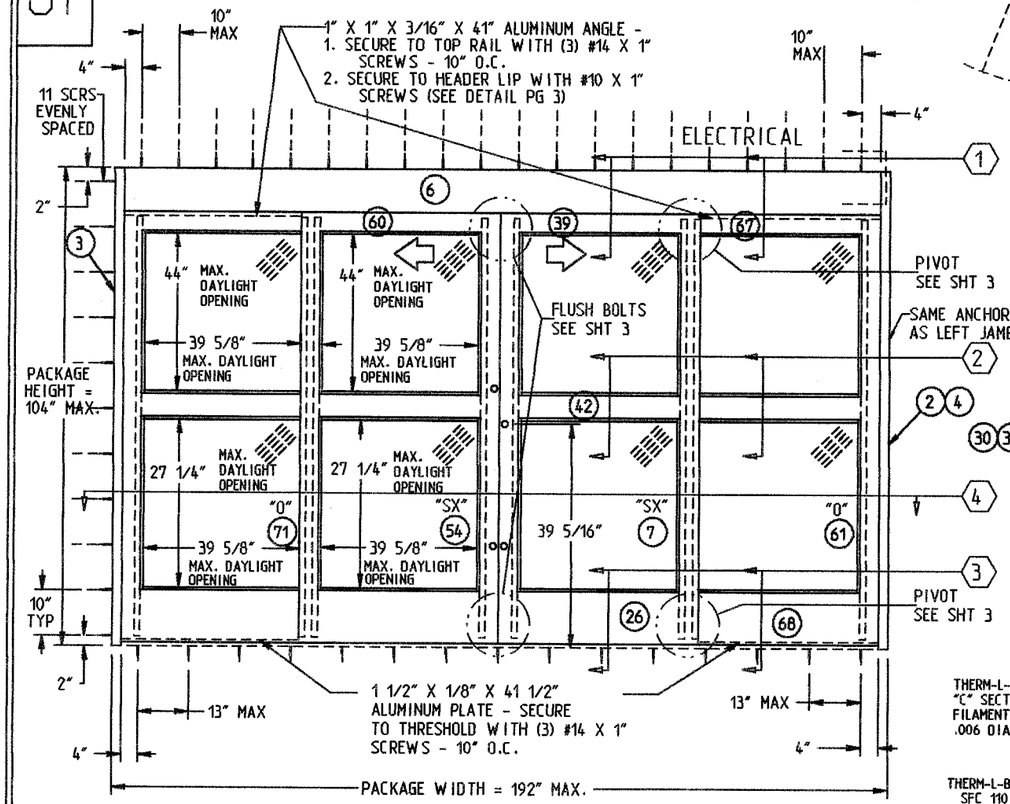

EXTERIOR ELEVATION

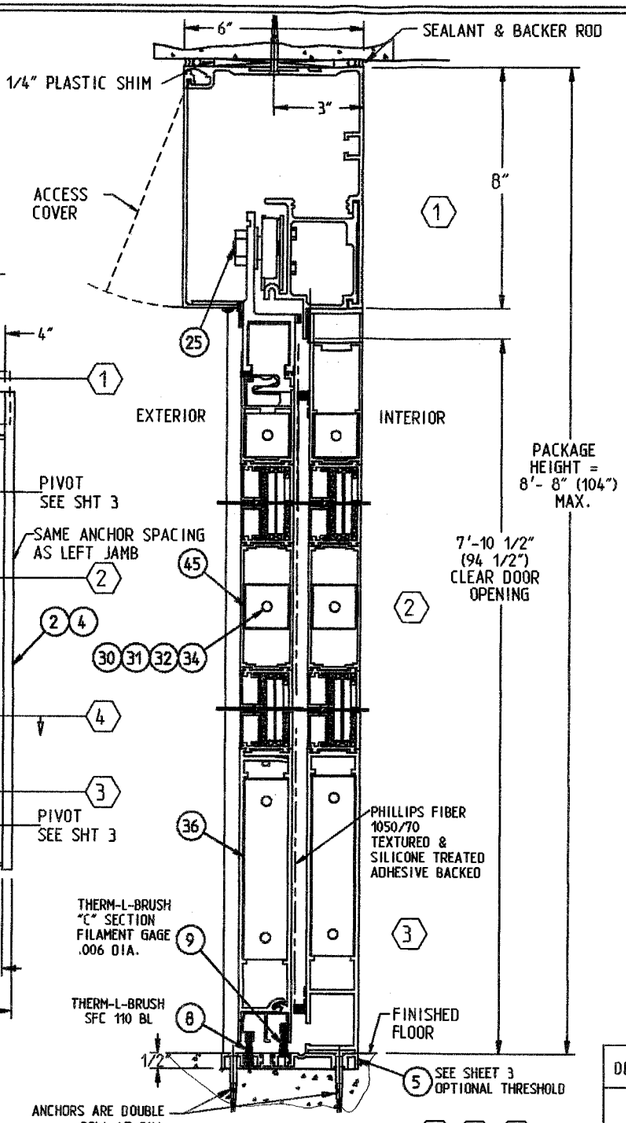

VERTICAL SECTION

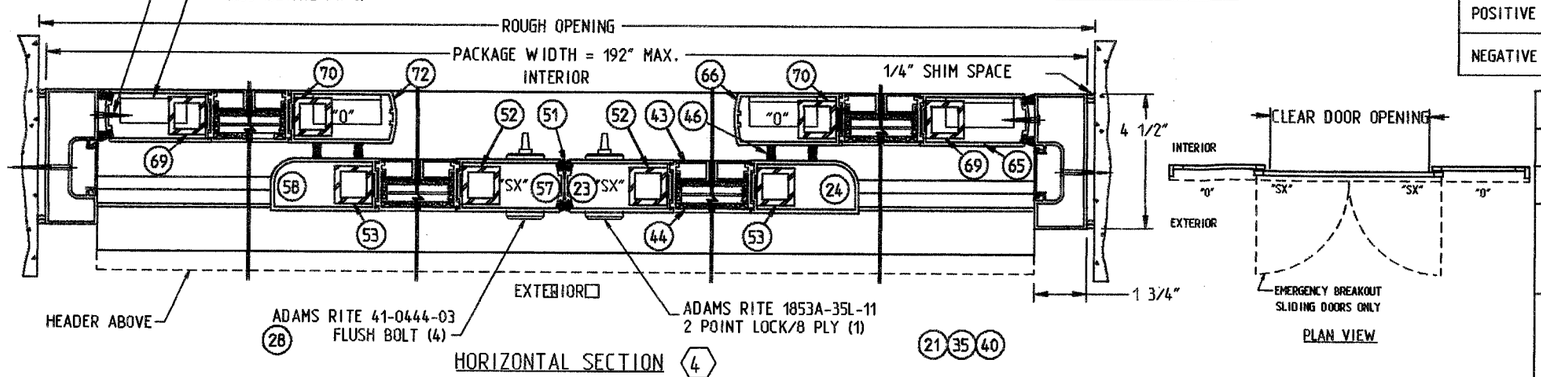

HORIZONTAL SECTION

PLAN VIEW

REVISIONS

REV	ECN NO.	DATE	DESCRIPTION	DRAWN	APPROVED
A	00-107	08/10/01	INITIAL RELEASE	RWH	GHN
B	01-98	11/08/01	SEE PCN FILE FOR REVISION DETAILS	PJL	GHN
C	01-111	12/13/01	COMBINE 2000 & 3000 SERIES	PJL	GHN
D	02-22	2/13/02	ADD "O" PANEL DETAIL PG 3 AND SECURITY HOOK DETAIL PG 7	VAS	GHN
E	02-35	3/22/02	SCREW QTY WAS 10; SCREW LENGTH WAS 1"	VAS	GHN

PACKAGE HEIGHT INFORMATION FOR SURFACE APPLICATIONS

PACKAGE HEIGHT	MASONRY OPENING	CAULKING ALLOWANCE	ACTUAL CLEAR OPG UNDER HEADER
8'-8" (104")	8'-8 1/4" (104 1/4")	1/4"	7'-10 1/2" (94 1/2")

PACKAGE WIDTH INFORMATION

PKG WIDTH	SLIDING DOOR OPENING	(SX) DOOR WIDTH	(SO) DOOR WIDTH	DOOR TRAVEL	MASONRY OPENING	CAULKING ALLOWANCE
16'-0" (192")	78 1/4"	49 7/16"	49 7/16"	39 1/8"	16'-1/2" (192 1/2")	1/4" / SIDE

NOTES:

1) ALL ALUMINUM PARTS ARE 6063-T6 ALUMINUM
2) GLAZING: 9/16 IMPACT RATED (2 PCS. 1/4" CLEAR, ANNEALED GLASS AT INNER & OUTER WITH .100" INTERLAYER LAMINATE) "SAFEGLAS" BY SECURITY IMPACT GLASS (PER CURRENT APPROVED NOA)
3) CORNER PANEL CONSTRUCTION: PANEL CORNERS ARE BUTT JOINTED, SECURED WITH (4) FULL WIDTH 5/16" THREADED TIE RODS AT TOP RAIL, INTERMEDIATE HORIZONTAL MUNTIN BAR AND BOTTOM RAIL. ALL JOINTS ARE ALSO WELDED.
4) THE GLAZING MATERIAL IN BOTH FIXED AND SLIDING PANELS OF ALL SLIDING DOORS SHALL COMPLY WITH THE REQUIREMENTS IN THE PERFORMANCE SPECIFICATIONS AND METHODS OF TEST FOR SAFETY GLAZING MATERIALS USED IN BUILDINGS.
5) REFERENCE TEST REPORT FTL #3076

DESIGN PRESSURE RATING - SERIES 2000

	WHERE WATER INFILTRATION REQUIREMENT IS NEEDED.	WHERE WATER INFILTRATION REQUIREMENT IS NOT NEEDED.
POSITIVE	NOT APPROVED	+ 50 PSF
NEGATIVE	NOT APPROVED	- 50 PSF

Approved as complying with the Florida Building Code
Date APRIL 18, 2002
NOA# 01-0622.03
Miami Dade Product Control Division
By Shaq I. Chanda

DRAWN:	R.HABERERN 9/18/00
CHECKED:	G.NORTON 08/10/01
APPROVED:	G.NORTON 08/10/01
MATERIAL:	N/A
FINISH:	N/A

STANLEY ACCESS TECHNOLOGIES
A DIVISION OF THE STANLEY WORKS
65 SCOTT SWAMP ROAD, FARMINGTON, CT. 06032

TITLE ANCHORING FOR DURA-STORM 2000, BIPART, IMPACT, REINFORCED PACKAGE

PRODUCT LINE DURA-STORM 2000

SIZE B | DWG NO. 413925 | REV E

SCALE NONE | SHEET 1 OF 8

DWG NO. 413925

DWG NO. 413925

ANCHOR TYPE

IN CONCRETE: Ø1/4" RAWL PERMASEAL TAPPER CONCRETE SCREW EMBEDDED 1 1/2" MIN.
IN STEEL: 1/4-20 SMS SAE GRADE 2 OR BETTER (NOTE 3/16" A-36 STEEL MIN.)
IN WOOD: #14 WOOD SCREW EMBEDDED 1 1/2" MIN.
(NOTE: MINIMUM 2X4 WOODBUCK FOR WOOD SCREWS)

ANCHOR SPACING

SILL: DOUBLE ROWS, 4" FROM EACH CORNER WITH REMAINDER SPACED AT 13" O.C.
HEAD: SINGLE ROW, 4" FROM EACH CORNER WITH REMAINDER SPACED AT 10" O.C.
JAMBS: SINGLE ROW, 2" FROM BOTTOM CORNER WITH REMAINDER SPACED AT 10" O.C.

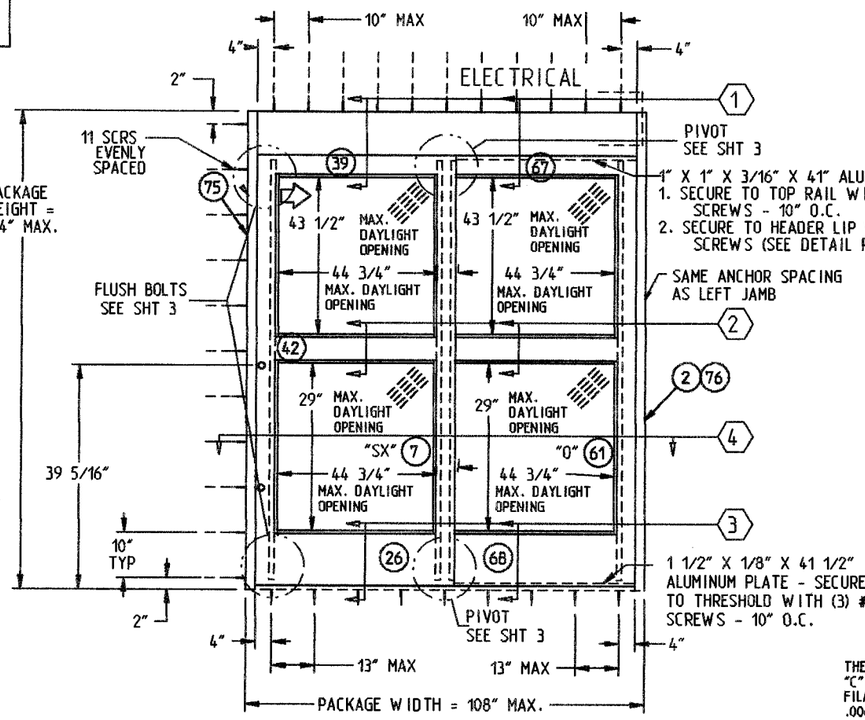

EXTERIOR ELEVATION

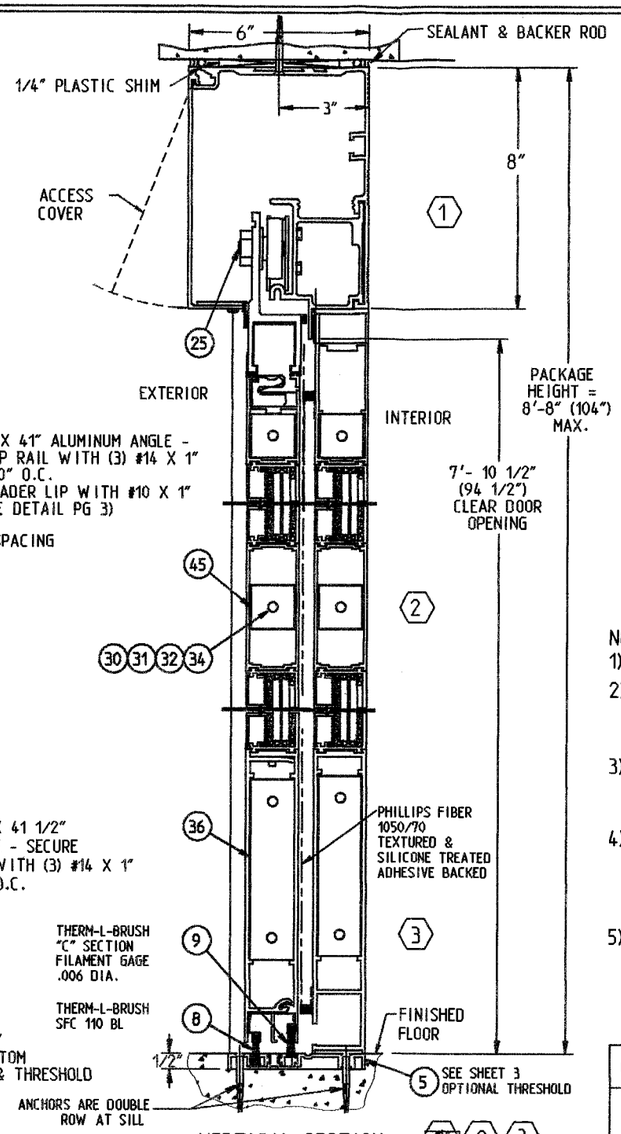

VERTICAL SECTION 1 2 3

PACKAGE HEIGHT INFORMATION FOR SURFACE APPLICATIONS

PACKAGE HEIGHT	MASONRY OPENING	CAULKING ALLOWANCE	ACTUAL CLEAR OPG UNDER HEADER
8'-8" (104")	8'-8 1/4" (104 1/4")	1/4"	7'-10 1/2" (94 1/2")

PACKAGE WIDTH INFORMATION

PKG WIDTH	SLIDING DOOR OPENING	(SX) DOOR WIDTH	(SO) DOOR WIDTH	DOOR TRAVEL	MASONRY OPENING	CAULKING ALLOWANCE
9'-0" (108")	44 1/4"	54 9/16"	54 9/16"	44 1/4"	9'-1/2" (108 1/2")	1/4" / SIDE

NOTES:
1) ALL ALUMINUM PARTS ARE 6063-T6 ALUMINUM
2) GLAZING: 9/16 IMPACT RATED (2 PCS. 1/4" CLEAR, ANNEALED GLASS AT INNER & OUTER WITH .100" INTERLAYER LAMINATE) "SAFEGLAS" BY SECURITY IMPACT GLASS (PER CURRENT APPROVED NOA)
3) CORNER PANEL CONSTRUCTION: PANEL CORNERS ARE BUTT JOINTED, SECURED WITH (4) FULL WIDTH 5/16" THREADED TIE RODS AT TOP RAIL, INTERMEDIATE HORIZONTAL MUNTIN BAR AND BOTTOM RAIL. ALL JOINTS ARE ALSO WELDED.
4) THE GLAZING MATERIAL IN BOTH FIXED AND SLIDING PANELS OF ALL SLIDING DOORS SHALL COMPLY WITH THE REQUIREMENTS IN THE PERFORMANCE SPECIFICATIONS AND METHODS OF TEST FOR SAFETY GLAZING MATERIALS USED IN BUILDINGS.
5) REFERENCE TEST REPORT FTL #3073

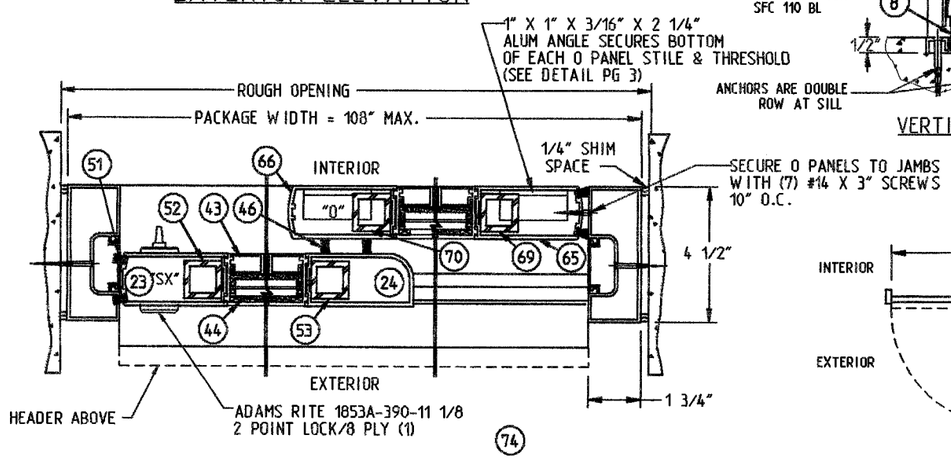

HORIZONTAL SECTION 4

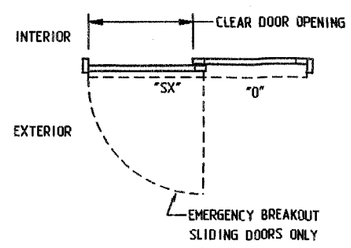

PLAN VIEW

DESIGN PRESSURE RATING - SERIES 2000		
	WHERE WATER INFILTRATION REQUIREMENT IS NEEDED.	WHERE WATER INFILTRATION REQUIREMENT IS NOT NEEDED.
POSITIVE	NOT APPROVED	+ 50 PSF
NEGATIVE	NOT APPROVED	- 50 PSF

Approved as complying with the Florida Building Code
Date APRIL 18, 2002
NOA# 01-0622.03
Miami Dade Product Control Division
By Ishaq I. Chanda

DRAWN:	R.HABERERN 9/19/00
CHECKED:	G.NORTON 08/10/01
APPROVED:	G.NORTON 08/10/01
MATERIAL:	N/A
FINISH:	N/A

STANLEY ACCESS TECHNOLOGIES
A DIVISION OF THE STANLEY WORKS
65 SCOTT SWAMP ROAD, FARMINGTON, CT. 06032

TITLE ANCHORING FOR DURA-STORM 2000, SINGLE SLIDE, IMPACT REINFORCED PKG

PRODUCT LINE DURA-STORM 2000

SIZE	DWG NO.	REV
B	413925	E

SCALE NONE | SHEET 2 OF 8

DWG NO. 413925

DWG NO. 413925

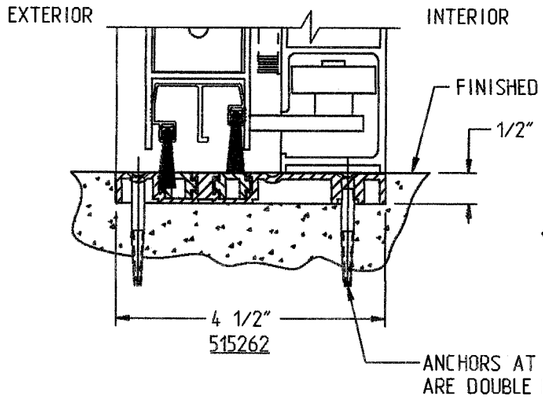

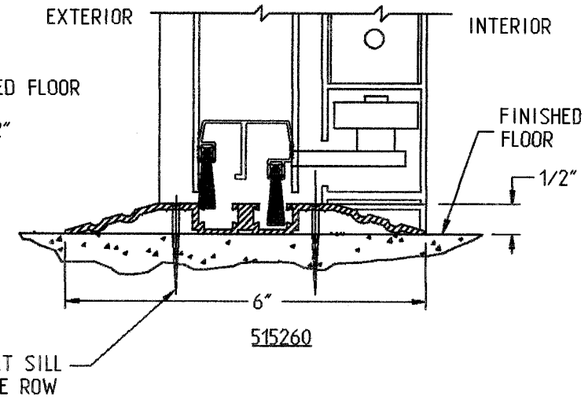

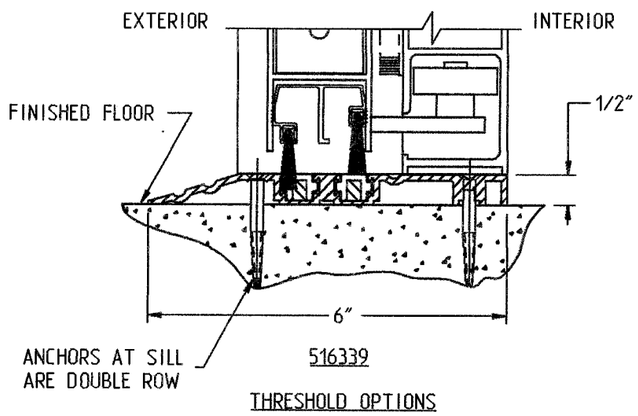

THRESHOLD OPTIONS

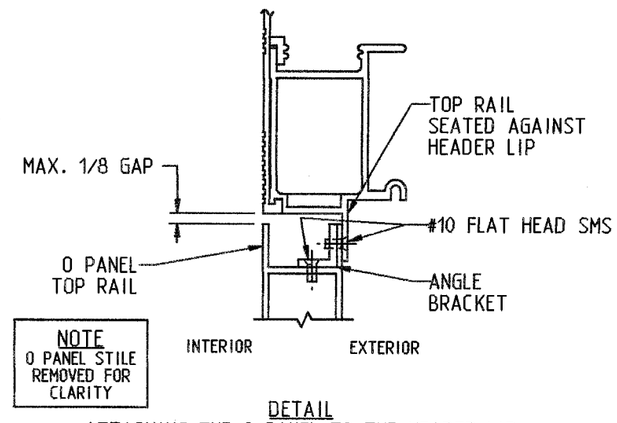

DETAIL
ATTACHING THE O PANEL TO THE HEADER LIP

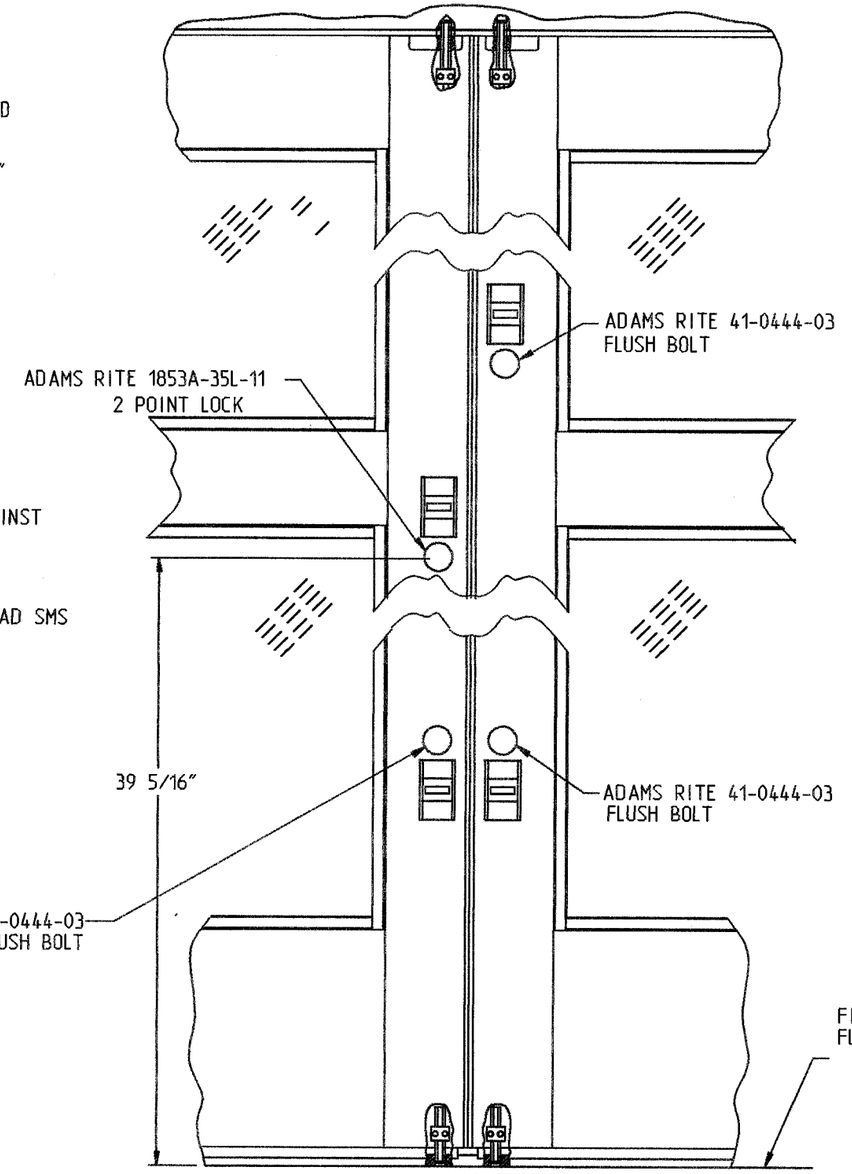

FLUSH BOLT DETAIL (VIEW FROM INTERIOR)

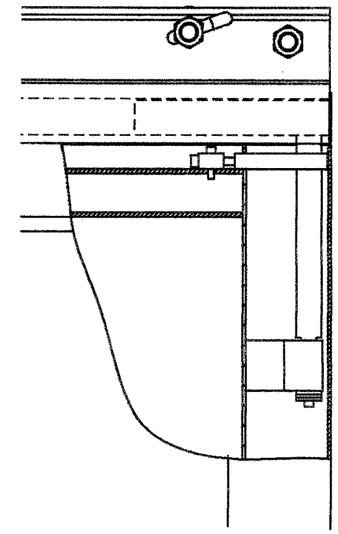

SX TOP PIVOT

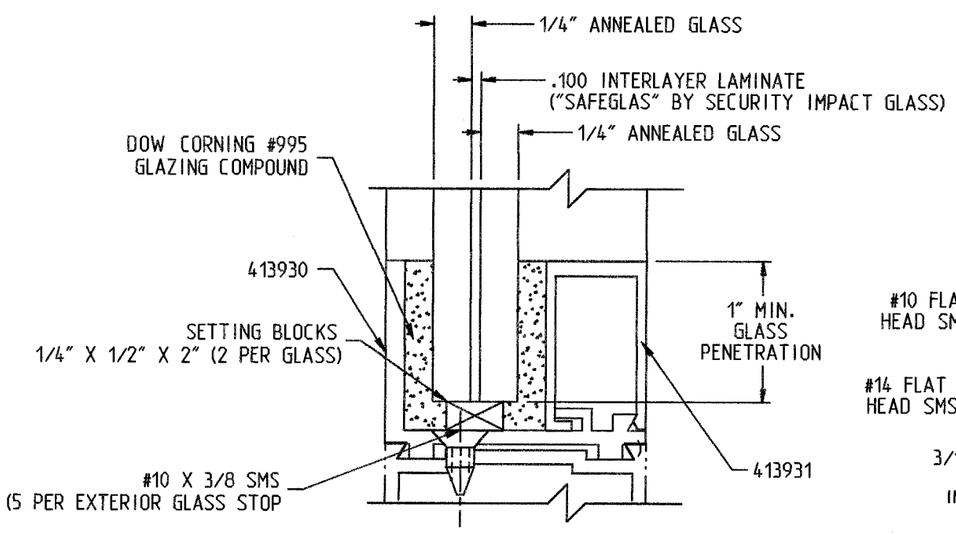

GLAZING DETAIL

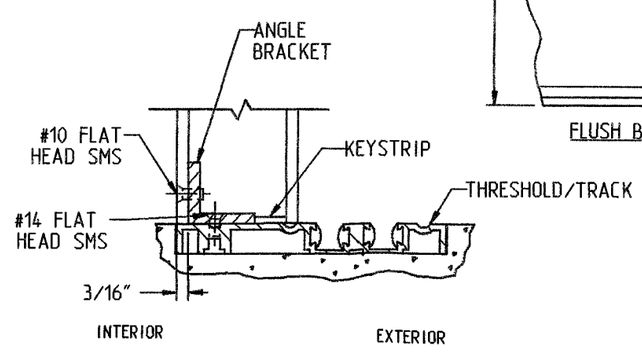

DETAIL
O PANEL INSTALLED OVER KEYSTRIP AND ANGLE BRACKETS

Approved as complying with the Florida Building Code
Date APRIL 18, 2002
NOA# 01-0622.03
Miami Dade Product Control Division
By Ishaq I. Chanda

DRAWN: R.HABERERN 9/20/00	STANLEY ACCESS TECHNOLOGIES A DIVISION OF THE STANLEY WORKS 65 SCOTT SWAMP ROAD, FARMINGTON, CT, 06032
CHECKED: G.NORTON 08/10/01	
APPROVED: G.NORTON 08/10/01	TITLE THRESHOLD, GLAZING, FLUSH BOLT DETAILS DURA-STORM 2000 IMPACT, REINFORCED PACKAGE
MATERIAL: N/A	PRODUCT LINE DURA-STORM, 2000
FINISH: N/A	SIZE B · DWG NO. 413925 · REV E
	SCALE NONE · SHEET 3 OF 8

DWG NO. 413925

DWG NO. 413925

ITEM	QTY	PART NO.	DESCRIPTION
1	1		DURA-STORM 2000 BI-PART, IMPACT, REINFORCED
2	2	413089-1	JAMB INSERT
3	1	157541	JAMB ASSEMBLY, 4.500 X 1.750 X .100
4	1	157542	JAMB ASSEMBLY, 4.500 X 1.750 X .100
5	2	516339	THRESHOLD
	1	515262	THRESHOLD
6A	1	515686	HEADER COVER, 8.468 X 1.968 X .109
6B	1	110755	HEADER, 8.00 X 6.00 X .140
6C	1	515056	HEADER TRACK TUBE, 4.624 X 3.110 X .125
6D	1	413859	FOAM BLOCK - RH
6E	1	413869	FOAM BLOCK - LH
7	1	157514-1	DOOR PANEL, SX - RH
8	1	713241	THERM-L-BRUSH
9	1	710739	THERM-L-BRUSH
10	1	516711	FLUSH BOLT GUIDE
12	1	413830	DAMPER ASSEMBLY
13	1	380901499	NUT, HEX JAM, 5/16-18
14	1	353367000	SCREW, SHC-SK, 5/16-18 X 2.0 LG
15	1	412638	LABEL, CAUTION
16	1	713754	SPIDER, LOCK ROD
17	1	412571	BLOCK-ANCHOR
18	1	413826	SPACER-PILLOW BLOCK
19	2	353349000	SCREW, SHM-SK, 1/4-20 X 1.0 LG
20	2	312073499	SCREW, FHM-PH, 1/4-20 X 2.0 LG
21	2	709221	LOCK, THUMBTURN
22	2	351801499	SCREW, SHC-SK, 1/4-20 X 3/8 LG
23	1	157550	STILE, LOCK-SX, RH, 3.531 X 1.750 X .125
24	1	157647	STILE, PIVOT-SX, RH, 3.531 X 1.750 X .125
25	1	111879-2	HANGER ASSEMBLY-SX, RH
26	1	111434	RAIL, BOTTOM, 9.625 X 1.735 X .140
27	4	312008960	SCREW, FHM-PH, #8-32 X 5/8LG
28	4	413821	FLUSH BOLT, ADAMS RITE 41-0444-03
29	2	413811	ROD ASSEMBLY, THROWBOLT
30	6	711475	WASHER, TIE ROD
31	4	711474	NUT, TIE ROD
32	4	711483	ROD, TIE, 5/16-18 UNC-1A, STEEL, FULL LENGTH OF RAIL
33	2	413162	EXIT INDICATOR
34	8	706233	NUT, FLANGED
35	1	413810	LOCK, 2 POINT ADAMS RITE 1853A-35L-11, A1-0464-03
36	2	516338	CLIP, GUIDE
37	1	516704	BOTTOM STRUT
38	1	516699	DETENT-DOOR PORTION
39	1	157563-1	RAIL, TOP-SX, RH, 2.875 X 1.735 X .093
40	2	706668	LOCK, CYLINDER
41	1	413805-6	SWEEP HOLDER
42	1	111916-2	BAR, MUNTIN, 4.250 X 1.735 X .093
43	8	413931	STOP, GLASS, IMPACT, 1.125 X .669
44	8	413930	GUTTER, IMPACT, 1.219 X 1.735
45	4	412479	CLIP, GUIDE
46	1	411624	PILE, ADHESIVE BACKED
47	2	413857	FOAM BLOCK
48	1	413858	FOAM BLOCK
49	1	413856	FOAM BLOCK
50	3	710240	PLUG, SNAP IN
51	16	712044-1	PILE
52	2	516741	STEEL TUBE, ASTM A500, 1 1/4 X 1 1/4 X 3/16 X 90 7/8 LG
53	2	516743	STEEL TUBE, ASTM A500, 1 1/4 X 1 1/4 X 3/16 X 90 7/8 LG
54	1	157513-1	DOOR PANEL, SX - LH
			SAME AS 157514-1 EXCEPT AS NOTED
55	2	312251960	SCREW, FHM-PH, #10-32 X 1/2 LG
56	1	516692	STRIKE PLATE ASSEMBLY
57	1	157549	STILE, STRIKE-SX, LH, 3.531 X 1.750 X .125
58	1	157648	STILE, PIVOT-SX, LH, 3.531 X 1.750 X .125
59	1	111879-1	HANGER ASSEMBLY-SX, LH
60	1	157563-2	RAIL, TOP-SX, LH, 2.875 X 1.735 X .093
61	1	157515	DOOR PANEL, O - RH
			SAME AS 157514-1 EXCEPT AS NOTED
63	1	712175	LOGO, STANLEY
64	1	411842	BREAK OUT SWITCH
65	1	157556	STILE, TRAILING, O, 3.531 X 1.750 X .125
66	1	157558	STILE, LEAD, O-RH, 3.531 X 1.750 X .125
67	1	157602	RAIL, TOP, SO-RH
68	1	111435	RAIL, BOTTOM, 10.000 X 1.735 X .140
69	2	516744	STEEL TUBE, ASTM A500, 1 1/4 X 1 1/4 X 3/16 X 93 3/8 LG
70	2	516745	STEEL TUBE, ASTM A500, 1 1/4 X 1 1/4 X 3/16 X 93 3/8 LG
71	1	157516	DOOR PANEL, O - LH
			SAME AS 157515 EXCEPT AS NOTED
72	1	157557	STILE, LEAD, O-LH, 3.531 X 1.750 X .125
73	1		DURA-STORM 2000 SINGLE SLIDE IMPACT, REINFORCED
			SAME AS BI-PART EXCEPT AS NOTED
74	1	515258	LOCK, 2 POINT ADAMS RITE MS1853A-390-11 1/8
75	1	110797-1	JAMB ASSEMBLY, LEFT HAND
76	1	110798-1	JAMB ASSEMBLY, RIGHT HAND

NOTE: ALL EXTRUSIONS ARE MADE FROM 6063-T6 ALUMINUM

Approved as complying with the Florida Building Code
Date APRIL 18, 2002
NOAC 01-0622.03
Miami Dade Product Control Division
By [illegible]

DRAWN: R.HABERERN 9/15/00
CHECKED: G.NORTON 08/10/01
APPROVED: G.NORTON 08/10/01
MATERIAL: N/A
FINISH: N/A

STANLEY ACCESS TECHNOLOGIES
A DIVISION OF THE STANLEY WORKS
65 SCOTT SWAMP ROAD, FARMINGTON, CT, 06032

TITLE BILL OF MATERIALS, DURA-STORM 2000, IMPACT, REINFORCED PACKAGE
PRODUCT LINE DURA-STORM, 2000

SIZE B
DWG NO. 413925
REV E
SCALE 1:1
SHEET 4 OF 8

DWG NO. 413925

DWG NO. 413925

ANCHOR TYPE

IN CONCRETE: Ø1/4" RAWL PERMASEAL TAPPER CONCRETE SCREW EMBEDDED 1 1/2" MIN.
IN STEEL: 1/4-20 SMS SAE GRADE 2 OR BETTER (NOTE 3/16" A-36 STEEL MIN.)
IN WOOD: #14 WOOD SCREW EMBEDDED 1 1/2" MIN.
(NOTE: MINIMUM 2X4 WOODBUCK FOR WOOD SCREWS)

ANCHOR SPACING

SILL: DOUBLE ROWS, 4" FROM EACH CORNER WITH REMAINDER SPACED AT 13" O.C.
HEAD: SINGLE ROW, 4" FROM EACH CORNER WITH REMAINDER SPACED AT 10" O.C.
JAMBS: SINGLE ROW, 2" FROM BOTTOM CORNER WITH REMAINDER SPACED AT 10" O.C.

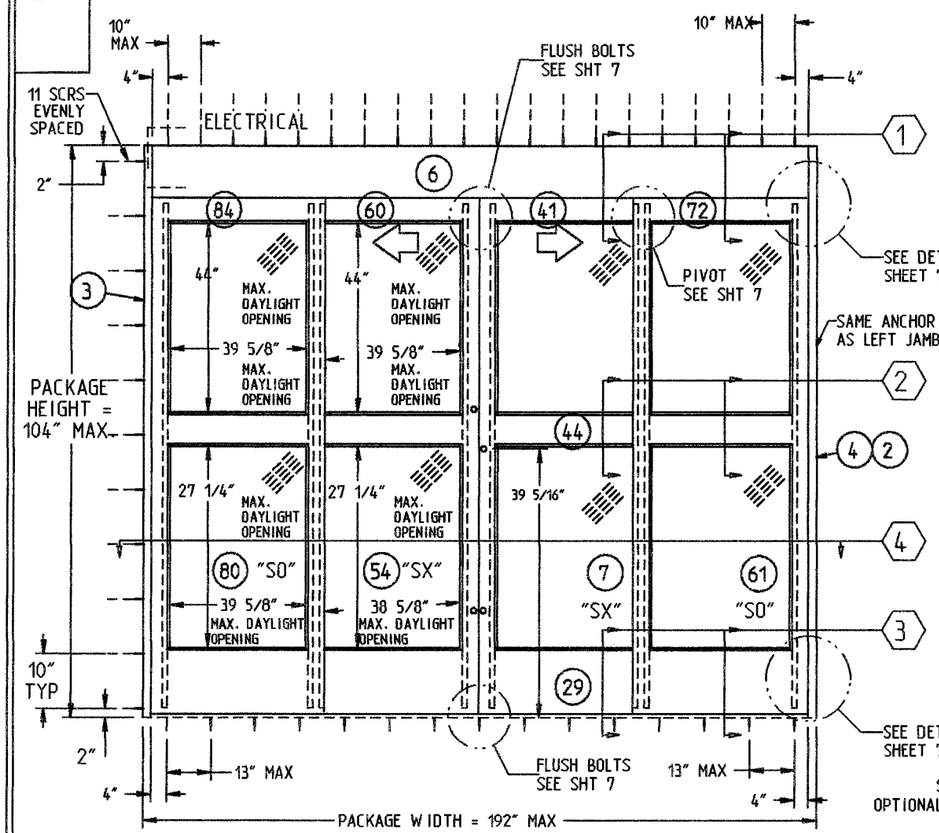

EXTERIOR ELEVATION

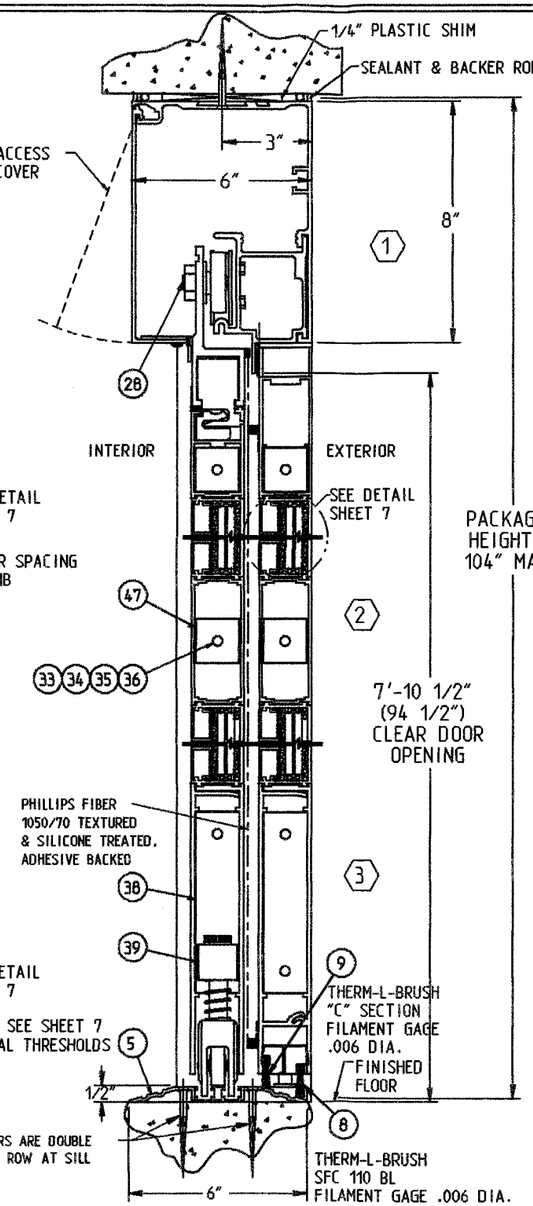

VERTICAL SECTION

PACKAGE HEIGHT INFORMATION FOR SURFACE APPLICATIONS

PACKAGE HEIGHT	MASONRY OPENING	CAULKING ALLOWANCE	ACTUAL CLEAR OPG UNDER HEADER
8'-8" (104")	8'-8 1/4" (104 1/4")	1/4"	7'-10 1/2" (94 1/2")

PACKAGE WIDTH INFORMATION

PKG WIDTH	SLIDING DOOR OPENING	(SX) DOOR WIDTH	(SO) DOOR WIDTH	DOOR TRAVEL	MASONRY OPENING	CAULKING ALLOWANCE
16'-0" (192")	78 1/4"	49 7/16"	49 7/16"	39 1/8"	16'-1/2" (192 1/2")	1/4" / SIDE

NOTES:
1) ALL ALUMINUM PARTS ARE 6063-T6 ALUMINUM
2) GLAZING: 9/16 IMPACT RATED (2 PCS. 1/4" CLEAR, ANNEALED GLASS AT INNER & OUTER WITH .100" INTERLAYER LAMINATE) "SAFEGLAS" BY SECURITY IMPACT GLASS (PER CURRENT APPROVED NOA)
3) CORNER PANEL CONSTRUCTION: PANEL CORNERS ARE BUTT JOINTED, SECURED WITH (4) FULL WIDTH 5/16" THREADED TIE RODS AT TOP RAIL, INTERMEDIATE HORIZONTAL MUNTIN BAR AND BOTTOM RAIL. ALL JOINTS ARE ALSO WELDED.
4) THE GLAZING MATERIAL IN BOTH FIXED AND SLIDING PANELS OF ALL SLIDING DOORS SHALL COMPLY WITH THE REQUIREMENTS IN THE PERFORMANCE SPECIFICATIONS AND METHODS OF TEST FOR SAFETY GLAZING MATERIALS USED IN BUILDINGS.
5) REFERENCE TEST REPORT FTL #3076

DESIGN PRESSURE RATING - SERIES 3000		
	WHERE WATER INFILTRATION REQUIREMENT IS NEEDED.	WHERE WATER INFILTRATION REQUIREMENT IS NOT NEEDED.
POSITIVE	NOT APPROVED	+ 50 PSF
NEGATIVE	NOT APPROVED	- 50 PSF

Approved as complying with the Florida Building Code
Date APRIL 18, 2002
NOA# 01-0622.03
Miami Dade Product Control Division
By Ishaq I. Chanda

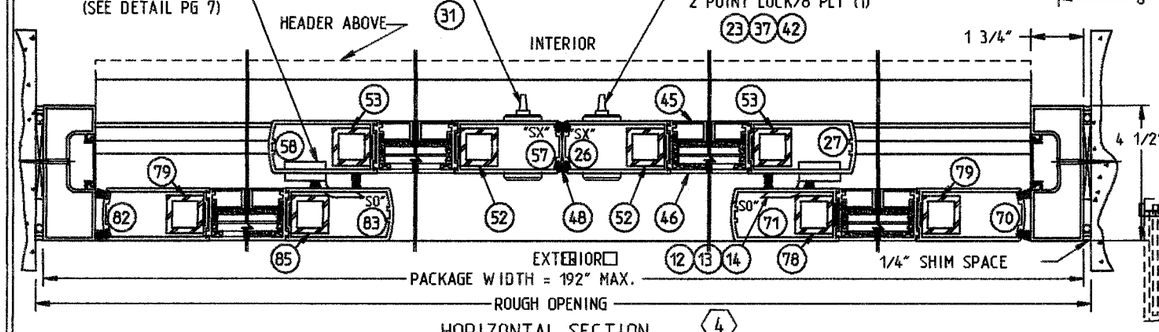

HORIZONTAL SECTION

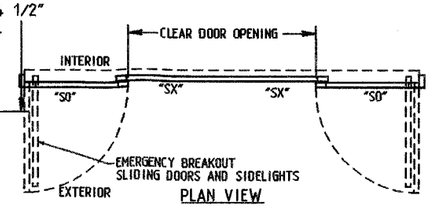

PLAN VIEW

DRAWN:	R.HABERERN 9/11/00
CHECKED:	G.NORTON 08/10/01
APPROVED:	G.NORTON 08/10/01
MATERIAL:	N/A
FINISH:	N/A

STANLEY ACCESS TECHNOLOGIES
A DIVISION OF THE STANLEY WORKS
65 SCOTT SWAMP ROAD, FARMINGTON, CT, 06032

TITLE ANCHORING FOR DURA-STORM 3000, BIPART, IMPACT, REINFORCED PACKAGE

PRODUCT LINE DURA-STORM 3000

SIZE	DWG NO.	REV
B	413925	E

SCALE NONE | SHEET 5 OF 8

DWG NO. 413925

DWG NO. 413925

ANCHOR TYPE

IN CONCRETE: Ø1/4" RAWL PERMASEAL TAPPER CONCRETE SCREW EMBEDDED 1 1/2" MIN.
IN STEEL: 1/4-20 SMS SAE GRADE 2 OR BETTER (NOTE 3/16" A-36 STEEL MIN.)
IN WOOD: #14 WOOD SCREW EMBEDDED 1 1/2" MIN.
(NOTE: MINIMUM 2X4 WOODBUCK FOR WOOD SCREWS)

ANCHOR SPACING

SILL: DOUBLE ROWS, 4" FROM EACH CORNER WITH REMAINDER SPACED AT 13" O.C.
HEAD: SINGLE ROW, 4" FROM EACH CORNER WITH REMAINDER SPACED AT 10" O.C.
JAMBS: SINGLE ROW, 2" FROM BOTTOM CORNER WITH REMAINDER SPACED AT 10" O.C.

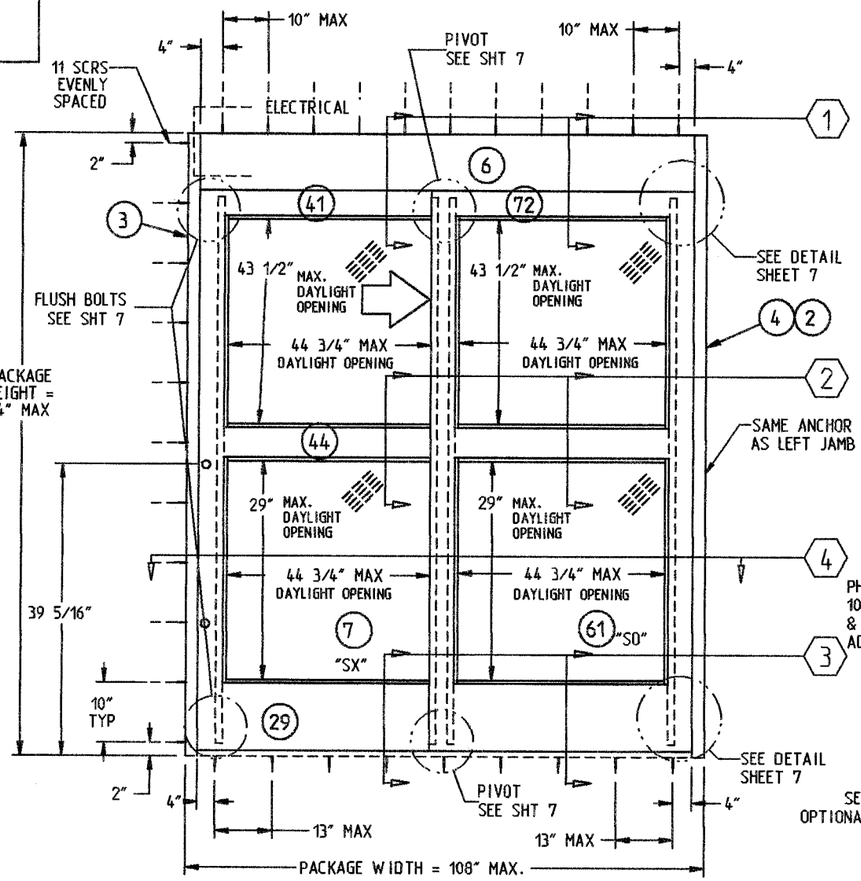

EXTERIOR ELEVATION

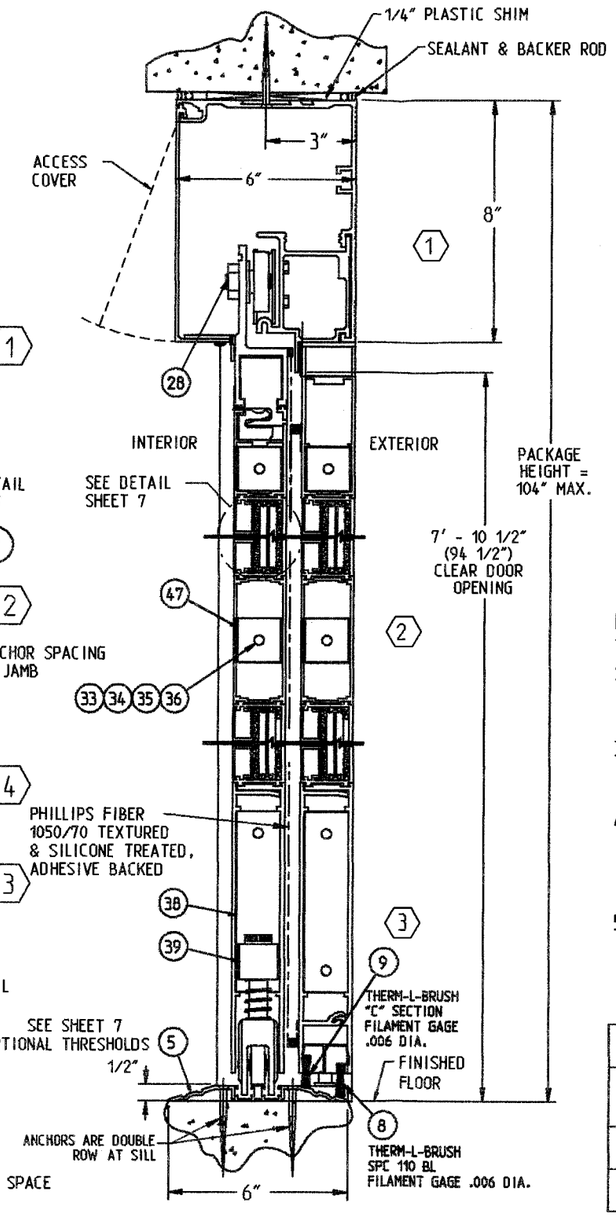

VERTICAL SECTION

PACKAGE HEIGHT INFORMATION FOR SURFACE APPLICATIONS

PACKAGE HEIGHT	MASONRY OPENING	CAULKING ALLOWANCE	ACTUAL CLEAR OPG UNDER HEADER
8'-8" (104")	8'-8 1/4" (104 1/4")	1/4"	7'-10 1/2" (94 1/2")

PACKAGE WIDTH INFORMATION

PKG WIDTH	SLIDING DOOR OPENING	(SX) DOOR WIDTH	(SO) DOOR WIDTH	DOOR TRAVEL	MASONRY OPENING	CAULKING ALLOWANCE
9'-0" (108")	44 1/4"	54 9/16"	54 9/16"	44 1/4"	9'-1/2" 108 1/2"	1/4" / SIDE

NOTES:

1) ALL ALUMINUM PARTS ARE 6063-T6 ALUMINUM
2) GLAZING: 9/16 IMPACT RATED (2 PCS 1/4" CLEAR, ANNEALED GLASS AT INNER & OUTER WITH .100" INTERLAYER LAMINATE) "SAFEGLAS" BY SECURITY IMPACT GLASS (PER CURRENT APPROVED NOA)
3) CORNER PANEL CONSTRUCTION: PANEL CORNERS ARE BUTT JOINTED, SECURED WITH (4) FULL WIDTH 5/16" THREADED TIE RODS AT TOP RAIL, INTERMEDIATE HORIZONTAL MUNTIN BAR AND BOTTOM RAIL. ALL JOINTS ARE ALSO WELDED.
4) THE GLAZING MATERIAL IN BOTH FIXED AND SLIDING PANELS OF ALL SLIDING DOORS SHALL COMPLY WITH THE REQUIREMENTS IN THE PERFORMANCE SPECIFICATIONS AND METHODS OF TEST FOR SAFETY GLAZING MATERIALS USED IN BUILDINGS.
5) REFERENCE TEST REPORT FTL #3073

DESIGN PRESSURE RATING - SERIES 3000		
	WHERE WATER INFILTRATION REQUIREMENT IS NEEDED.	WHERE WATER INFILTRATION REQUIREMENT IS NOT NEEDED.
POSITIVE	NOT APPROVED	+ 50 PSF
NEGATIVE	NOT APPROVED	- 50 PSF

Approved as complying with the Florida Building Code
Date APRIL 18, 2002
NOA# 01-0622.03
Miami Dade Product Control Division
By Ishaq I. Chanda

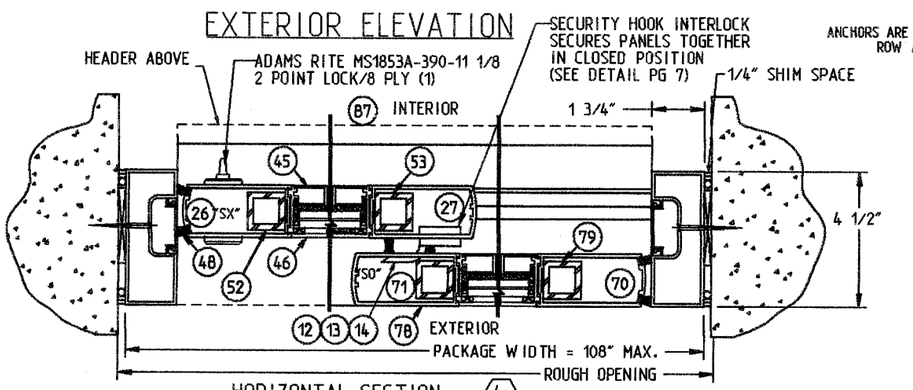

HORIZONTAL SECTION

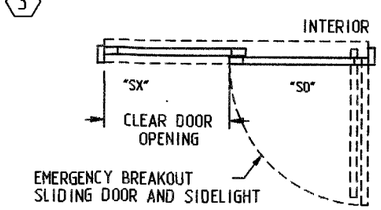

PLAN VIEW

DRAWN:	R.HABERERN 9/11/00
CHECKED:	G.NORTON 08/10/01
APPROVED:	G.NORTON 08/10/01
MATERIAL:	N/A
FINISH:	N/A

STANLEY ACCESS TECHNOLOGIES
A DIVISION OF THE STANLEY WORKS
65 SCOTT SWAMP ROAD, FARMINGTON, CT, 06032

TITLE: ANCHORING FOR DURA-STORM 3000, SINGLE SLIDE, IMPACT, REINFORCED PKG

PRODUCT LINE: DURA-STORM

SIZE	DWG NO.	REV
B	413925	E

SCALE: NONE | SHEET 6 OF 8

DWG NO. 413925

DWG NO. 413925

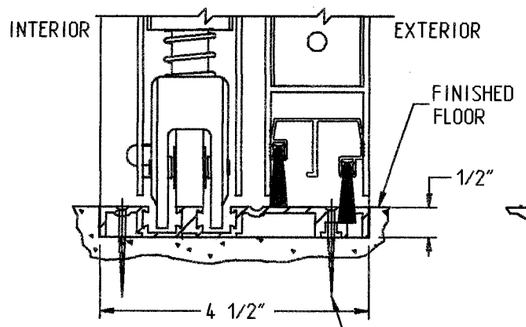

515262

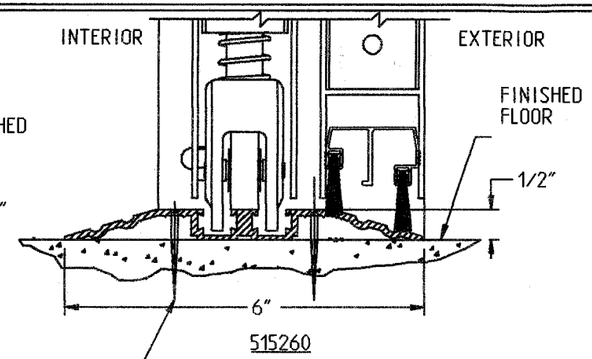

515260

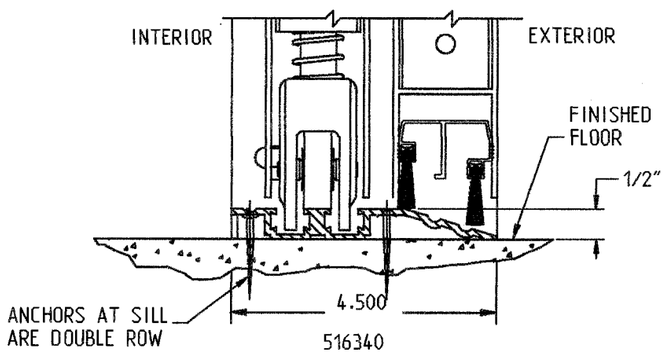

516340

5 THRESHOLD OPTIONS

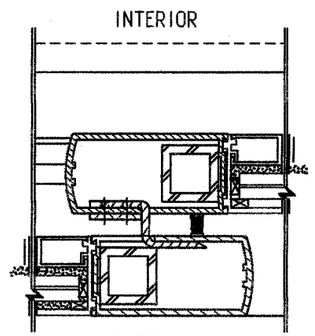

DETAIL
SECURITY HOOK INTERLOCK
(REF. PG 5)

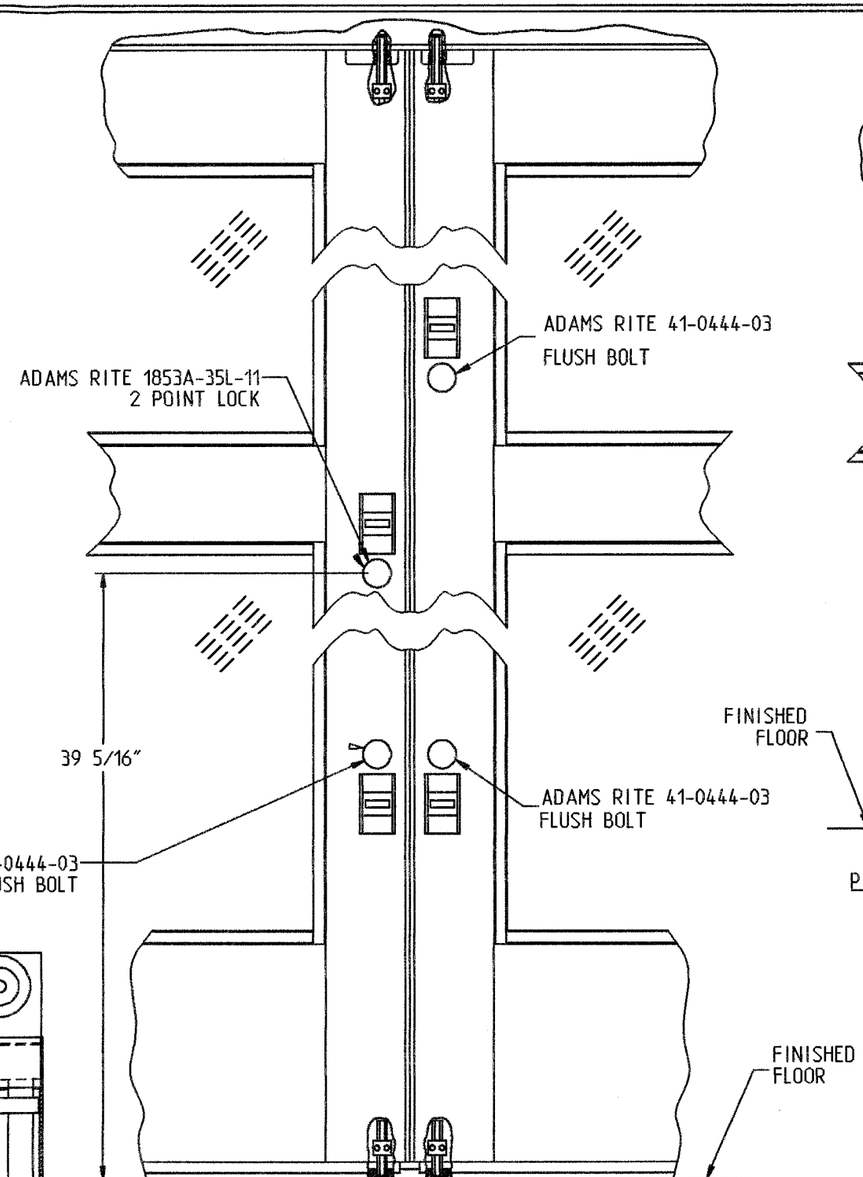

FLUSH BOLT DETAIL (VIEW FROM INTERIOR)

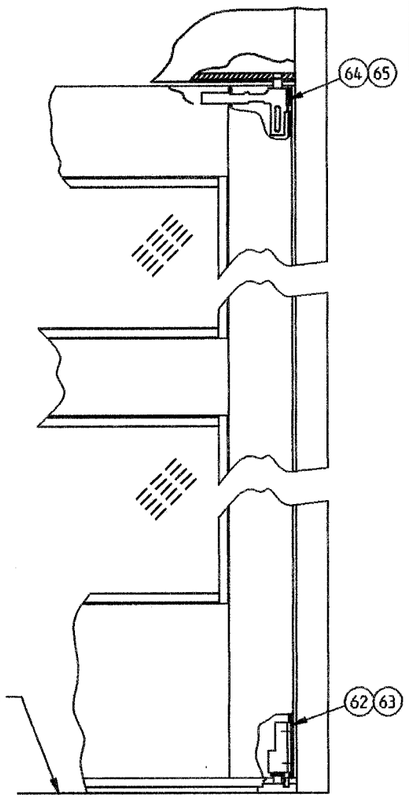

PIVOT DETAIL STATIONARY PANEL

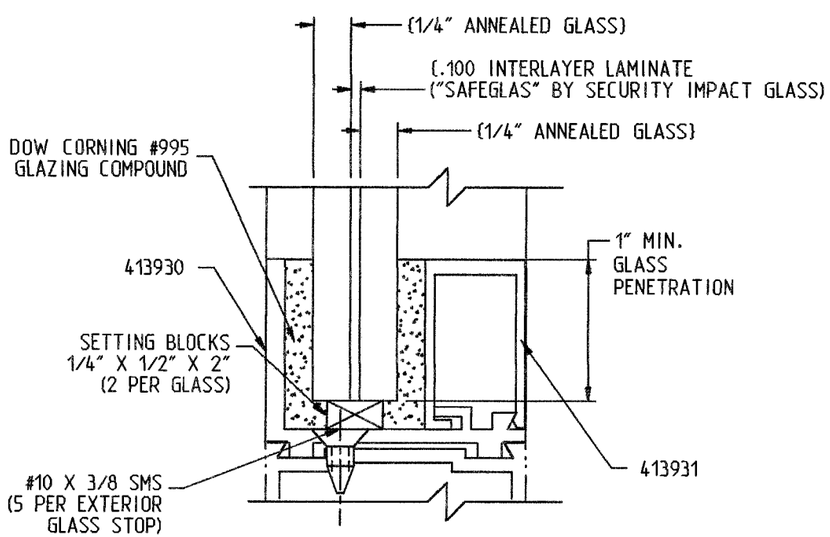

GLAZING DETAIL

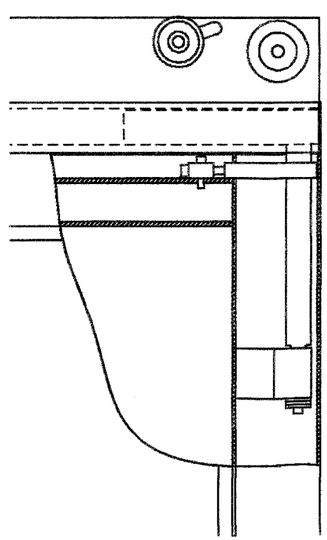

SX TOP PIVOT

Approved as complying with the Florida Buiding Code
Date APRIL 18, 2007
NOA# 01-0622.03
Miami Dade Product Control Division
By Ishaq I. Chanda

DRAWN: R.HABERERN 9/11/00	STANLEY ACCESS TECHNOLOGIES A DIVISION OF THE STANLEY WORKS 65 SCOTT SWAMP ROAD, FARMINGTON, CT. 06032		
CHECKED: G.NORTON 08/10/01			
APPROVED: G.NORTON 08/10/01	TITLE THRESHOLD, GLAZING, FLUSH BOLT, PIVOT DETAILS, IMPACT, REINFORCED PACKAGE		
MATERIAL: N/A	PRODUCT LINE DURA-STORM, 3000		
FINISH: N/A	SIZE B	DWG NO. 413925	REV E
	SCALE NONE	SHEET 7 OF 8	

DWG NO. 413925

DWG NO. 413925

ITEM	QTY	PART NO.	DESCRIPTION
1	1		DURA-STORM 3000 BI-PART, IMPACT
2	2	413089-1	JAMB INSERT
3	1	157541	JAMB ASSEMBLY, 4.500 X 1.750 X .100
4	1	157542	JAMB ASSEMBLY, 4.500 X 1.750 X .100
5	1	515260	THRESHOLD
	1	516339	THRESHOLD
	1	515262	THRESHOLD
	1	516340	THRESHOLD
6A	1	515686	HEADER COVER, 8.468 X 1.968 X .109
6B	1	110755	HEADER, 8.000 X 6.000 X .140
6C	1	515056	HEADERTRACK TUBE, 4.624 X 3.110 X .125
6D	1	413859	FOAM BLOCK - RH
6E	1	413869	FOAM BLOCK - LH
7	1	157508	DOOR PANEL, SX - RH
8	1	713241	THERM-L-BRUSH
9	1	710739	THERM-L-BRUSH
10	2	516711	FLUSH BOLT GUIDE
11	12	312063499	SCREW, FHM-PH 1/4-20 X 1/2 LG
12	2	713823	REINFORCEMENT, SECURITY HOOK, OUTSIDE
13	2	713822	REINFORCEMENT, SECURITY HOOK, INSIDE
14	2	713821	HOOK, SECURITY, MEDIUM STILE
15	1	380901499	NUT, HEX JAM, 5/16-18
16	1	353367000	SCREW, SHC-SK, 5/16-18 X 2.0 LG
17	1	412638	LABEL, CAUTION
18	2	413162	EXIT INDICATOR
19	1	412571	BLOCK-ANCHOR
20	1	413826	SPACER-PILLOW BLOCK
21	2	353349000	SCREW, SHM-SK, 1/4-20 X 1.0 LG
22	2	312073499	SCREW, FHM-PH, 1/4-20 X 2.0 LG
23	2	709221	LOCK, THUMBTURN
24	2	351801499	SCREW, SHC-SK, 1/4-20 X 3/8 LG
25	4	713321	SCREW, FHC-SK, #10-32 X 3/8 LG
26	1	157523	STILE, LOCK-SX, RH, 3.531 X 1.750 X .125
27	1	157517	STILE, PIVOT-SX, RH, 3.531 X 1.750 X .125
28	1	111879-2	HANGER ASSEMBLY-SX, RH
29	1	516329	RAIL, BOTTOM-SX, 9.625 X 1.595 X .140
30	4	312008960	SCREW, FHM-PH, #8-32 X 5/8LG
31	4	413821	FLUSH BOLT, ADAMS RITE 41-0444-03
32	2	413811	ROD ASS'Y, THROWBOLT ADAMS RITE 31-0278
33	6	711475	WASHER, TIE ROD
34	4	711474	NUT, TIE ROD
35	4	711483	ROD, TIE, 5/16-18 UNC-1A, STEEL, FULL LENGTH OF RAIL
36	8	706233	NUT, FLANGED
37	1	413810	LOCK, 2 POINT ADAMS RITE 1853A-35L-11, A1-0464-03
38	2	516338	CLIP, GUIDE
39	1	515265	BOTTOM GUIDE ASSEMBLY
40	1	516224	DETENT-DOOR PORTION
41	1	516643-1	RAIL, TOP-SX, RH, 2.875 X 1.735 X .093
42	2	706668	LOCK, CYLINDER
43	1	413805	SWEEP HOLDER
44	1	413741	BAR, MUNTIN, 4.250 X 1.735 X .093
45	8	413931	STOP, GLASS, IMPACT, 1.125 X .669
46	8	413930	GUTTER, IMPACT,1.219 X 1.735
47	4	412479	CLIP, GUIDE
48	1	411624	PILE, ADHESIVE BACKED
49	2	413857	FOAM BLOCK
50	1	413858	FOAM BLOCK
51	1	413856	FOAM BLOCK
52	2	516741	STEEL TUBE, ASTM A500, 1 1/4 X 1 1/4 X 3/16 X 90 7/8 LG
53	2	516743	STEEL TUBE, ASTM A500, 1 1/4 X 1 1/4 X 3/16 X 90 7/8 LG
54	1	157509	DOOR PANEL, SX - LH
			SAME AS 157508 EXCEPT AS NOTED
55	2	312251960	SCREW, FHM-PH, #10-32 X 1/2 LG
56	1	516552	STRIKE PLATE ASSEMBLY
57	1	157502	STILE, STRIKE-SX, LH, 3.531 X 1.750 X .125
58	1	157520	STILE, PIVOT-SX, LH, 3.531 X 1.750 X .125
59	1	111879-1	HANGER ASSEMBLY-SX, LH
60	1	516643-2	RAIL, TOP-SX, LH, 2.875 X 1.735 X .093
61	1	157510	DOOR PANEL, SO - RH
			SAME AS 157508 EXCEPT AS NOTED
62	2	312068499	SCREW, FHM-PH, 1/4-20 X 1.0 LG
63	1	410100	BOTTOM PIVOT-RH
64	5	713844	PIVOT-SELF TAPPING SCREW
65	1	413829	PIVOT ASSEMBLY (UPPER)-SO
66	2	711598	WIRE CLIP
67	1	712175	LOGO, STANLEY
68	1	711463-A	BREAK OUT SWITCH (MAGNET)
69	4	312024960	SCREW, FHM-PH, #10-24 X 3/8 LG
70	1	157521-1	STILE, TRAILING, SO-RH, 3.531 X 1.750 X .125
71	1	157503	STILE, LEAD, SO-RH, 3.531 X 1.750 X .125
72	1	516693-1	RAIL, TOP, SO-RH, 5.000 X 1.735 X .093
73	2	708867	BALL DETENT ASSEMBLY
75	2	312068499	SCREW, FHM-PH, 1/4-20 X 1.0 LG
76	2	713223	RIVNUT
77	1	413830	DAMPER ASSEMBLY
78	1	516742	STEEL TUBE, ASTM A500, 1 1/4 X 1 1/4 X 3/16 X 93 3/16 LG
79	2	516744	STEEL TUBE, ASTM A500, 1 1/4 X 1 1/4 X 3/16 X 93 3/16 LG
80	1	157511	DOOR PANEL, SO - LH
			SAME AS 157510 EXCEPT AS NOTED
81	1	410101	BOTTOM PIVOT-LH
82	1	157521	STILE, TRAILING, SO-LH, 3.531 X 1.750 X .125
83	1	157504	STILE, LEAD, SO-LH, 3.530 X 1.750 X .125
84	1	516693-2	RAIL, TOP, SO-LH, 5.000 X 1.735 X .093
85	1	516697	STEEL TUBE, ASTM A500, 1 1/4 X 1 1/4 X 3/16 X 93 3/16 LG
86	1		DURA-STORM 3000 SINGLE SLIDE, IMPACT
			SAME AS BI-PART EXCEPT AS NOTED
87	1	515193	LOCK, 2 POINT ADAMS RITE 1853A-390
88	2	312004960	SCREW, FHM-PH, #8-32 X 3/8 LG

NOTE: ALL EXTRUSIONS ARE MADE FROM 6063-T6 ALUMINUM

Approved as complying with the Florida Buiding Code
Date APRIL 18 2002
NOA# 01-0622.05
Miami Dade Product Control Division
By Stacy L. Chandler

DRAWN: R.HABERERN 9/11/00
CHECKED: G.NORTON 08/10/01
APPROVED: G.NORTON 08/10/01
MATERIAL: N/A
FINISH: N/A

STANLEY ACCESS TECHNOLOGIES
A DIVISION OF THE STANLEY WORKS
65 SCOTT SWAMP ROAD, FARMINGTON, CT. 06032

TITLE: BILL OF MATERIALS, IMPACT REINFORCED} PACKAGE
PRODUCT LINE: DURA-STORM 3000
SIZE: B
DWG NO.: 413925
REV: E
SCALE: 1:1
SHEET 8 OF 8

DWG NO. 413925