MIAMI-DADE

MIAMI-DADE COUNTY, FLORIDA
METRO-DADE FLAGLER BUILDING

BUILDING CODE COMPLIANCE OFFICE
METRO-DADE FLAGLER BUILDING
140 WEST FLAGLER STREET, SUITE 1603
MIAMI, FLORIDA 33130-1563
(305) 375-2901 FAX (305) 375-2908

CONTRACTOR LICENSING SECTION
(305) 375-2527 FAX (305) 375-2558

CONTRACTOR ENFORCEMENT DIVISION
(305) 375-2966 FAX (305) 375-2908

PRODUCT CONTROL DIVISION
(305) 375-2902 FAX (305) 372-6339

PRODUCT CONTROL NOTICE OF ACCEPTANCE

Bernardo Shutter Corporation
915 S. Dixie Hwy East
Pompano Beach ,FL 33060

Your application for Notice of Acceptance (NOA) of:
Extruded Aluminum Accordion Shutter
under Chapter 8 of the Code of Miami-Dade County governing the use of Alternate Materials and Types of Construction, and completely described herein, has been recommended for acceptance by the Miami-Dade County Building Code Compliance Office (BCCO) under the conditions specified herein.

This NOA shall not be valid after the expiration date stated below. BCCO reserves the right to secure this product or material at any time from a jobsite or manufacturer's plant for quality control testing. If this product or material fails to perform in the approved manner, BCCO may revoke, modify, or suspend the use of such product or material immediately. BCCO reserves the right to revoke this approval, if it is determined by BCCO that this product or material fails to meet the requirements of the South Florida Building Code.

The expense of such testing will be incurred by the manufacturer.

ACCEPTANCE NO.: 01-0709.08
EXPIRES: 09/07/2006

Raul Rodriguez
Chief Product Control Division

THIS IS THE COVERSHEET, SEE ADDITIONAL PAGES FOR SPECIFIC AND GENERAL CONDITIONS
BUILDING CODE & PRODUCT REVIEW COMMITTEE

This application for Product Approval has been reviewed by the BCCO and approved by the Building Code and Product Review Committee to be used in Miami-Dade County, Florida under the conditions set forth above.

Francisco J. Quintana, R.A.
Director
Miami-Dade County
Building Code Compliance Office

APPROVED: 09/27/2001

Bernardo Shutter Corporation

ACCEPTANCE No. : 01-0709.08

APPROVED : 09/27/2001

EXPIRES : 09/07/2006

NOTICE OF ACCEPTANCE: SPECIFIC CONDITIONS

1. SCOPE

This renews the Notice of Acceptance, No. 98-0911.03, which was issued on December 3, 1998. It approves an aluminum accordion type shutter, as described in Section 2 of this Notice of Acceptance, designed to comply with the South Florida Building Code, 1994 Edition for Miami-Dade County, for the locations where the pressure requirements, as determined by SFBC Chapter 23, do not exceed the Design Pressure Rating values indicated in the approved drawings.

2. PRODUCT DESCRIPTION

This aluminum accordion type shutter and its components shall be constructed in strict compliance with the following documents: Drawing No. 95-100, titled "Bernardo Shutter Corporation", prepared by Jenkins & Charland, Inc., signed and sealed by Gene S. Sanders, P.E., dated April 14, 1995, with last revision dated August 14, 2001, sheets 1 through 11 of 11, bearing the Miami-Dade County Product Control renewal stamp with the Notice of Acceptance number and expiration date by the Miami-Dade County Product Control Division. These documents shall hereinafter be referred to as the approved drawings.

3. LIMITATIONS

All permanent set components, included but not limited to embedded anchor bolts, threaded cones, metal shields, headers and sills, must be protected against corrosion, contamination and damage at all times.

4. INSTALLATION

This aluminum accordion type shutter and its components shall be installed in strict compliance with the approved drawings.

5. LABELING

Each unit shall bear a permanent label with the manufacturer's name or logo, city, state and the following statement: "Miami-Dade County Product Control Approved".

6. BUILDING PERMIT REQUIREMENTS

6.1 Application for building permit shall be accompanied by copies of the following:

6.1.1 This Notice of Acceptance.

6.1.2 Duplicate copies of the approved drawings, as identified in Section 2 of this Notice of Acceptance, clearly marked to show the components selected for the proposed installation.

6.1.3 Any other documents required by the Building Official or the South Florida Building Code (SFBC) in order to properly evaluate the installation of this system.

Helmy A. Makar, P.E.- Product Control Examiner
Product Control Division

Bernardo Shutter Corporation

ACCEPTANCE No. : 01-0709.08

APPROVED : 09/27/2001

EXPIRES : 09/07/2006

NOTICE OF ACCEPTANCE: STANDARD CONDITIONS

1 Renewal of this Acceptance (approval) shall be considered after a renewal application has been filed and the original submitted documents, including test-supporting data, engineering documents, are no older than eight (8) years.

2. Any and all approved products shall be permanently labeled with the manufacturer's name, city, state, and the following statement: "Miami-Dade County Product Control Approved", or as specifically stated in the specific conditions of this Acceptance.

3. Renewals of Acceptance will not be considered if:
   a. There has been a change in the South Florida Building Code affecting the evaluation of this product and the product is not in compliance with the code changes.
   b. The product is no longer the same product (identical) as the one originally approved.
   c. If the Acceptance holder has not complied with all the requirements of this acceptance, including the correct installation of the product.
   d. The engineer, who originally prepared, signed and sealed the required documentation initially submitted, is no longer practicing the engineering profession.

4. Any revision or change in the materials, use, and/or manufacture of the product or process shall automatically be cause for termination of this Acceptance, unless prior written approval has been requested (through the filing of a revision application with appropriate fee) and granted by this office.

5. Any of the following shall also be grounds for removal of this Acceptance:
   a. Unsatisfactory performance of this product or process.
   b. Misuse of this Acceptance as an endorsement of any product, for sales, advertising or any other purposes.

6. The Notice of Acceptance number preceded by the words Miami-Dade County, Florida, and followed by the expiration date may be displayed in advertising literature. If any portion of the Notice of Acceptance is displayed, then it shall be done in its entirety.

7. A copy of this Acceptance as well as approved drawings and other documents, where it applies, shall be provided to the user by the manufacturer or its distributors and shall be available for inspection at the job site at all time. The engineer needs not reseal the copies.

8. Failure to comply with any section of this Acceptance shall be cause for termination and removal of Acceptance.

9. This Notice of Acceptance consists of pages 1, 2 and this last page 3.

END OF THIS ACCEPTANCE

Helmy A. Makar, P.E.- Product Control Examiner
Product Control Division

SHUTTER ENTERPRISES GROUP INC.

POMPANO BEACH, FLORIDA 33060

ACCORDION SHUTTER

PRODUCT RENEWED
ACCEPTANCE No. 01-0709.08
EXPIRATION DATE 09/07/2006
By [signature]
PRODUCT CONTROL DIVISION
BUILDING CODE COMPLIANCE OFFICE

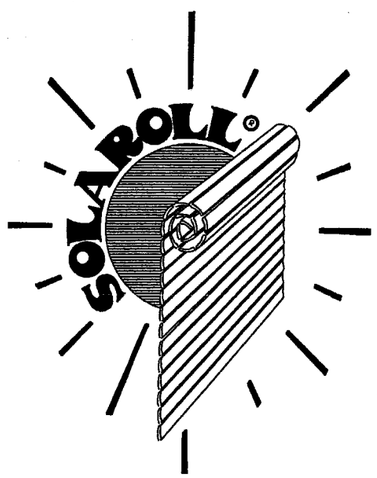

GENERAL NOTES

1.0 SHUTTER SYSTEM IS DESIGNED TO MEET THE REQUIREMENTS OF THE SOUTH FLORIDA BUILDING CODE. DADE COUNTY 1994 EDITION

1.1 DESIGN WIND PRESSURES SHALL BE DERIVED USING THE AMERICAN SOCIETY OF CIVIL ENGINEERS STANDARD ASCE 7-88 USING A FASTEST MILE WIND SPEED OF 110 MPH, COASTAL EXPOSURE C. THESE CHARTS SHALL BE USED FOR LOCATIONS WITHIN EXPOSURE D DEFINED AS 1500 FT. OF LARGE BODIES OF WATER (OR 10 TIMES THE BUILDING HEIGHT WHICHEVER IS GREATER).

2.0 ALUMINUM COMPONENTS ARE DESIGNED IN ACCORDANCE WITH THE "ALUMINUM CONSTRUCTION MANUAL".

3.0 THE ALUMINUM ALLOYS USED TO DERIVE THESE DESIGN CHARTS ARE AS SHOWN IN THE DRAWINGS.

4.0 STEEL SURFACES IN CONTACT WITH ALUMINUM COMPONENTS SHALL BE GALVANIZED OR HAVE ONE COAT OF ZINC CHROMATE PRIMER IN ACCORDANCE WITH FEDERAL SPEC TTP-645.

5.0 THE EMBEDMENT FOR ANCHORS SHOWN IN THESE DRAWINGS IS THE REQUIRED MINIMUM PENETRATION INTO THE BASE MATERIAL OF THE SUPPORTING STRUCTURE. MINIMUM EDGE DISTANCE (3 1/2") SHOWN IN THESE DRAWINGS INCLUDE A 1/2" ALLOWANCE FOR STUCCO.

6.0 BOLTS, NUTS AND WASHERS SHALL BE STAINLESS STEEL OR ALUMINUM ALLOY 2024-T4 OR 7075-T6 OR PLATED STEEL.

7.0 DEFLECTION DESIGN CRITERIA.

7.1 MULLIONS HAVE BEEN SIZED TO LIMIT THE DEFLECTION OF THE ELEMENTS TO ≤ L/180 AT THE DESIGN LOAD.

7.2 SLATS HAVE BEEN SIZED TO LIMIT THE DEFLECTION AT THE DESIGN LOAD TO BE ≤ L/30 FOR SUCTION AND THE LESSER OF L/30 OR 2 INCHES WHEN SUBJECTED TO POSITIVE PRESSURE.

7.3 SHUTTERS SHALL BE CONFIGURED TO HAVE NO LESS THAN THE MINIMUM CLEARANCE SHOWN IN THE DESIGN CURVES BETWEEN THE UNLOADED SLAT AND GLAZING. THE MINIMUM CLEARANCE IS THE SLAT DEFLECTION PLUS 1 INCH.

SEP 5 2001

TABLE OF CONTENTS

PAGE NO.	DESCRIPTION
1	GENERAL NOTES, TABLE OF CONTENTS
2	PLAN, SECTION, ELEVATION
3	COMPONENTS
4	4" ACCORDION SLAT
5	TRACK MOUNTING CONNECTIONS 1-2
6	TRACK MOUNTING CONNECTIONS 1A-2A
7	TRACK MOUNTING CONNECTIONS 3-4
8	TRACK MOUNTING CONNECTIONS 5-6
9	REMOVABLE TRACK 7
10	CORNER POST OPTIONS & END SLAT FASTENING
11	LOCK ASSEMBLY

PRODUCT MARKING

A LABEL SHALL BE PLACED ON THE FEMALE CENTER LOCK ABOVE THE LOCK ASSEMBLY, WITH THE FOLLOWING STATEMENT:

EXTRUDED ALUMINUM ACCORDION SHUTTER
DADE COUNTY PRODUCT CONTROL APPROVED
MANUFACTURED BY BERNARDO SHUTTER, CORP.

American Consulting Engineers Council Member
Supporting Excellence In Engineering

JENKINS & CHARLAND INCORPORATED Consulting Engineers
3559 N.W. 53rd Street
FORT LAUDERDALE, FL 33309
(305) 484-7777

TO THE BEST OF MY KNOWLEDGE AND ABILITY. THE COMPLETED STRUCTURE DEPICTED ON THESE PLANS COMPLIES WITH THE APPLICABLE MINIMUM BUILDING CODES.

PROF. ENGINEER
GENE S. SANDERS
FLA. PE # 26590

BERNARDO SHUTTER CORPORATION POMPANO BEACH, FLORIDA 33060		REVISED: 8-14-01
SCALE:	DRAWING NUMBER	DRAWN BY: VICKERY
DATE: 4-14-95	95-100	REVISED: 6-5-95
GENERAL NOTES & TABLE OF CONTENTS		REVISED: 6-17-96
		REVISED: 11-18-96
		PAGE NUMBER 1 OF 11

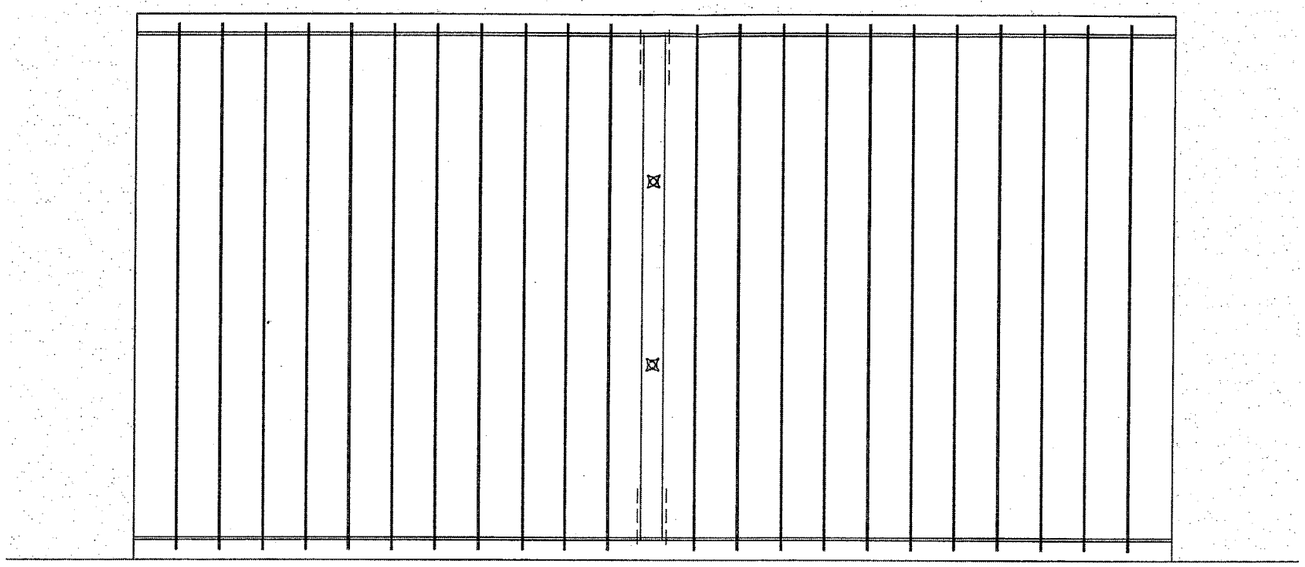

ELEVATION

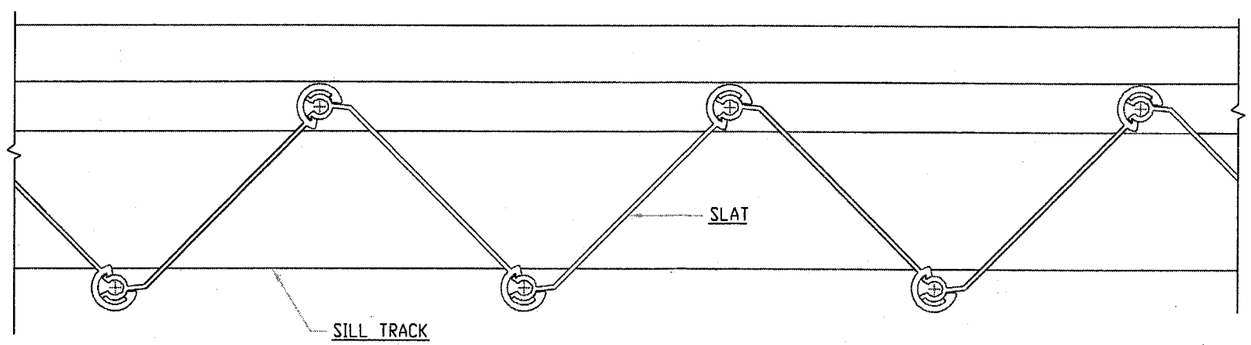

PLAN VIEW

PRODUCT RENEWED

ACCEPTANCE No. 01-0709.08

EXPIRATION DATE 09/07/2006

By Helena A. Melon

PRODUCT CONTROL DIVISION
BUILDING CODE COMPLIANCE OFFICE

American Consulting Engineers Council Member
Supporting Excellence in Engineering

JENKINS & CHARLAND INCORPORATED Consulting Engineers
2559 N.W. 53rd Street
FORT LAUDERDALE, FL 33309
(305) 484-7777

TO THE BEST OF MY KNOWLEDGE AND ABILITY THE COMPLETED STRUCTURE DEPICTED ON THESE PLANS COMPLIES WITH THE APPLICABLE MINIMUM BUILDING CODES.

PROF. ENGINEER
GENE S. SANDERS
FLA. PE # 26590

SEP 5 2001

BERNARDO SHUTTER CORPORATION
POMPANO BEACH, FLORIDA 33060

SCALE:	DRAWING NUMBER	DRAWN BY: VICKERY
DATE: 4-14-95	95-100	REVISED: 6-5-95
		REVISED: 6-17-96
		REVISED: 11-18-96
		PAGE NUMBER 2 OF 11

REVISED: 8-14-01

PLAN & ELEVATION

COMPONENTS

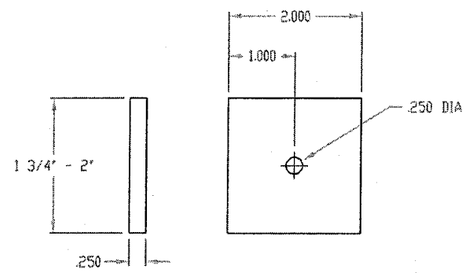

REINFORCING CLEAT
ALUM. 2" WIDE 1/4" THK.
ALLOY- 6061-T6

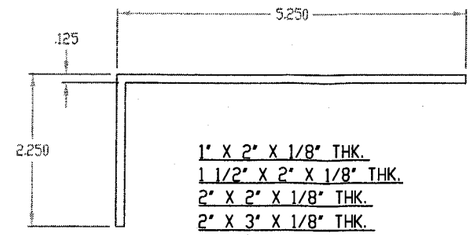

1" X 2" X 1/8" THK.
1 1/2" X 2" X 1/8" THK.
2" X 2" X 1/8" THK.
2" X 3" X 1/8" THK.
2" X 4" X 1/8" THK.
2 1/4" X 5 1/4"X 1/8" THK.

ALUMINUM ANGLE
ALLOY-6063-T5

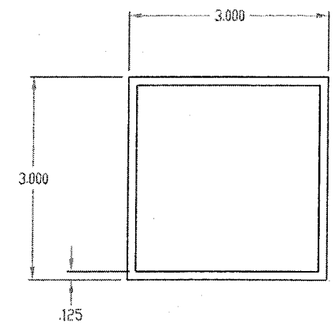

2" X 2" X 1/8" THK.
2" X 3" X 1/8" THK.
2" X 4" X 1/8" THK.
3" X 3" X 1/8" THK.
4" X 4" X 1/8" THK.

ALUMINUM TUBE
ALLOY-6063-T5

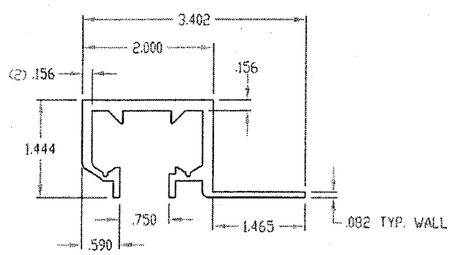

4" BLADE REGULAR TRACK
ALLOY-6063-T5

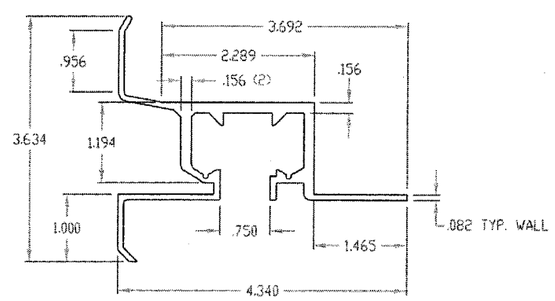

4" BLADE WALL MOUNT HEADER
ALLOY-6063-T5

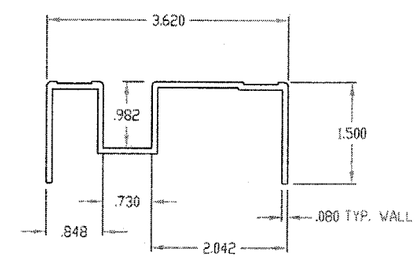

SILL TRACK
ALLOY-6063-T5

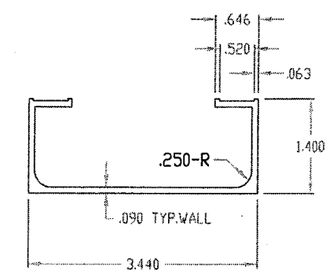

LEVELING CHANNEL
ALLOY-6063-T6

PRODUCT RENEWED
ACCEPTANCE No. 01-0709.08
EXPIRATION DATE 09/07/2006
By [signature]
PRODUCT CONTROL DIVISION
BUILDING CODE COMPLIANCE OFFICE

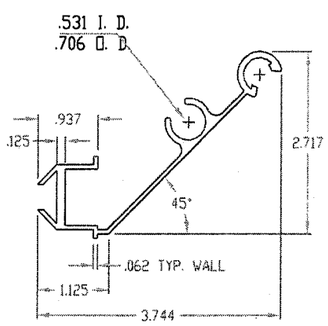

MALE CENTER LOCK
ALLOY-6063-T6

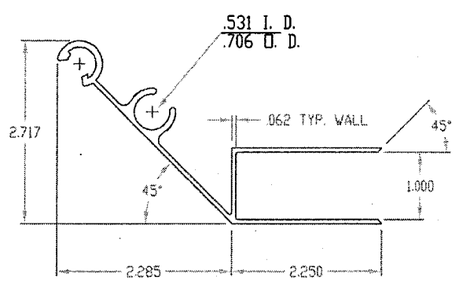

FEMALE CENTER LOCK
ALLOY-6063-T6

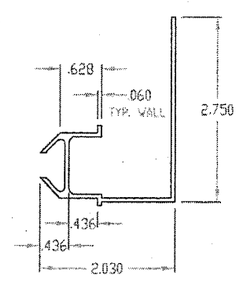

MALE SIDE LOCK
ALLOY-6063-T5

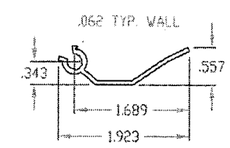

END SLAT
ALLOY-6063-T5

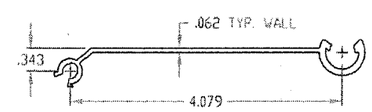

4" ACCORDION SLAT
ALLOY-6063-T6

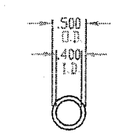

LOCK PIN
LENGTH VARIES
ALLOY-6063-T5

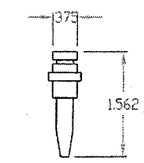

LOCK PIN INSERT
ALLOY-6063-T5

American Consulting Engineers Council Member
Supporting Excellence In Engineering

JENKINS & CHARLAND INCORPORATED
Consulting Engineers
3559 N.W. 53rd Street
FORT LAUDERDALE, FL 33309
(305) 484-7777

TO THE BEST OF MY KNOWLEDGE AND ABILITY, THE COMPLETED STRUCTURE DEPICTED ON THESE PLANS COMPLIES WITH THE APPLICABLE MINIMUM BUILDING CODES

PROF. ENGINEER
GENE S. SANDERS
FLA. PE # 26590
SEP 5 2001

BERNARDO SHUTTER CORPORATION POMPANO BEACH, FLORIDA 33060		REVISED: 8-14-01
SCALE:	DRAWING NUMBER 95-100	DRAWN BY: VICKERY
DATE: 4-14-95		REVISED: 6-5-95
COMPONENTS		REVISED: 6-17-96
		REVISED: 11-18-96
		PAGE NUMBER 3 OF 11

4" ACCORDION SLAT

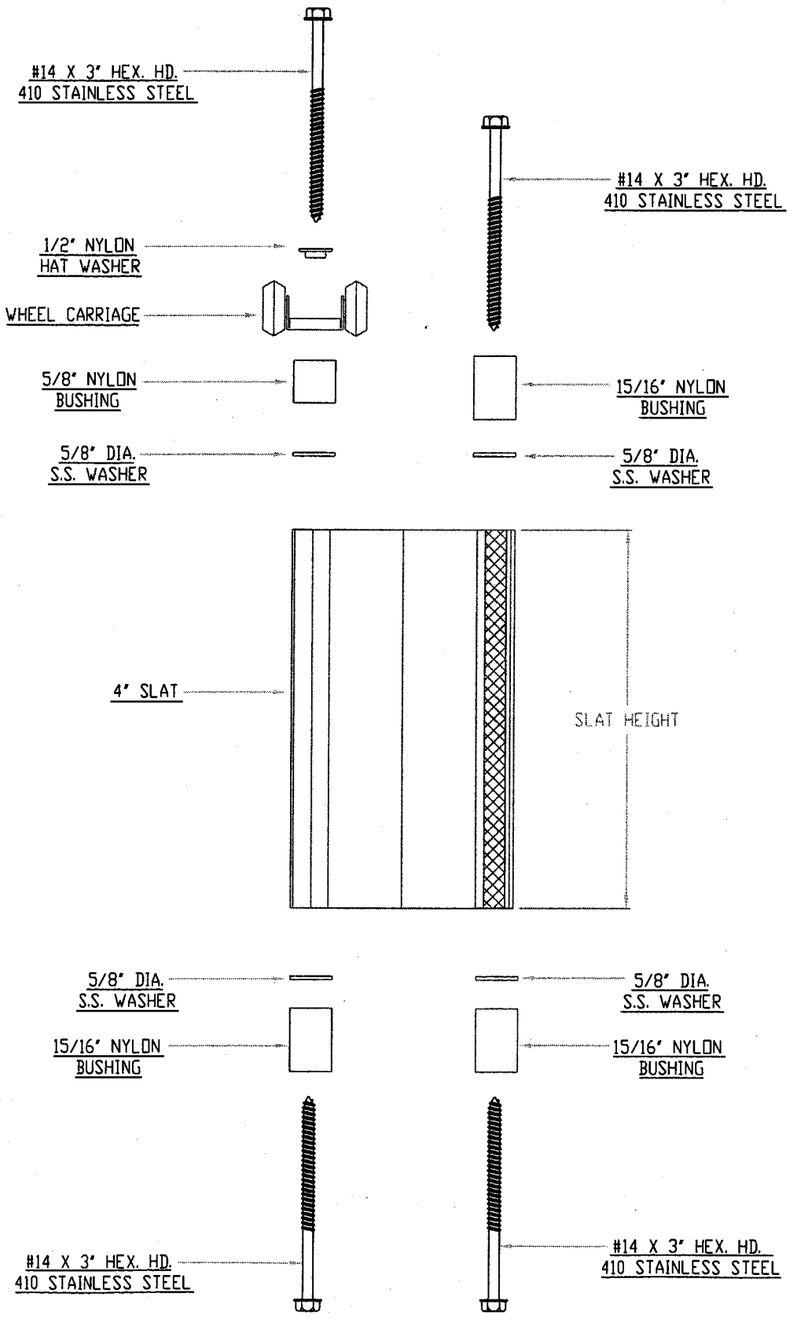

SLAT HEIGHT	DESIGN LOAD (PSF)
0 - 72"	±240
73" - 97"	±220
98" - 113"	±166
114" - 129"	±134
130" - 144"	±87

PRODUCT RENEWED
ACCEPTANCE No. 01-0709-08
EXPIRATION DATE 09/07/2006
By Helmy A. Malar
PRODUCT CONTROL DIVISION
BUILDING CODE COMPLIANCE OFFICE

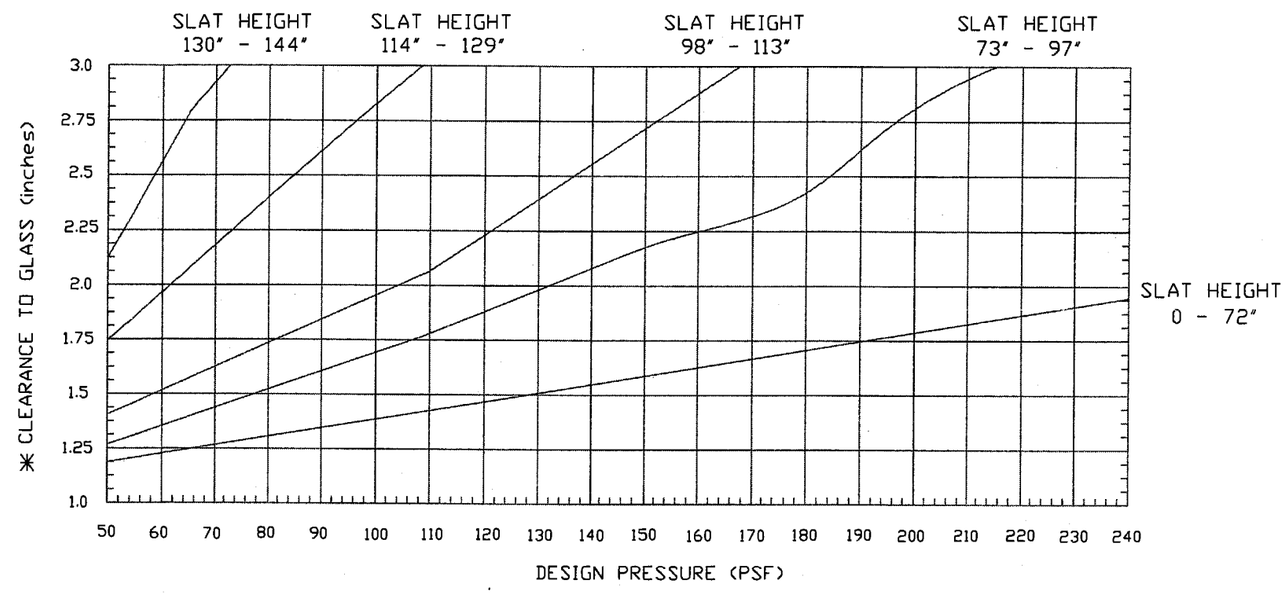

NOTE:

* CLEARANCE TO GLASS (inches)
INCLUDES THE 1" MINIMUM DISTANCE REQUIRED AT DESIGN LOAD.

0 -30' ELEVATION
MINIMUM CLEARANCE TO GLASS IS 3 1/2" ABOVE 30' REFER TO GRAPH ABOVE

American Consulting Engineers Council Member
Supporting Excellence In Engineering

JENKINS & CHARLAND INCORPORATED Consulting Engineers
3559 N.W. 53rd Street
FORT LAUDERDALE, FL 33309
(305) 484-7777

TO THE BEST OF MY KNOWLEDGE AND ABILITY, THE COMPLETED STRUCTURE DEPICTED ON THESE PLANS COMPLIES WITH THE APPLICABLE MINIMUM BUILDING CODES.

PROF. ENGINEER
GENE S. SANDERS
FLA. PE # 26590

SEP 5 2001

BERNARDO SHUTTER CORPORATION POMPANO BEACH, FLORIDA 33060		REVISED: 8-14-01
SCALE:	DRAWING NUMBER	DRAWN BY: VICKERY
DATE: 4-14-95	95-100	REVISED: 6-5-95
4" ACCORDIAN SLAT		REVISED: 6-17-96
		REVISED: 11-18-96
		PAGE NUMBER 4 OF 11

TRACK MOUNTING CONNECTIONS

1 ANGLE BUILD-OUT HEADER

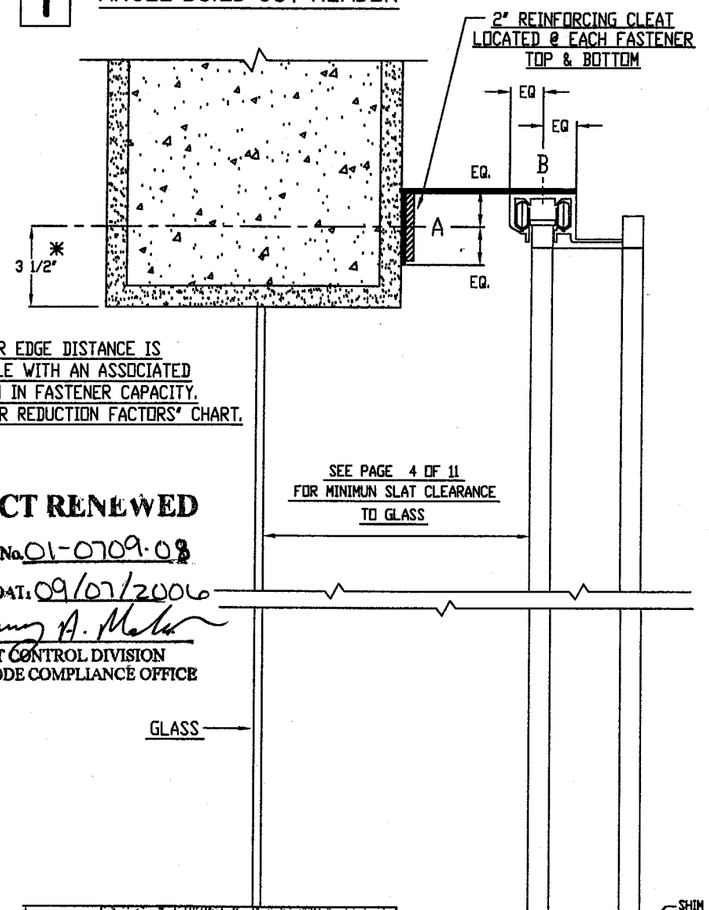

✱ SMALLER EDGE DISTANCE IS ACCEPTABLE WITH AN ASSOCIATED REDUCTION IN FASTENER CAPACITY. SEE "FASTENER REDUCTION FACTORS" CHART.

SEE PAGE 4 OF 11 FOR MINIMUN SLAT CLEARANCE TO GLASS

PRODUCT RENEWED

ACCEPTANCE No. 01-0709.08

EXPIRATION DAT. 09/07/2006

By Helmy A. Mahar

PRODUCT CONTROL DIVISION
BUILDING CODE COMPLIANCE OFFICE

APPROVED FASTENERS

FASTENER "A"

MANUF.	TYPE	DIA.	IMBED.
RAWL	TAPPER	.25	1.25
RAWL	CALK-IN	.25	.875
RAMSET	TAPCON	.25	1.25
RAMSET	NON-DRILL	1/4-20	1.125
WOOD	S.S. SCR	#14	2"

FASTENER "B"

MANUF.	TYPE	DIA.	HEIGHT
BOLT & NUT	18-8 S.S. STEEL	1/4-20	.75

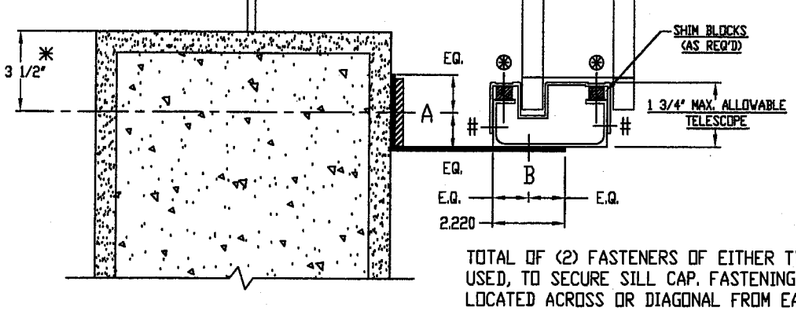

TOTAL OF (2) FASTENERS OF EITHER TYPE CAN BE USED, TO SECURE SILL CAP. FASTENING MUST BE LOCATED ACROSS OR DIAGONAL FROM EACH OTHER.

FASTENERS:

AD-66-ABC POP RIVET (16" O.C.)

⊛ #10 X 1" S.S.TRUSS HEAD (16" O.C.)

2 ANGLE BUILD-OUT SILL

FASTENER SPACING IN MASONRY/CONCRETE

CHARTS ARE BASED ON TYPICAL EDGE DISTANCE OF 3 1/2" [12dia. + 1/2" FOR STUCCO ALLOWANCE (SA).]

SPACING VALUES FOR INTERMEDIATE SLAT HEIGHTS & WIND PRESSURES MAY BE INTERPOLATED.

MASONRY

SLAT HEIGHT	DESIGN WIND PRESSURE psf 40	60	80	100	150	200	240
	FASTENER "A" SPACING						
60	10.8	7.2	5.4	4.3	2.9	--	--
72	9.0	6.0	4.5	3.6	--	--	--
97	6.7	4.4	3.3	2.7	--	--	--
113	5.7	3.8	2.9	--	--	--	--
129	5.0	3.3	2.5	--	--	--	--
144	4.5	3.0	--	--	--	--	--

CONCRETE f'c3

SLAT HEIGHT	DESIGN WIND PRESSURE psf 40	60	80	100	150	200	240
	FASTENER "A" SPACING						
60	24.0	24.0	24.0	21.2	14.2	10.6	8.9
72	24.0	24.0	22.1	17.7	11.8	8.9	7.4
97	24.0	21.9	16.4	13.1	8.8	6.6	5.5
113	24.0	18.8	14.1	11.3	7.5	5.6	--
129	24.0	16.5	12.4	9.9	6.6	--	--
144	22.1	14.8	11.1	8.9	--	--	--

REDUCED EDGE DISTANCE FASTENER SPACING IN MASONRY/CONCRETE

CHARTS ARE BASED ON REDUCED EDGE DISTANCE OF 1 3/4" [6dia. + 1/2" FOR STUCCO ALLOWANCE (SA).]

MASONRY

SLAT HEIGHT	DESIGN WIND PRESSURE psf 40	60	80	100	150	200	240
	FASTENER "A" SPACING						
60	5.4	3.6	2.7	--	--	--	--
72	4.5	3.0	--	--	--	--	--
97	3.3	--	--	--	--	--	--
113	2.8	--	--	--	--	--	--
129	2.5	--	--	--	--	--	--
144	--	--	--	--	--	--	--

CONCRETE f'c3

SLAT HEIGHT	DESIGN WIND PRESSURE psf 40	60	80	100	150	200	240
	FASTENER "A" SPACING						
60	24.0	17.7	13.3	10.6	7.1	5.3	4.4
72	22.1	14.7	11.0	8.8	5.9	4.4	3.7
97	16.4	10.9	8.2	6.5	4.4	3.3	2.7
113	14.1	9.4	7.0	5.6	3.7	2.8	--
129	12.3	8.2	6.2	4.9	3.3	--	--
144	11.0	7.4	5.5	4.4	--	--	--

WOOD

SLAT HEIGHT	DESIGN WIND PRESSURE psf 40	60	80
	FASTENER "A" SPACING		
60	24.0	19.4	14.6
72	24.0	16.2	12.1
97	18.0	12.0	9.0
113	15.5	10.3	7.7
129	13.5	9.0	6.8
144	12.1	8.1	6.1

FASTENER "B"

SLAT HEIGHT	DESIGN WIND PRESSURE psf 40	60	80	100	150	200	240
	FASTENER "B" SPACING						
60	24.0	24.0	24.0	24.0	19.5	14.6	12.2
72	24.0	24.0	24.0	24.0	16.3	12.2	10.2
97	24.0	24.0	22.6	18.1	12.1	9.1	7.5
113	24.0	24.0	19.4	15.6	10.4	7.8	--
129	24.0	22.7	17.0	13.6	9.1	--	--
144	24.0	20.3	15.3	12.2	--	--	--

American Consulting Engineers Council Member
Supporting Excellence in Engineering

JENKINS & CHARLAND
CONSULTING ENGINEERS
3559 N.W. 53rd Street
FORT LAUDERDALE, FL 33309
(305) 484-7777

TO THE BEST OF MY KNOWLEDGE AND ABILITY, THE COMPUTED STRUCTURE DEPICTED ON THESE PLANS COMPLIES WITH THE APPLICABLE MINIMUM BUILDING CODES.

PROF. ENGINEER
GENE S. SANDERS
FLA. PE # 26590

SEP 5 2001

BERNARDO SHUTTER CORPORATION
POMPANO BEACH, FLORIDA 33060

SCALE:
DATE: 4-14-95
DRAWING NUMBER 95-100
DRAWN BY: VICKERY
REVISED: 8-14-01
REVISED: 6-5-95
REVISED: 6-17-96
REVISED: 11-18-96
PAGE NUMBER 5 OF 11

TRACK MOUNTING CONNECTION

TRACK MOUNTING CONNECTIONS

1A ANGLE BUILD-OUT HEADER REVERSE

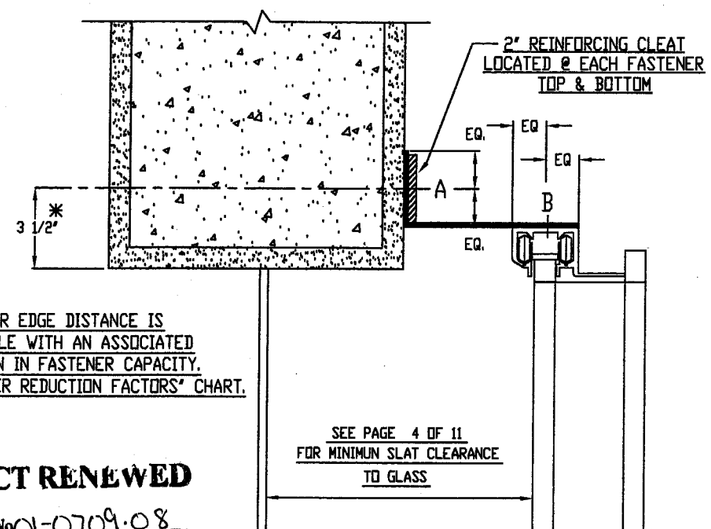

✳ SMALLER EDGE DISTANCE IS ACCEPTABLE WITH AN ASSOCIATED REDUCTION IN FASTENER CAPACITY. SEE 'FASTENER REDUCTION FACTORS' CHART.

PRODUCT RENEWED
ACCEPTANCE No. 01-0709.08
EXPIRATION DAT. 09/07/2006
By Helmy A. Mahar
PRODUCT CONTROL DIVISION
BUILDING CODE COMPLIANCE OFFICE

APPROVED FASTENERS

FASTENER "A"

MANUF.	TYPE	DIA.	IMBED.
RAWL	TAPPER	.25	1.25
RAWL	CALK-IN	.25	.875
RAMSET	TAPCON	.25	1.25
RAMSET	NON-DRILL	1/4-20	1.125
WOOD	S.S. SCR	#14	2"

FASTENER "B"

MANUF.	TYPE	DIA.	HEIGHT
BOLT & NUT	18-8 S.S. STEEL	1/4-20	.75

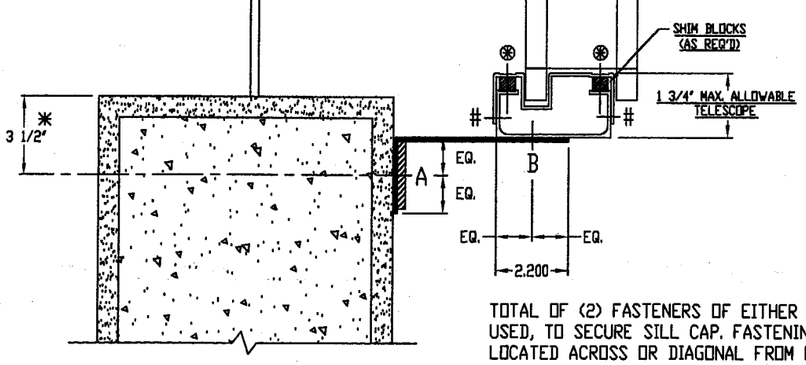

TOTAL OF (2) FASTENERS OF EITHER TYPE CAN BE USED, TO SECURE SILL CAP. FASTENING MUST BE LOCATED ACROSS OR DIAGONAL FROM EACH OTHER.

FASTENERS:
AD-66-ABC POP RIVET (16" O.C.)
⊛ #10 X 1" S.S.TRUSS HEAD (16" O.C.)

2A ANGLE BUILD-OUT SILL

FASTENER SPACING IN MASONRY/CONCRETE

CHARTS ARE BASED ON TYPICAL EDGE DISTANCE OF 3 1/2" [12dia. + 1/2" FOR STUCCO ALLOWANCE (SA).]

SPACING VALUES FOR INTERMEDIATE SLAT HEIGHTS & WIND PRESSURES MAY BE INTERPOLATED.

MASONRY

SLAT HEIGHT	DESIGN WIND PRESSURE psf 40	60	80	100	150	200	240
	FASTENER 'A' SPACING						
60	4.4	3.1	--	--	--	--	--
72	3.7	2.6	--	--	--	--	--
97	2.7	--	--	--	--	--	--
113	--	--	--	--	--	--	--
129	--	--	--	--	--	--	--
144	--	--	--	--	--	--	--

CONCRETE f'c3

SLAT HEIGHT	DESIGN WIND PRESSURE psf 40	60	80	100	150	200	240
	FASTENER 'A' SPACING						
60	21.9	15.2	11.6	9.4	6.4	4.8	4.1
72	18.3	12.7	9.7	7.9	5.3	4.0	3.4
97	13.6	9.4	7.2	5.8	4.0	3.0	2.5
113	11.6	8.1	6.2	5.0	3.4	2.6	--
129	10.2	7.1	5.4	4.4	3.0	--	--
144	9.1	6.3	4.9	3.9	--	--	--

REDUCED EDGE DISTANCE FASTENER SPACING IN CONCRETE

CHARTS ARE BASED ON REDUCED EDGE DISTANCE OF 1 3/4" [6dia. + 1/2" FOR STUCCO ALLOWANCE (SA).]

CONCRETE f'c3

SLAT HEIGHT	DESIGN WIND PRESSURE psf 40	60	80	100	150	200	240
	FASTENER 'A' SPACING						
60	10.9	7.6	5.8	4.7	3.2	--	--
72	9.1	6.3	4.8	3.8	2.6	--	--
97	6.8	4.7	3.6	2.9	--	--	--
113	5.8	4.0	3.1	2.5	--	--	--
129	5.1	3.5	2.7	--	--	--	--
144	4.5	3.1	--	--	--	--	--

SPECIAL CONDITION

2 1/4" X 5 1/4" X 1/8"
(REVERSED ANGLE BUILD-OUT)

MAXIMUM ALLOWABLE FASTENER SPACING IS LIMITED TO THE FOLLOWING:

HEIGHT	SPACING
0 - 112"	24"
113"	23.9
129"	20.9
144"	18.7

THESE LIMITS SHOULD BE APPLIED AFTER STANDARD SPACING HAS BEEN DETERMINED AND ANY FACTORING FOR REDUCED EDGE DISTANCE, IF APPLICABLE, HAS TAKEN PLACE.

WOOD

SLAT HEIGHT	DESIGN WIND PRESSURE psf 40	60	80
	FASTENER 'A' SPACING		
60	12.0	8.3	6.4
72	10.0	7.0	5.3
97	7.4	5.2	4.0
113	6.4	4.4	3.4
129	5.6	3.9	3.0
144	5.0	3.5	2.7

FASTENER 'B'

SLAT HEIGHT	DESIGN WIND PRESSURE psf 40	60	80	100	150	200	240
	FASTENER 'B' SPACING						
60	24.0	24.0	24.0	24.0	19.5	14.6	12.2
72	24.0	24.0	24.0	24.0	16.3	12.2	10.2
97	24.0	24.0	22.6	18.1	12.1	9.1	7.5
113	24.0	24.0	19.4	15.6	10.4	7.8	--
129	24.0	22.7	17.0	13.6	9.1	--	--
144	24.0	20.3	15.3	12.2	--	--	--

American Consulting Engineers Council Member
Supporting Excellence in Engineering

JENKINS & CHARLAND
Consulting Engineers
2859 N.W. 33rd Street
FORT LAUDERDALE, FL 33309
(305) 484-7777
TO THE BEST OF MY KNOWLEDGE AND ABILITY, THE COMPLETED STRUCTURE REFLECTED ON THESE PLANS COMPLIES WITH THE APPLICABLE MINIMUM BUILDING CODES.

PROF. ENGINEER
GENE S. SANDERS
FLA. PE # 26590
SEP 5 2001

BERNARDO SHUTTER CORPORATION
POMPANO BEACH, FLORIDA 33060

SCALE	DRAWING NUMBER	DRAWN BY: VICKERY
DATE: 4-14-95	95-100	REVISED: 6-5-95
		REVISED: 6-17-96
		REVISED: 11-18-96
		PAGE NUMBER 6 OF 11

REVISED: 8-14-01

TRACK MOUNTING CONNECTION

TRACK MOUNTING CONNECTIONS

3 CEILING MOUNT

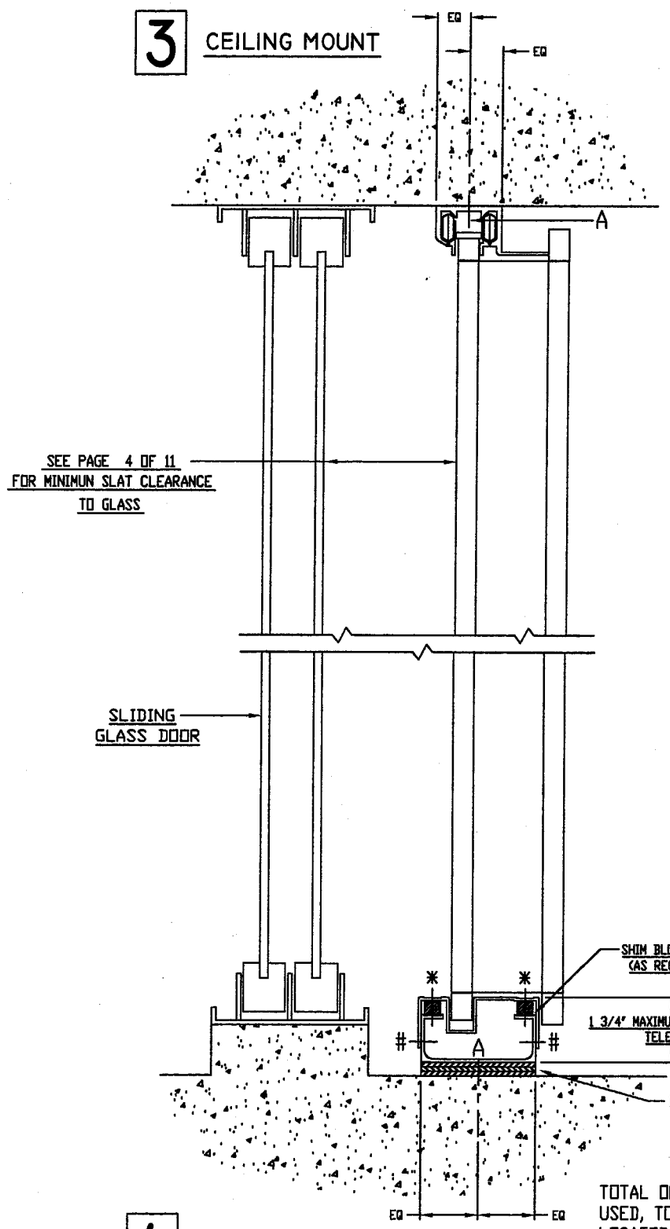

4 FLOOR MOUNT

TOTAL OF (2) FASTENERS OF EITHER TYPE CAN BE USED, TO SECURE SILL CAP. FASTENING MUST BE LOCATED ACROSS OR DIAGONAL FROM EACH OTHER.

FASTENERS:

AD-66-ABC POP RIVET (16" O.C.)

⊛ #10 X 1" S.S.TRUSS HEAD (16" O.C.)

APPROVED FASTENERS

FASTENER "A" & "B"

MANUF.	TYPE	DIA.	IMBED.
RAWL	TAPPER	.25	1.50
RAWL	CALK-IN	.25	.875
RAMSET	TAPCON	.25	1.50
RAMSET	NON-DRILL	1/4-20	1.125
WOOD	S.S. SCR	#14	2"

FASTENER SPACING IN MASONRY/CONCRETE

CHARTS ARE BASED ON TYPICAL EDGE DISTANCE OF 3 1/2" [12dia. + 1/2" FOR STUCCO ALLOWANCE (SA)]

SPACING VALUES FOR INTERMEDIATE SLAT HEIGHTS & WIND PRESSURES MAY BE INTERPOLATED.

MASONRY

SLAT HEIGHT	DESIGN WIND PRESSURE psf 40	60	80	100	150	200	240
	FASTENER "A" SPACING						
60	10.7	7.2	5.4	4.3	2.9	--	--
72	8.9	6.0	4.5	3.6	--	--	--
97	6.6	4.4	3.3	2.7	--	--	--
113	5.7	3.8	2.8	--	--	--	--
129	5.0	3.3	2.5	--	--	--	--
144	4.5	3.0	--	--	--	--	--

CONCRETE f'c3

SLAT HEIGHT	DESIGN WIND PRESSURE psf 40	60	80	100	150	200	240
	FASTENER "A" SPACING						
60	24.0	24.0	24.0	24.0	17.0	12.7	10.6
72	24.0	24.0	24.0	21.2	14.2	10.6	8.8
97	24.0	24.0	19.7	15.8	10.5	7.9	6.6
113	24.0	22.6	16.9	13.5	9.0	6.8	--
129	24.0	19.8	14.8	11.9	7.9	--	--
144	24.0	17.7	13.3	10.6	--	--	--

REDUCED EDGE DISTANCE FASTENER SPACING IN MASONRY/CONCRETE

CHARTS ARE BASED ON REDUCED EDGE DISTANCE OF 1 3/4" [6dia. + 1/2" FOR STUCCO ALLOWANCE (SA).]

MASONRY

SLAT HEIGHT	DESIGN WIND PRESSURE psf 40	60	80	100	150	200	240
	FASTENER "A" SPACING						
60	5.3	3.6	2.7	--	--	--	--
72	4.4	3.0	--	--	--	--	--
97	3.3	--	--	--	--	--	--
113	2.8	--	--	--	--	--	--
129	2.5	--	--	--	--	--	--
144	--	--	--	--	--	--	--

CONCRETE f'c3

SLAT HEIGHT	DESIGN WIND PRESSURE psf 40	60	80	100	150	200	240
	FASTENER "A" SPACING						
60	24.0	21.2	15.9	12.7	8.5	6.3	5.6
72	24.0	17.7	13.2	10.6	7.1	5.3	4.4
97	19.7	13.1	9.8	7.9	5.2	3.9	3.3
113	16.9	11.3	8.4	6.7	4.5	3.4	--
129	14.8	9.9	7.4	5.9	3.9	--	--
144	13.2	8.8	6.6	5.3	--	--	--

WOOD

SLAT HEIGHT	DESIGN WIND PRESSURE psf 40	60	80
	FASTENER "A" SPACING		
60	22.0	14.7	11.0
72	18.3	12.2	9.2
97	13.6	9.1	6.8
113	11.7	7.8	5.8
129	10.2	6.8	5.1
144	9.2	6.1	4.6

PRODUCT RENEWED

ACCEPTANCE No. 01-0709.08

EXPIRATION DAT. 09/07/2006

By Helmy A. Mekar

PRODUCT CONTROL DIVISION
BUILDING CODE COMPLIANCE OFFICE

American Consulting Engineers Council Member
Supporting Excellence in Engineering

JENKINS & CHARLAND
3259 N.W. 33rd Street
FORT LAUDERDALE, FL 33309
(305) 484-7777

TO THE BEST OF MY KNOWLEDGE AND ABILITY, THE COMPLETED STRUCTURE DEPICTED ON THESE PLANS COMPLIES WITH THE APPLICABLE HIGHRISE BUILDING CODES.

PROF. ENGINEER
GENE S. SANDERS
FLA. PE # 26590

SEP 5 2001

REVISED	8-14-01
BERNARDO SHUTTER CORPORATION POMPANO BEACH, FLORIDA 33060	
SCALE:	DRAWING NUMBER 95-100
DATE: 4-14-95	DRAWN BY: VICKERY
	REVISED 6-5-95
TRACK MOUNTING CONNECTION 3 & 4	REVISED 6-17-96
	REVISED 11-18-96
	PAGE NUMBER 7 OF 11

TRACK MOUNTING CONNECTIONS

5 FLUSH MOUNT TOP

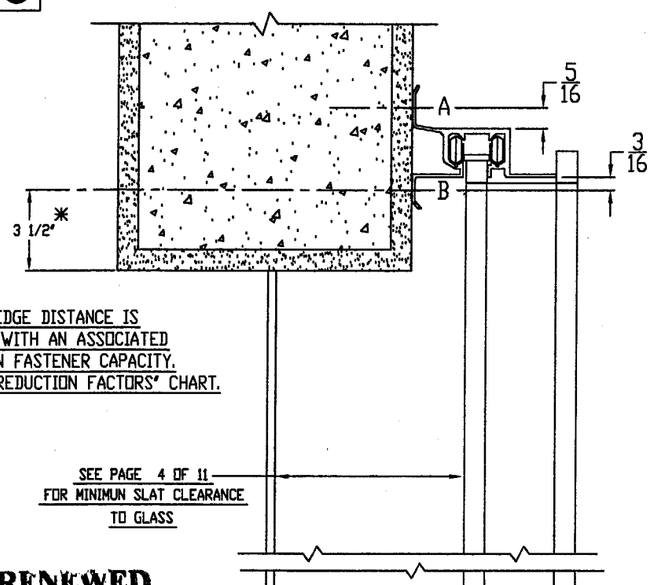

* SMALLER EDGE DISTANCE IS ACCEPTABLE WITH AN ASSOCIATED REDUCTION IN FASTENER CAPACITY. SEE "FASTENER REDUCTION FACTORS" CHART.

SEE PAGE 4 OF 11 FOR MINIMUN SLAT CLEARANCE TO GLASS

GLASS

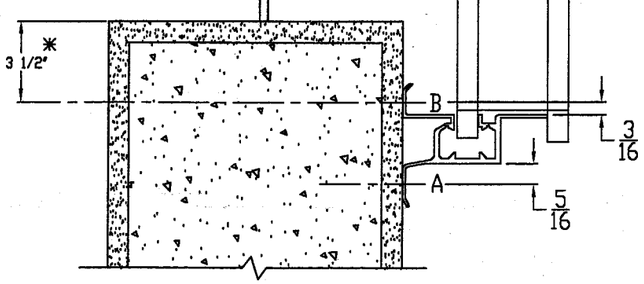

6 FLUSH MOUNT BOTTOM

PRODUCT RENEWED

ACCEPTANCE No. 01-0709.08

EXPIRATION DAT. 09/07/2006

By Helmy A. Mahr

PRODUCT CONTROL DIVISION
BUILDING CODE COMPLIANCE OFFICE

APPROVED FASTENERS

FASTENER "A" & "B"

MANUF.	TYPE	DIA.	IMBED.
RAWL	TAPPER	.25	1.50
RAWL	CALK-IN	.25	.875
RAMSET	TAPCON	.25	1.50
RAMSET	NON-DRILL	1/4-20	1.125
WOOD	S.S. SCR	#14	2"

FASTENER SPACING IN MASONRY/CONCRETE

CHARTS ARE BASED ON TYPICAL EDGE DISTANCE OF 3 1/2" [12dia. + 1/2" FOR STUCCO ALLOWANCE (SA)]

SPACING VALUES FOR INTERMEDIATE SLAT HEIGHTS & WIND PRESSURES MAY BE INTERPOLATED.

MASONRY

SLAT HEIGHT	DESIGN WIND PRESSURE psf 40	60	80	100	150	200	240
	FASTENER "A" SPACING						
60	24.0	24.0	24.0	24.0	21.1	15.9	13.3
72	24.0	24.0	24.0	24.0	17.6	13.3	11.1
97	24.0	24.0	24.0	19.6	13.1	9.9	8.3
113	24.0	24.0	20.9	16.8	11.3	8.5	--
129	24.0	24.0	18.4	14.8	9.9	--	--
144	24.0	21.8	16.5	13.2	--	--	--
	FASTENER "B" SPACING						
60	23.4	15.7	11.8	9.5	6.3	4.8	4.0
72	19.5	13.1	9.7	7.9	5.3	4.0	3.3
97	14.6	9.8	7.3	5.9	3.9	3.0	2.5
113	12.5	8.4	6.3	5.1	3.4	2.5	--
129	11.0	7.4	5.5	4.4	3.0	--	--
144	9.9	6.6	5.0	4.0	--	--	--

CONCRETE f'c3

SLAT HEIGHT	DESIGN WIND PRESSURE psf 40	60	80	100	150	200	240
	FASTENER "A" SPACING						
60	24.0	24.0	24.0	24.0	24.0	24.0	24.0
72	24.0	24.0	24.0	24.0	24.0	24.0	24.0
97	24.0	24.0	24.0	24.0	24.0	24.0	24.0
113	24.0	24.0	24.0	24.0	24.0	24.0	--
129	24.0	24.0	24.0	24.0	24.0	--	--
144	24.0	24.0	24.0	24.0	--	--	--
	FASTENER "B" SPACING						
60	24.0	24.0	24.0	24.0	24.0	24.0	24.0
72	24.0	24.0	24.0	24.0	24.0	24.0	22.1
97	24.0	24.0	24.0	24.0	24.0	19.7	16.4
113	24.0	24.0	24.0	24.0	22.5	16.9	--
129	24.0	24.0	24.0	24.0	19.7	--	--
144	24.0	24.0	24.0	24.0	--	--	--

REDUCED EDGE DISTANCE FASTENER SPACING IN MASONRY/CONCRETE

CHARTS ARE BASED ON REDUCED EDGE DISTANCE OF 1 3/4" [6dia. + 1/2" FOR STUCCO ALLOWANCE (SA).]

MASONRY

SLAT HEIGHT	DESIGN WIND PRESSURE psf 40	60	80	100	150	200	240
	FASTENER "A" SPACING						
60	24.0	24.0	19.4	15.6	10.5	7.9	6.6
72	24.0	21.4	16.2	13.1	8.8	6.6	5.5
97	23.5	16.0	12.1	9.8	6.5	4.9	4.1
113	20.3	13.8	10.4	8.4	5.6	4.2	--
129	17.8	12.1	9.2	7.4	4.9	--	--
144	16.0	10.9	8.2	6.6	--	--	--
	FASTENER "B" SPACING						
60	11.7	7.8	5.9	4.7	3.1	--	--
72	9.7	6.5	4.8	3.9	2.6	--	--
97	7.3	4.9	3.6	2.9	--	--	--
113	6.2	4.2	3.1	2.5	--	--	--
129	5.5	3.7	2.7	--	--	--	--
144	4.9	3.3	2.5	--	--	--	--

CONCRETE f'c3

SLAT HEIGHT	DESIGN WIND PRESSURE psf 40	60	80	100	150	200	240
	FASTENER "A" SPACING						
60	24.0	24.0	24.0	24.0	24.0	24.0	24.0
72	24.0	24.0	24.0	24.0	24.0	24.0	24.0
97	24.0	24.0	24.0	24.0	24.0	24.0	24.0
113	24.0	24.0	24.0	24.0	24.0	24.0	--
129	24.0	24.0	24.0	24.0	24.0	--	--
144	24.0	24.0	24.0	24.0	--	--	--
	FASTENER "B" SPACING						
60	24.0	24.0	24.0	24.0	21.1	15.8	13.2
72	24.0	24.0	24.0	24.0	17.6	13.2	11.0
97	24.0	24.0	24.0	19.6	13.1	9.8	8.2
113	24.0	24.0	21.0	16.8	11.2	8.4	--
129	24.0	24.0	18.4	14.7	9.8	--	--
144	24.0	21.9	16.5	13.2	--	--	--

WOOD

SLAT HEIGHT	DESIGN WIND PRESSURE psf 40	60	80
	FASTENER "A" SPACING		
60	24.0	24.0	24.0
72	24.0	24.0	24.0
97	24.0	24.0	24.0
113	24.0	24.0	24.0
129	24.0	24.0	24.0
144	24.0	24.0	24.0
	FASTENER "B" SPACING		
60	24.0	24.0	24.0
72	24.0	24.0	24.0
97	24.0	24.0	19.5
113	24.0	22.1	16.7
129	24.0	19.4	14.7
144	24.0	17.3	13.1

American Consulting Engineers Council Member
Supporting Excellence in Engineering

JENKINS & CHARLAND
3859 N.W. 53rd Street
FORT LAUDERDALE, FL 33309
(305) 484-7777

TO THE BEST OF MY KNOWLEDGE AND ABILITY, THE COMPLETED STRUCTURE REFLECTED ON THESE PLANS COMPLIES WITH THE APPLICABLE MIAMI-DADE BUILDING CODES.

PROF. ENGINEER
GENE S. SANDERS
FLA PE # 26590

SEP 5 2001

REVISED 8-14-01

BERNARDO SHUTTER CORPORATION
POMPANO BEACH, FLORIDA 33060

SCALE:	DRAWING NUMBER	DRAWN BY: VICKERY
DATE: 4-14-95	95-100	REVISED 6-5-95
TRACK MOUNTING CONNECTION 5 & 6		REVISED 6-17-96
		REVISED 11-18-96
		PAGE NUMBER 8 OF 11

REMOVABLE TRACK

FASTENER SPACING IN CONCRETE

CHARTS ARE BASED ON TYPICAL EDGE DISTANCE OF 3 1/2"
[12dia. + 1/2" FOR STUCCO ALLOWANCE (SA).]

SPACING VALUES FOR INTERMEDIATE SLAT HEIGHTS & WIND PRESSURES MAY BE INTERPOLATED.

CONCRETE f'c3

SLAT HEIGHT psf	DESIGN WIND PRESSURE 40	60	80	100	150	200	240
	FASTENER "A" SPACING						
60	24.0	24.0	24.0	24.0	24.0	19.8	16.5
72	24.0	24.0	24.0	24.0	22.0	16.5	13.7
97	24.0	24.0	24.0	24.0	16.3	12.2	10.2
113	24.0	24.0	24.0	21.0	14.0	10.5	--
129	24.0	24.0	23.0	18.4	12.3	--	--
144	24.0	24.0	20.6	16.5	--	--	--

WOOD

SLAT HEIGHT psf	DESIGN WIND PRESSURE 40	60	80
	FASTENER "A" SPACING		
60	24.0	17.9	13.4
72	22.3	14.9	11.2
97	16.6	11.1	8.3
113	14.2	9.5	7.1
129	12.5	8.3	6.2
144	11.2	7.4	5.6

REDUCED EDGE DISTANCE FASTENER SPACING IN CONCRETE

CHARTS ARE BASED ON REDUCED EDGE DISTANCE OF 1 3/4"
[6dia. + 1/2" FOR STUCCO ALLOWANCE (SA).]

CONCRETE f'c3

SLAT HEIGHT psf	DESIGN WIND PRESSURE 40	60	80	100	150	200	240
	FASTENER "A" SPACING						
60	24.0	24.0	24.0	19.8	13.2	9.9	8.2
72	24.0	24.0	20.6	16.5	11.0	8.2	6.8
97	24.0	20.4	15.3	12.2	8.1	6.1	5.1
113	24.0	17.5	13.1	10.5	7.0	5.2	--
129	23.0	15.3	23.0	9.2	6.1	--	--
144	20.6	13.7	10.3	8.2	--	--	--

7 REMOVABLE TRACK

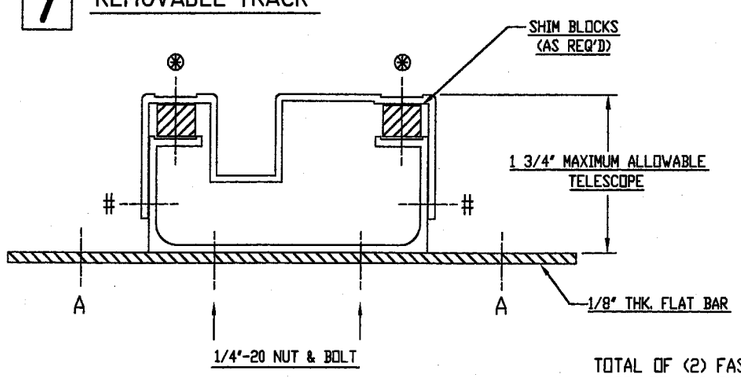

APPROVED FASTENERS

FASTENER "A"

MANUF.	TYPE	DIA.	IMBED.
RAMSET	NON-DRILL	1/4-20	1.125
RAWL	CALK-IN	1/4-20	.875
	WOOD BUSHING	1/4-20	.875

TOTAL OF (2) FASTENERS OF EITHER TYPE CAN BE USED, TO SECURE SILL CAP. FASTENING MUST BE LOCATED ACROSS OR DIAGONAL FROM EACH OTHER.

FASTENERS:
AD-66-ABC POP RIVET (16" O.C.)
⊛ #10 X 1" S.S.TRUSS HEAD (16" O.C.)

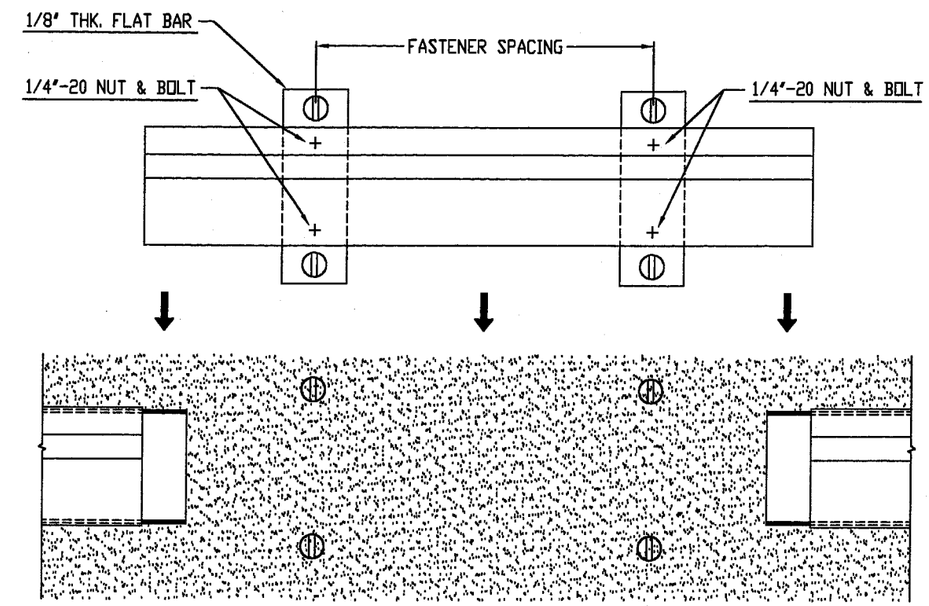

TOP VIEW

PRODUCT RENEWED
ACCEPTANCE No. 01-0709.08
EXPIRATION DATE 09/07/2006
By [signature]
PRODUCT CONTROL DIVISION
BUILDING CODE COMPLIANCE OFFICE

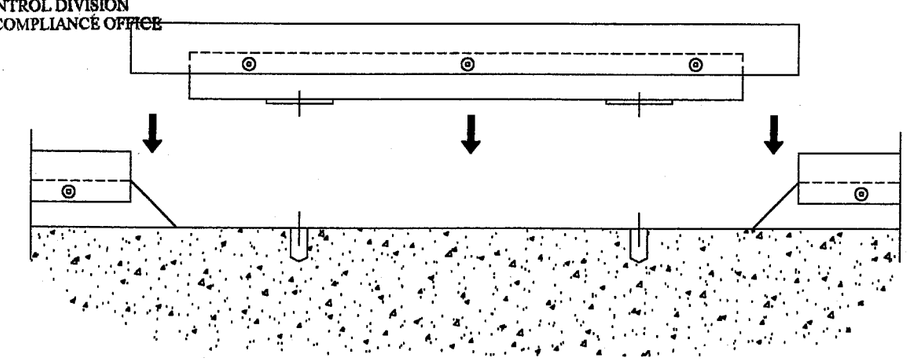

ELEVATION

American Consulting Engineers Council Member
Supporting Excellence in Engineering

JENKINS & CHARLAND
3539 N.W. 53rd Street
FORT LAUDERDALE, FL 33309
(305) 484-7777

TO THE BEST OF MY KNOWLEDGE AND ABILITY, THE COMPLETED STRUCTURE DEPICTED ON THESE PLANS COMPLIES WITH THE APPLICABLE MINIMUM BUILDING CODES.

PROF. ENGINEER
GENE S. SANDERS
FLA. PE # 26590

SEP 5 2001

BERNARDO SHUTTER CORPORATION
POMPANO BEACH, FLORIDA 33060

SCALE:	DRAWING NUMBER	DRAWN BY: VICKERY
DATE: 4-14-95	95-100	REVISED: 6-5-95
		REVISED: 6-17-96
		REVISED: 11-18-96
		PAGE NUMBER 9 OF 11

REVISED: 8-14-01

REMOVABLE TRACK

CORNER MULLION OPTIONS & END SLAT FASTENING

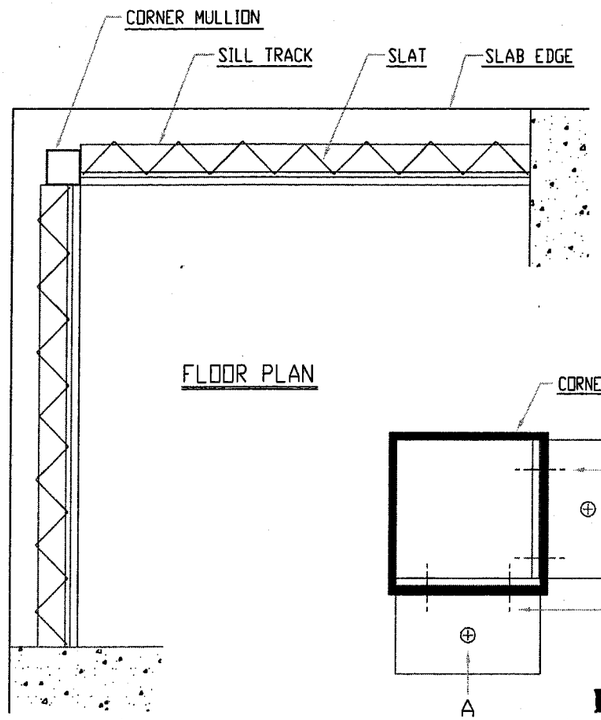

FLOOR PLAN

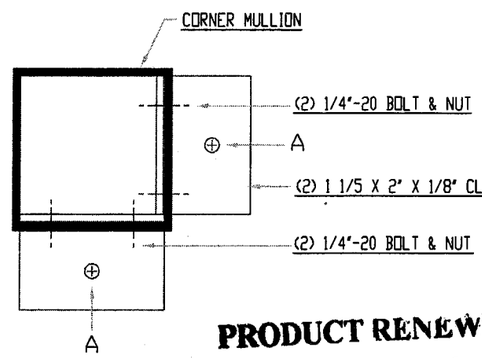

CORNER MULLION

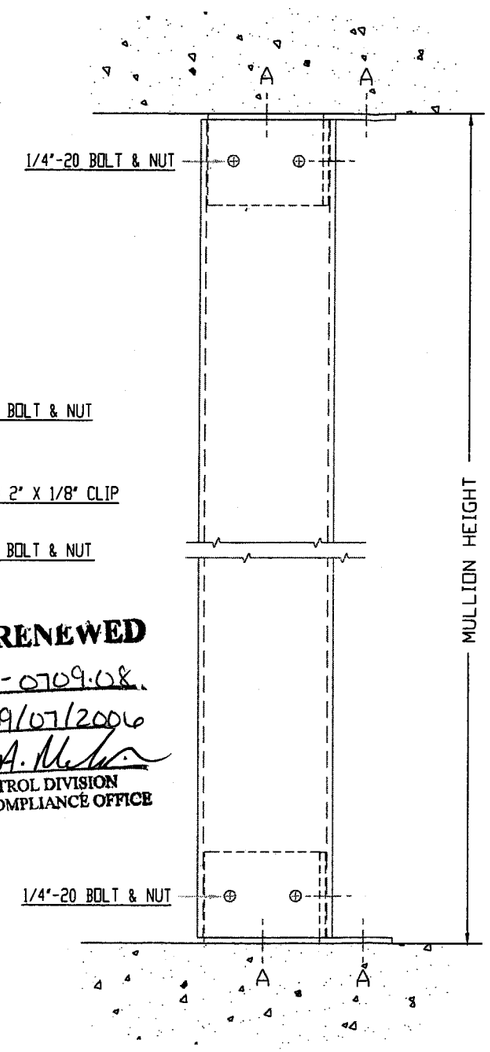

ELEVATION

PRODUCT RENEWED
ACCEPTANCE No. 01-0709.08
EXPIRATION DATE 09/07/2006
By [signature]
PRODUCT CONTROL DIVISION
BUILDING CODE COMPLIANCE OFFICE

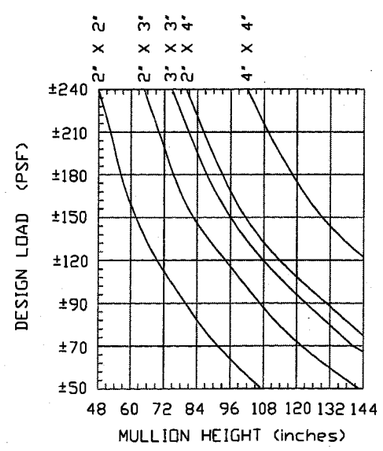

APPROVED FASTENERS

FASTENER "A"

MANUF.	TYPE	DIA.	IMBED.	MAT.
RAWL	TAPPER	.25	1.5	MASONRY
RAWL	CALK-IN	1/4"-20	.875	MASONRY
RAWL	LOK-BOLT	.25	1.125	MASONRY
BOLT & NUT	18-8 S.S. STEEL	1/4"-20	.75	ALUM.
	S.S.SCR	#14	2"	WOOD

EDGE DISTANCE FOR MASONRY AND CONCRETE (12X FASTENER DIA.) PLUS 1/2" FOR STUCCO

1

END SLAT FASTEN TO WALL

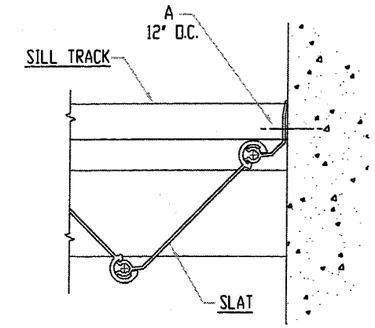

FASTENER "A"

MANUF.	TYPE	DIA.	IMBED.
RAWL	TAPPER	.25	1.5
RAWL	LOK-BOLT	.25	1.125
	WOOD S.S.SCR	#14	2"

2

END SLAT FASTEN TO ANGLE

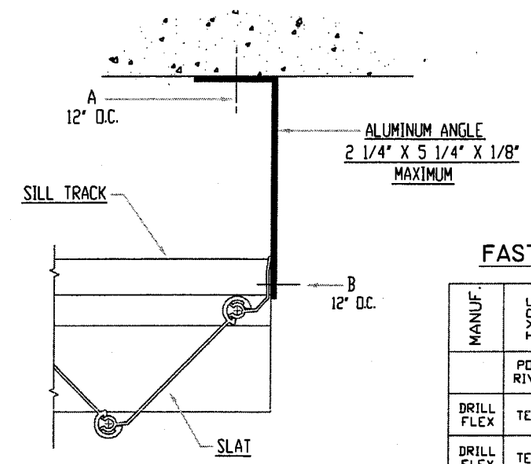

FASTENER "A"

MANUF.	TYPE	DIA.	IMBED.
RAWL	TAPPER	.25	1.5
RAWL	LOK-BOLT	.25	1.125
	WOOD S.S.SCR	#14	2"

FASTENER "B"

MANUF.	TYPE	DIA.	IMBED.
	POP-RIVIT	3/16"	.375
DRILL FLEX	TEKS	#12-14	.5
DRILL FLEX	TEKS	1/4"-14	.5
BOLT & NUT	18-8 S.S. STEEL	1/4"-20	.75

3

END SLAT FASTEN TO MULLION

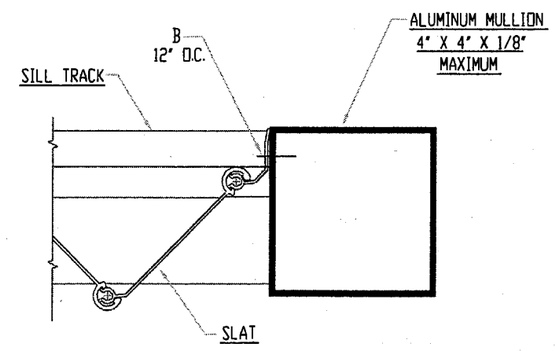

FASTENER "B"

MANUF.	TYPE	DIA.	IMBED.
	POP-RIVIT	3/16"	.375
DRILL FLEX	TEKS	#12-14	.5
DRILL FLEX	TEKS	1/4"-14	.5

American Consulting Engineers Council Member
Supporting Excellence in Engineering

JENKINS & CHARLAND INCORPORATED Consulting Engineers
2559 N.W. 53rd Street
FORT LAUDERDALE, FL 33309
(305) 484-7777

TO THE BEST OF MY KNOWLEDGE AND ABILITY, THE COMPLETED STRUCTURE DEPICTED ON THESE PLANS COMPLIES WITH THE APPLICABLE MINIMUM BUILDING CODES.

PROF. ENGINEER
GENE S. SANDERS
FLA. PE # 26590

SEP 5 2001

BERNARDO SHUTTER CORPORATION
POMPANO BEACH, FLORIDA 33060

SCALE:	DRAWING NUMBER	DRAWN BY: VICKERY
DATE: 4-14-95	95-100	REVISED: 6-5-95
		REVISED: 6-17-96
		REVISED: 11-18-96
		PAGE NUMBER 10 OF 11

REVISED: 8-14-01

CORNER POST OPTIONS & FASTENING SCHEDULE

LOCK ASSEMBLY OPTIONS

LOCK ASSEMBLY

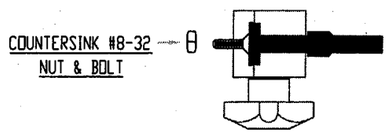

TOP VIEW

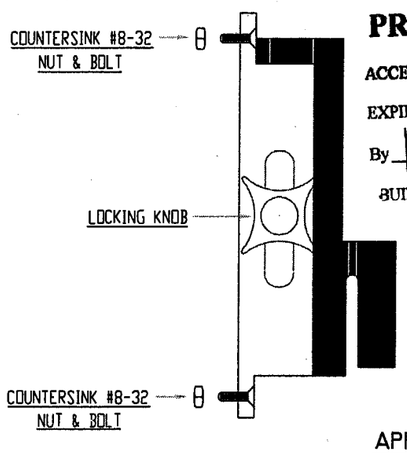

ELEVATION

PRODUCT RENEWED
ACCEPTANCE No. 01-0709-08
EXPIRATION DATE 09/07/2006
By [signature]
PRODUCT CONTROL DIVISION
BUILDING CODE COMPLIANCE OFFICE

LOCK REQUIREMENTS

SLAT HEIGHT	# OF LOCKS REQ'D
0 - 72"	1
73" - 97"	2
98" - 113"	2
114" - 129	3
130" - 144"	3

APPROVED FASTENERS

FASTENER "A"

MANUF.	TYPE	DIA.	IMBED.
RAWL	TAPPER	.25	1.5
RAWL	LOK-BOLT	.25	1.125
	WOOD S.S.SCR	#14	2"

FASTENER "B"

MANUF.	TYPE	DIA.	IMBED.
	POP-RIVIT	3/16"	.375
DRILL FLEX	TEKS	#12-14	.5
DRILL FLEX	TEKS	1/4"-14	.5

1

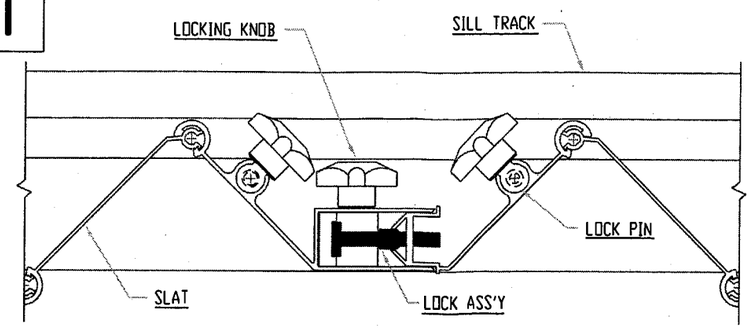

PLAN VIEW
INSIDE CONDITION

2

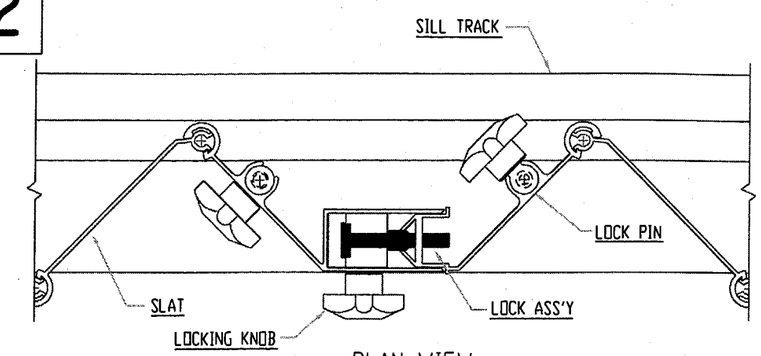

PLAN VIEW
OUTSIDE CONDITION

3

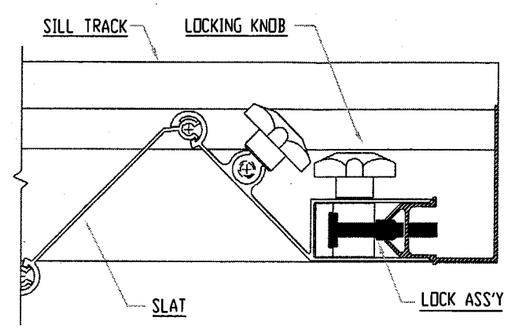

PLAN VIEW
MALE SIDE LOCK INSIDE CONDITION

4

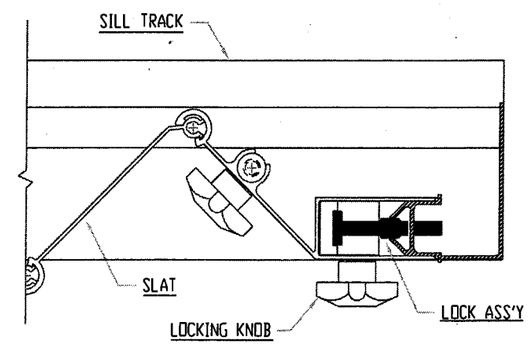

PLAN VIEW
MALE SIDE LOCK OUTSIDE CONDITION

A

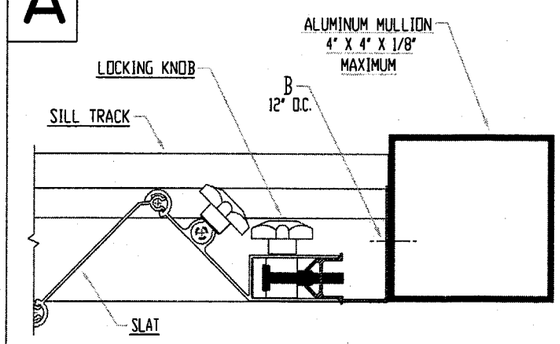

PLAN VIEW
MALE SIDE TO ALUM. MULLION

B

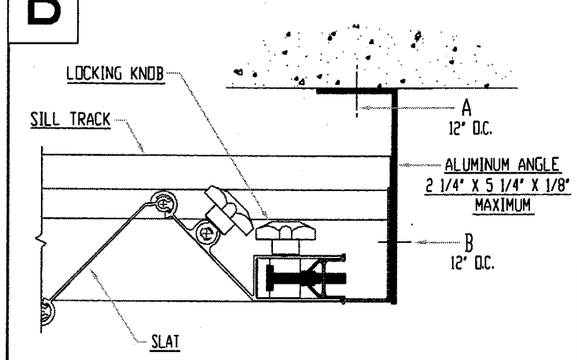

PLAN VIEW
MALE SIDE TO ALUM. ANGLE

C

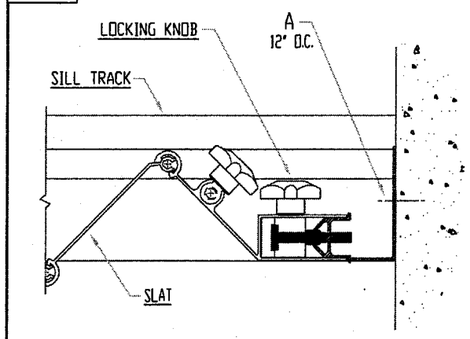

PLAN VIEW
MALE SIDE TO WALL

American Consulting Engineers Council Member
Supporting Excellence in Engineering

JENKINS & CHARLAND INCORPORATED
Consulting Engineers
3559 N.W. 53rd Street
FORT LAUDERDALE, FL 33309
(305) 484-7777

TO THE BEST OF MY KNOWLEDGE AND ABILITY, THE COMPLETED STRUCTURE DEPICTED ON THESE PLANS COMPLIES WITH THE APPLICABLE MINIMUM BUILDING CODES.

PROF. ENGINEER
GENE S. SANDERS
FLA. PE # 26590

SEP 5 2001

BERNARDO SHUTTER CORPORATION POMPANO BEACH, FLORIDA 33060		REVISED: 8-14-01
SCALE:	DRAWING NUMBER	DRAWN BY: VICKERY
DATE: 4-14-95	95-100	REVISED: 6-5-95
LOCK ASSEMBLY		REVISED: 6-17-96
		REVISED: 11-18-96
		PAGE NUMBER 11 OF 11