MIAMI-DADE

MIAMI-DADE COUNTY, FLORIDA
METRO-DADE FLAGLER BUILDING

BUILDING CODE COMPLIANCE OFFICE
METRO-DADE FLAGLER BUILDING
140 WEST FLAGLER STREET, SUITE 1603
MIAMI, FLORIDA 33130-1563
(305) 375-2901 FAX (305) 375-2908

CONTRACTOR LICENSING SECTION
(305) 375-2527 FAX (305) 375-2558

CONTRACTOR ENFORCEMENT DIVISION
(305) 375-2966 FAX (305) 375-2908

PRODUCT CONTROL DIVISION
(305) 375-2902 FAX (305) 372-6339

PRODUCT CONTROL NOTICE OF ACCEPTANCE

PGT Industries
1070 Technology Drive
Nokomis ,FL 34275

Your application for Notice of Acceptance (NOA) of:
Series"ATW-400" Aluminum Awning Window (5-Vents)
under Chapter 8 of the Code of Miami-Dade County governing the use of Alternate Materials and Types of Construction, and completely described herein, has been recommended for acceptance by the Miami-Dade County Building Code Compliance Office (BCCO) under the conditions specified herein.

This NOA shall not be valid after the expiration date stated below. BCCO reserves the right to secure this product or material at any time from a jobsite or manufacturer's plant for quality control testing. If this product or material fails to perform in the approved manner, BCCO may revoke, modify, or suspend the use of such product or material immediately. BCCO reserves the right to revoke this approval, if it is determined by BCCO that this product or material fails to meet the requirements of the South Florida Building Code.

The expense of such testing will be incurred by the manufacturer.

ACCEPTANCE NO.: 01-0712.04
EXPIRES: 12/20/2006

Raul Rodriguez
Chief Product Control Division

THIS IS THE COVERSHEET, SEE ADDITIONAL PAGES FOR SPECIFIC AND GENERAL CONDITIONS
BUILDING CODE & PRODUCT REVIEW COMMITTEE

This application for Product Approval has been reviewed by the BCCO and approved by the Building Code and Product Review Committee to be used in Miami-Dade County, Florida under the conditions set forth above.

Francisco J. Quintana, R.A.
Director
Miami-Dade County
Building Code Compliance Office

APPROVED: 12/20/2001

PGT Industries

ACCEPTANCE No. : 01-0712.04

APPROVED : December 20, 2001

EXPIRES : December 20, 2006

NOTICE OF ACCEPTANCE: SPECIFIC CONDITIONS

1. SCOPE

1.1 This approves an aluminum awning window, as described in Section 2 of this Notice of Acceptance, designed to comply with the South Florida Building Code, 1994 Edition for Miami-Dade County, for the locations where the pressure requirements, as determined by SFBC Chapter 23, do not exceed the Design Pressure Rating values indicated in the approved drawings.

2. PRODUCT DESCRIPTION

2.1 The Series **"ATW-400" Aluminum Awning Window** (5-Vents max) and its components shall be constructed in strict compliance with the following document: Drawing No. **446**, Sheets 1 through 5 of 5, titled "Std Vent Alum Awning Windows", prepared by manufacturer dated 06/19/01 and last revised on 10-17-01, signed and sealed by Robert L. Clark, P.E. , bearing the Miami-Dade County Product Control Approval stamp with the Notice of Acceptance number and approval date by the Miami-Dade County Product Control Division. These documents shall hereinafter be referred to as the approved drawings.

3. LIMITATIONS

3.1 This approval applies to single unit applications only, as shown in approved drawings.

4. INSTALLATION

4.1 The aluminum awning window and its components shall be installed in strict compliance with the approved drawings.

4.2 Hurricane protection system (shutters): the installation of this unit **will require** a hurricane protection system.

5. LABELING

5.1 Each unit shall bear a permanent label with the manufacturer's name or logo, city, state and following statement: "Miami-Dade County Product Control Approved".

6. BUILDING PERMIT REQUIREMENTS

6.1 Application for building permit shall be accompanied by copies of the following:

6.1.1 This Notice of Acceptance.

6.1.2 Duplicate copies of the approved drawings, as identified in Section 2 of this Notice of Acceptance, clearly marked to show the components selected for the proposed installation.

6.1.3 Any other documents required by the Building Official or the South Florida Building Code (SFBC) in order to properly evaluate the installation of this system.

Ishaq I. Chanda

Ishaq I. chanda, P.E., Product Control Examiner
Product Control Division

PGT Industries

ACCEPTANCE No. : 01-0712.04

APPROVED : December 20, 2001

EXPIRES : December 20, 2006

NOTICE OF ACCEPTANCE: STANDARD CONDITIONS

1 Renewal of this Acceptance (approval) shall be considered after a renewal application has been filed and the original submitted documents, including test-supporting data, engineering documents, are no older than eight (8) years.

2. Any and all approved products shall be permanently labeled with the manufacturer's name, city, state, and the following statement: "Miami-Dade County Product Control Approval", or as specifically stated in the specific conditions of this Acceptance.

3. Renewals of Acceptance will not be considered if:
   a. There has been a change in the South Florida Building Code affecting the evaluation of this product and the product is not in compliance with the code changes.
   b. The product is no longer the same product (identical) as the one originally approved.
   c. If the Acceptance holder has not complied with all the requirements of this acceptance, including the correct installation of the product.
   d. The engineer who originally prepared, signed and sealed the required documentation initially submitted, is no longer practicing the engineering profession.

4. Any revision or change in the materials, use, and/or manufacture of the product or process shall automatically be cause for termination of this Acceptance, unless prior written approval has been requested (through the filing of a revision application with appropriate fee) and granted by this office.

5. Any of the following shall also be grounds for removal of this Acceptance:
   a. Unsatisfactory performance of this product or process.
   b. Misuse of this Acceptance as an endorsement of any product, for sales, advertising or any other purposes.

6. The Notice of Acceptance number preceded by the words Miami-Dade County, Florida, and followed by the expiration date may be displayed in advertising literature. If any portion of the Notice of Acceptance is displayed, then it shall be done in its entirety.

7. A copy of this Acceptance as well as approved drawings and other documents, where it applies, shall be provided to the user by the manufacturer or its distributors and shall be available for inspection at the job site at all time. The engineer needs not reseal the copies.

8. Failure to comply with any section of this Acceptance shall be cause for termination and removal of Acceptance.

9. This Notice of Acceptance consists of pages 1, 2 and this last page 3.

END OF THIS ACCEPTANCE

Ishaq I. Chanda

Ishaq I. chanda, P.E., Product Control Examiner
Product Control Division

PGT Industries

ACCEPTANCE No. : 01-0712.04

APPROVED : December 20, 2001

EXPIRES : December 20, 2006

NOTICE OF ACCEPTANCE: EVIDENCE SUBMITTED
(For File ONLY. Not part of NOA.)

A. DRAWINGS

1. Manufacturer's die drawings and sections.
2. Drawing No. **446**, Sheets 1 through 5 of 5, titled "Std Vent Alum Awning Windows", prepared by manufacturer dated 06/19/01 and last revised on 10-17-01, signed and sealed by Robert L. Clark, P.E.

B. TESTS

1. Test reports on 1) Air Infiltration Test, per PA 202-94
   2) Uniform Static Air Pressure Test, Loading per PA 202-94
   3) Water Resistance Test, per PA 202-94
   4) Forced Entry Test, per SFBC 3603.2 (b) and PA 202-94

   along with marked-up drawings and installation diagram of aluminum awning windows, issued by Fenestration Testing Laboratory, Inc., Test Report No. **FTL-3047** dated June 06,2001, reviewed and signed and sealed by Luis Figueredo, P.E.

C. CALCULATIONS

1. Comparative Analysis and Anchor & glazing Calculations, prepared by PGT Industries, dated 07/06/01, and revised on 11/12/01, signed and sealed by Robert L. Clark, P.E.

D. MATERIAL CERTIFICATIONS

1. None

E. STATEMENTS

1. Statement letter of conformance and no financial interest, dated July 06, 2001 signed and sealed by Robert L. Clark, P.E.
2. Laboratory compliance letter for Test Report No. **FTL-3047** issued by Fenestration Testing laboratory, dated June 06,2001, signed & sealed by Luis Figueredo, P.E.

F. OTHER

1. Testing proposal dated January 09, 2001 approved by BCCO.

Ishaq I. Chanda

Ishaq I. chanda, P.E., Product Control Examiner
Product Control Division

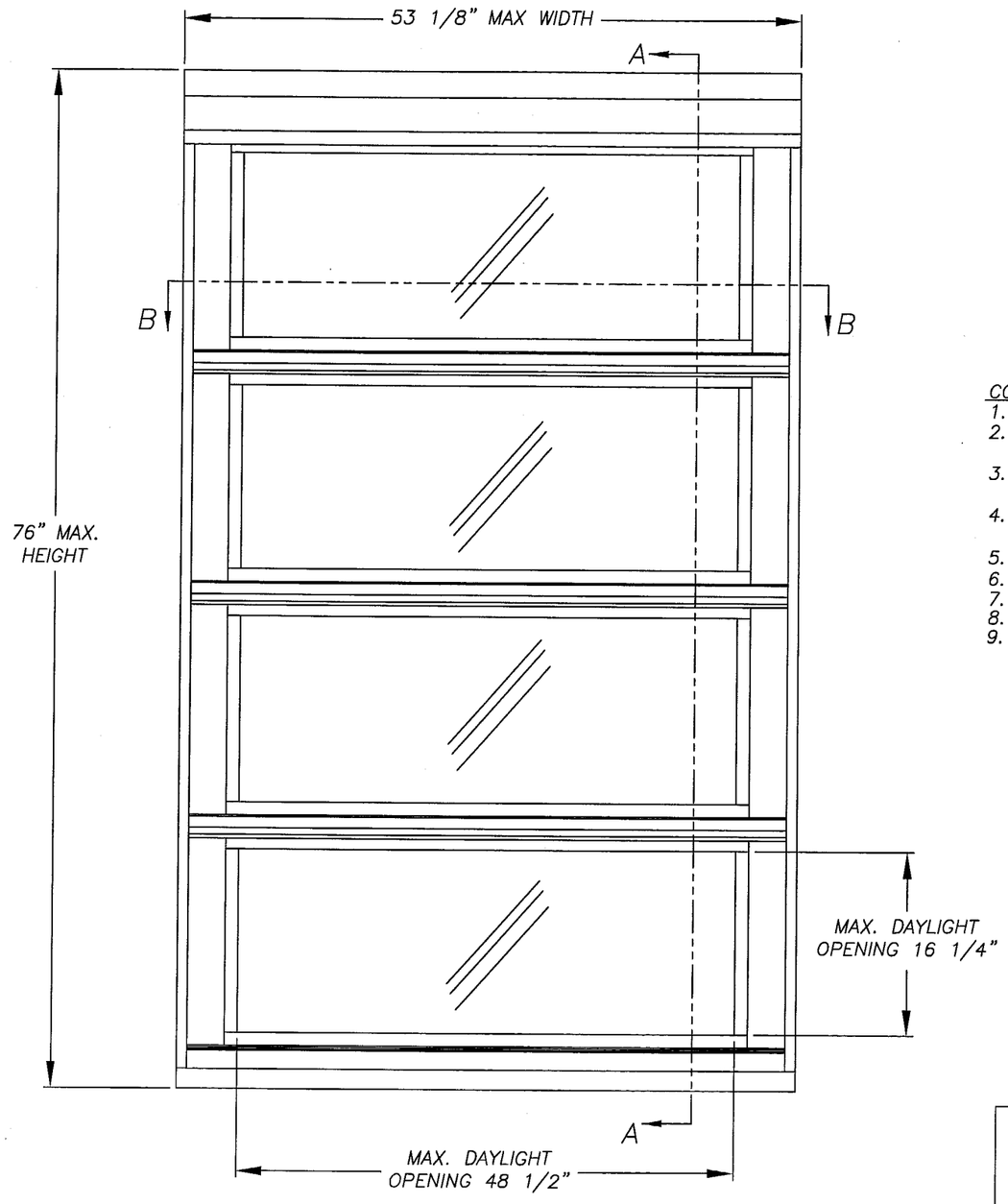

NON-IMPACT WINDOWS

1.) CONFIGURATIONS: XX, XXX, XXXX, XXXXX (4 VENT SHOWN)
2.) MIAMI-DADE COUNTY APPROVED SHUTTERS ARE REQUIRED AT ALL INSTALLATIONS
3.) SEE SHEET 2 OF 5 FOR SECTION DETAILS
4.) PRESSURES UNDER 40 P.S.F. NOT APPLICALBE IN MIAMI-DADE COUNTY

COMPARATIVE ANALYSIS FOR: 3/16" ANNEALED GLASS
TEST REPORT: FTL-3047 A3

MINIMUM QUANTITY OF LITES:

	2	3	4	4	5
	HEIGHTS				
WIDTHS	38.375 (3)	50.625 (4)	63.000 (5)	76.000 (5)	76.000 (6)
19.125 (2)	-32.3	-39.7	-44.3	-30.0	-46.6
	32.3	36.7	36.7	30.0	36.7
32.000 (3)	-32.3	-39.7	-44.3	-30.0	-46.6
	32.3	36.7	36.7	30.0	36.7
40.000 (3)	-32.3	-39.7	-44.3	-30.0	-46.6
	32.3	36.7	36.7	30.0	36.7
44.000 (3)	-32.3	-39.7	-44.0	-30.0	-44.9
	32.3	36.7	36.7	30.0	36.7
48.000 (3)	-32.3	-37.9	-39.6	-30.0	-40.4
	32.3	36.7	36.7	30.0	36.7
53.125 (3)	-30.9	-33.6	-35.1	-30.0	-30.0
	30.9	33.6	35.1	30.0	30.0

COMPARATIVE ANALYSIS FOR: DSB ANNEALED GLASS
TEST REPORT: FTL-3047 A2

MINIMUM QUANTITY OF LITES:

	2	3	4	4	5
	HEIGHTS				
WIDTHS	38.375 (3)	50.625 (4)	63.000 (5)	76.000 (5)	76.000 (6)
19.125 (2)	-32.3	-39.7	-44.3	-30.0	-46.6
	32.3	36.7	36.7	30.0	36.7
32.000 (3)	-32.3	-39.7	-44.3	-30.0	-46.6
	32.3	36.7	36.7	30.0	36.7
40.000 (3)	-32.3	-39.7	-44.3	-30.0	-46.6
	32.3	36.7	36.7	30.0	36.7
44.000 (3)	-32.3	-39.7	-44.0	-30.0	-44.9
	32.3	36.7	36.7	30.0	36.7
48.000 (3)	-32.3	-37.9	-39.6	-30.0	-40.4
	32.3	36.7	36.7	30.0	36.7
53.125 (3)	-30.9	-33.6	-35.1	-30.0	-30.0
	30.9	33.6	35.1	30.0	30.0

COMPARATIVE ANALYSIS FOR: SSB ANNEALED GLASS
TEST REPORT: FTL-3047 A1

MINIMUM QUANTITY OF LITES:

	2	3	4	4	5
	HEIGHTS				
WIDTHS	38.375 (3)	50.625 (4)	63.000 (5)	76.000 (5)	76.000 (6)
19.125 (2)	-26.9	-33.1	-36.9	-25.0	-38.8
	26.9	33.1	36.7	25.0	36.7
32.000 (3)	-26.9	-33.1	-36.9	-25.0	-38.8
	26.9	33.1	36.7	25.0	36.7
40.000 (3)	-26.9	-33.1	-36.9	-25.0	-38.8
	26.9	33.1	36.7	25.0	36.7
44.000 (3)	-26.9	-33.1	-35.4	-25.0	-36.8
	26.9	33.1	35.4	25.0	36.7
48.000 (3)	-26.9	-31.1	-33.0	-25.0	-33.7
	26.9	31.1	33.0	25.0	33.7
53.125 (3)	-25.2	-28.0	-29.3	-24.8	-25.0
	25.2	28.0	29.3	24.8	25.0

COMPARATIVE ANALYSIS NOTES:

1. NUMBERS IN ( ) PARENTHESES ARE QUANTITY OF ANCHORS PER SIDE.
2. NEGATIVE DESIGN LOADS BASED ON COMPARATIVE ANALYSIS & GLASS TABLE ASTM E1300.
3. POSITIVE DESIGN LOADS BASED ON COMPARATIVE ANALYSIS & WATER TEST PRESSURE.
4. NUMBERS ARE FOR #10 SCREWS OR 3/16" TAPCONS. (#12 SCREWS MAY BE SUBSTITUTED)
5. ANCHORS 4" MAX. FROM CORNERS AT HEAD.
6. ANCHORS 4 3/4" MAX. FROM CORNERS AT JAMBS.
7. ANCHOR SPACING – MAX. 22 1/2" AT HEAD.
8. ANCHOR SPACING – MAX. 16 1/2" AT JAMBS.
9. MINIMUM HEIGHT FOR STANDARD VENT WINDOWS IS 38 3/8".

GLASS THICKNESS		
ITEM	DIM 'A'	GLASS TYPE
32	3/32"	SSB ANNEALED
33	1/8"	DSB ANNEALED
35	3/16"	ANNEALED

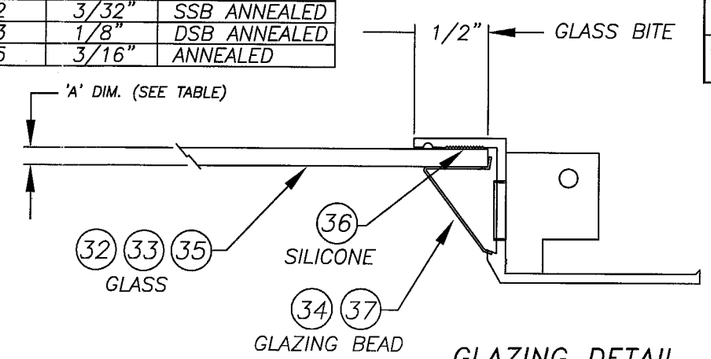

GLAZING DETAIL

APPROVED AS COMPLYING WITH THE SOUTH FLORIDA BUILDING CODE
DATE DECEMBER 20, 2001
BY Tshag I. Chanda
PRODUCT CONTROL DIVISION
BUILDING CODE COMPLIANCE OFFICE
ACCEPTANCE NO. 01-0712.04

11/27/01

Robert L. Clark, P.E.
PE #39712
Structural

PGT INDUSTRIES

1070 TECHNOLOGY DRIVE
NOKOMIS, FL 34275

P.O. BOX 1529
NOKOMIS, FL 34274

Revsd By:	Date:	Revisions:
F.K.	10/17/01	PER LTR 10/12
Revsd By: F.K.	Date: 9/19/01	Revisions: REDRAWN
Drawn By: F.K.	Date: 6/19/01	

Description: 53 1/8" WIDE X 76" HIGH

Title: STD. VENT ALUM. AWNING WINDOWS

Series/Model:	Scale:	Sheet:	Drawing No.	Rev:
ATW-400	NTS	1 of 5	446	B

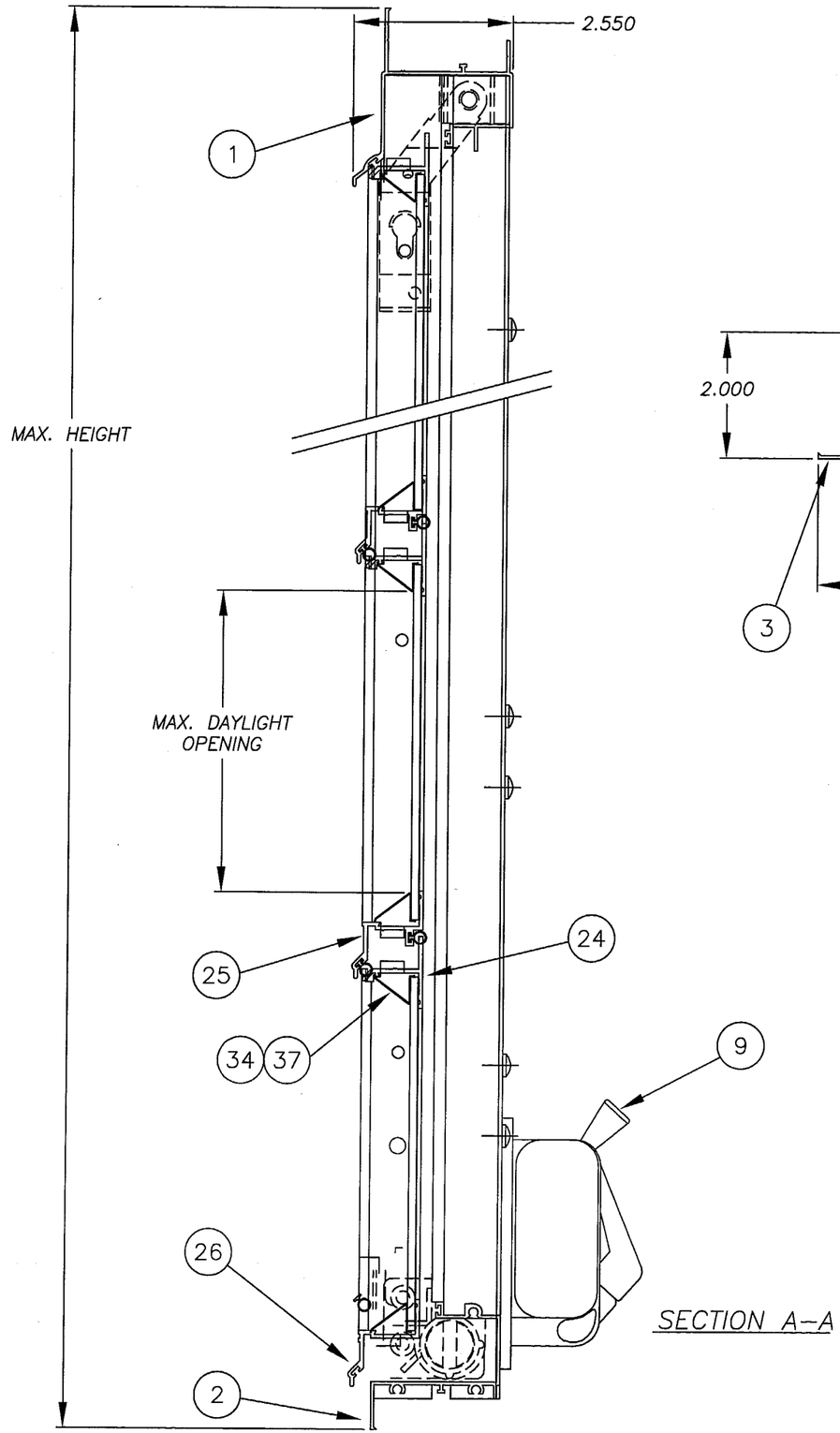

SECTION A–A

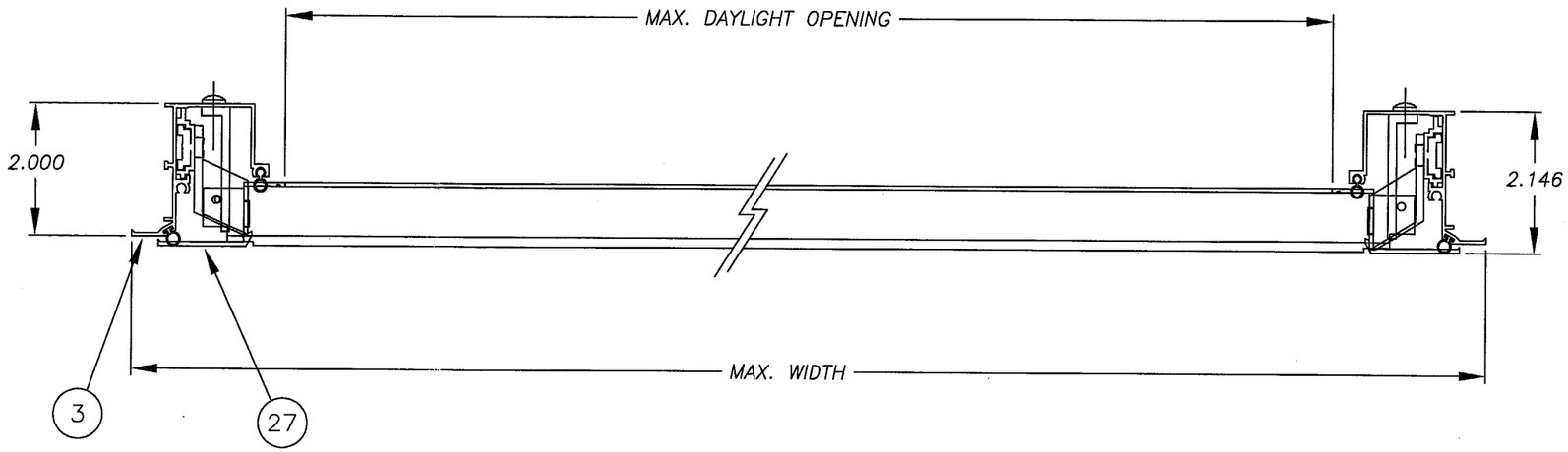

SECTION B–B

NON–IMPACT WINDOWS

1.) CONFIGURATIONS: XX, XXX, XXXX, XXXXX
2.) REFERENCE TEST REPORT: FTL–3047

APPROVED AS COMPLYING WITH THE SOUTH FLORIDA BUILDING CODE
DATE Dec 20, 2001
BY Ishaq I. Chanda
PRODUCT CONTROL DIVISION
BUILDING CODE COMPLIANCE OFFICE
ACCEPTANCE NO. 01-0712.04

Robert L. Clark, P.E.
PE #39712
Structural
11/27/01

PGT INDUSTRIES
1070 TECHNOLOGY DRIVE
NOKOMIS, FL 34275
P.O. BOX 1529
NOKOMIS, FL 34274

Revsd By:	Date:	Revisions:
F.K.	10/17/01	PER LTR 10/12
F.K.	9/19/01	REDRAWN
Drawn By: F.K.	Date: 6/19/01	

Description: SECTIONS

Title: STD. VENT ALUM. AWNING WINDOWS

Series/Model:	Scale:	Sheet:	Drawing No.	Rev:
ATW–400	NTS	2 of 5	446	B

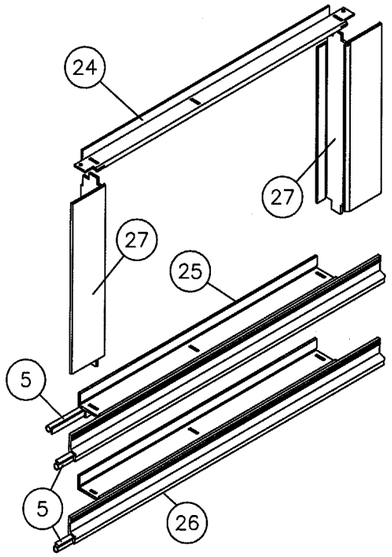

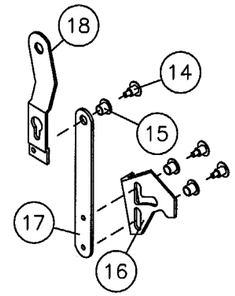

HINGE ASS'Y.

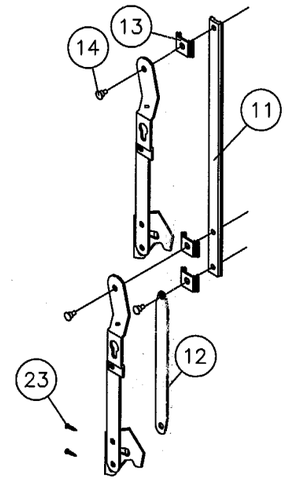

HARNESS ASS'Y.

NOTE:
ITEM #23 IS USED TO INSTALL HARNESS ASSEMBLY TO FRAME JAMB.

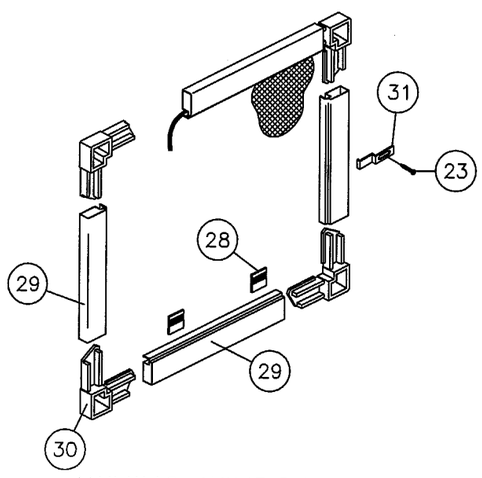

AWNING WINDOW VENT & SCREEN ASS'Y.

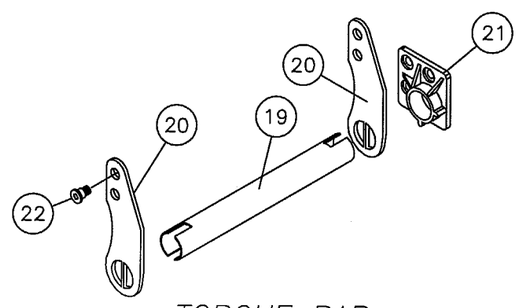

TORQUE BAR ASS'Y.

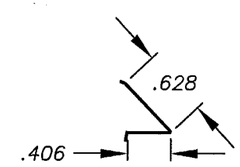

3/16 GLAZING BEAD
MAT'L: ALUM.
DWG #2719
37

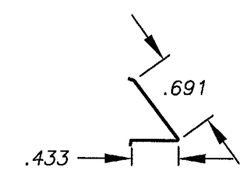

SSB/DSB GLAZING BEAD
MAT'L: ALUM.
DWG #2712
34

BILL OF MATERIAL

MK.	DESCRIPTION	DWG #	PGT #	VENDOR	VENDOR #
1	FRAME HEAD	402	66391	6063–T6	42100
2	FRAME SILL	403	66392	6063–T6	42039
3	FRAME JAMB	404	66393	6063–T6	42040
4	#8 x 3/4 QUAD PN. SMS	1177	70834	SPENCER OR =	
5	WSTP. – VINYL BULB (HEAD/VENT)	1003	66601	TEAM PLASTICS	466–1
6	WSTP. – VINYL BULB (JAMB)	1004	66606	TEAM PLASTICS	466–6
7	WSTP. – VINYL BULB (TORQUE BAR)	1005	66605	TEAM PLASTICS	466–5
8	#6 x 5/16 PH. PN. SMS		7PPBA	FASTEC	
9	OPERATOR ASSY.		7OPR	TRUTH HARDWARE	
10	#10–24 x .500 PH. PN SMS		7PPFF	FASTEC	2AW00
11	HARNESS SLIDE BAR	420	64124	6063–T5	42177
12	OPERATOR LINK	415–1	AWLONGLINK	5052 H34	X
13	SLIDE BAR GUIDE	418	42003	PGT	
14	HARNESS ASS'Y RIVET	422	7VT33M	5052/5056 H–32	625EG
15	CAM BUSHING	419	42001	PGT	
16	CAM LOCK LEFT/RIGHT	413–1	AWCAMLOCK	5052 H34	
17	VENT LINK	415–2	AWSHORTLINK	5052 H34	
18	VENT HANGER RIGHT/LEFT	412–1	AWVENTHANGER	6063–T5	
19	TORQUE BAR	416	6416M	6005–T6	45264
20	TORQUE BAR ARM	414–1	AWTORQUEARM	6063–T5	
21	TORQUE BAR BUSHING	417	42002	GLASS FILLED NYLON	
22	TORQUE BAR SHOULDER BOLT	X	X	X	
23	#10 x 1/4 PH. PN. SMS	1157	7PPBB	SPENCER OR =	
24	SASH TOP RAIL	405	642003	6063–T6	45152
25	SASH BOTTOM RAIL, UPPER SASH	406	642099	6063–T6	45150
26	SASH BOTTOM RAIL, LOWER SASH	408	642098	6063–T6	45149
27	SASH SIDE RAIL	429	642101	6063–T6	45151
28	SCREEN PULL TABS	1278	70409	ELASTOMETRIC PVC	TP–482
29	SCREEN FRAME	1014	61011	3105 H14	1011
30	SCREEN CORNER KEY	1013	41903	POLYPROPYLENE	X
31	SCREEN STRETCH CLIP	424	7VT65	6063–T5	VT–65
32	SSB GLASS		X	X	X
33	DSB GLASS		X	X	X
34	SSB/DSB GLAZING BEAD	2712	65200	X	X
35	3/16" ANNEALED GLASS		X	X	X
36	GE#2801 CLEAR COLORED SILICONE				
37	3/16" GLAZING BEAD	2719	65016	X	X

NON–IMPACT WINDOWS

1.) CONFIGURATIONS: XX, XXX, XXXX, XXXXX
2.) REFERENCE TEST REPORT: FTL–3047

Rd Clark 10/22/01

Robert L. Clark, P.E.
PE #39712
Structural

PGT INDUSTRIES

1070 TECHNOLOGY DRIVE
NOKOMIS, FL 34275

P.O. BOX 1529
NOKOMIS, FL 34274

Revsd By:	Date:	Revisions:
F.K.	10/17/01	PER LTR 10/12
F.K.	9/19/01	REDRAWN
Drawn By: F.K.	Date: 6/19/01	

APPROVED AS COMPLYING WITH THE SOUTH FLORIDA BUILDING CODE
DATE DEC 20 2001
BY Ishay I. Chanda
PRODUCT CONTROL DIVISION
BUILDING CODE COMPLIANCE OFFICE
ACCEPTANCE NO. 01-0712.04

Description: EXPLODED VIEWS & PARTS LIST

Title: STD. VENT ALUM. AWNING WINDOWS

Series/Model:	Scale:	Sheet:	Drawing No.	Rev:
ATW–400	NTS	3 of 5	446	B

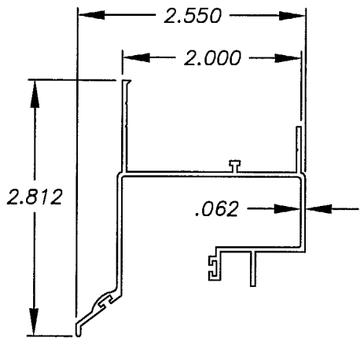

(1) FRAME HEAD
MAT'L: 6063-T6
DWG #402

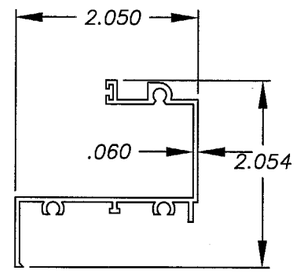

(2) FRAME SILL
MAT'L: 6063-T6
DWG #403

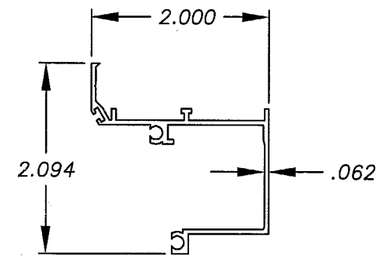

(3) FRAME JAMB
MAT'L: 6063-T6
DWG #404

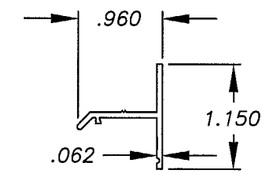

(24) SASH TOP RAIL
MAT'L: 6063-T6
DWG #405

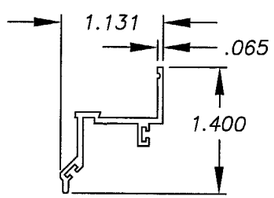

(25) SASH BOTT. RAIL
MAT'L: 6063-T6
DWG #406

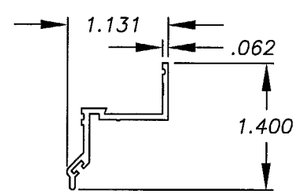

(26) BOTT. SASH BOTT. RAIL
MAT'L: 6063-T6
DWG #408

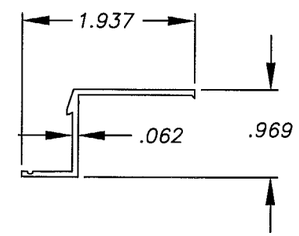

(27) SASH SIDE RAIL
MAT'L: 6063-T6
DWG #429

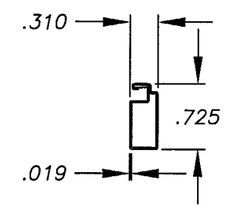

(29) SCREEN FRAME
MAT'L: 3105 H14
DWG #1014

APPROVED AS COMPLYING WITH THE SOUTH FLORIDA BUILDING CODE
DATE DEC 20, 2001
BY Ishaq I. Chanda
PRODUCT CONTROL DIVISION
BUILDING CODE COMPLIANCE OFFICE
ACCEPTANCE NO. 01-0712.04

NON-IMPACT WINDOWS
1.) CONFIGURATIONS: XX, XXX, XXXX, XXXXX
2.) REFERENCE TEST REPORT: FTL-3047

RL Clark 12/27/01

Robert L. Clark, P.E.
PE #39712
Structural

PGT INDUSTRIES

1070 TECHNOLOGY DRIVE
NOKOMIS, FL 34275

P.O. BOX 1529
NOKOMIS, FL 34274

Revsd By:	Date:	Revisions:
F.K.	10/17/01	PER LTR 10/12
F.K.	9/19/01	REDRAWN
Drawn By: F.K.	Date: 6/19/01	

Description: EXTRUSION PROFILES

Title: STD. VENT ALUM. AWNING WINDOWS

Series/Model:	Scale:	Sheet:	Drawing No.	Rev:
ATW-400	NTS	4 of 5	446	B

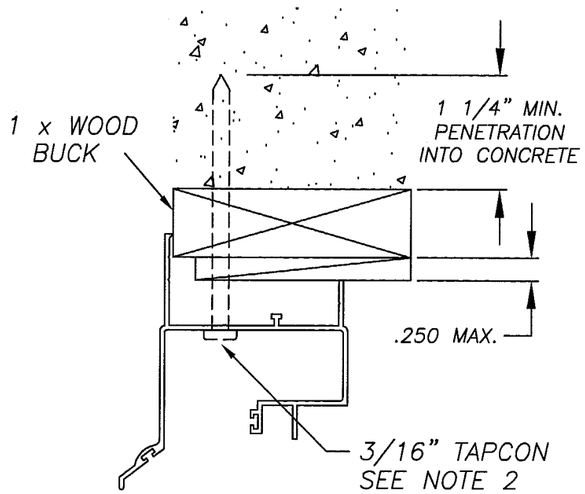

TYP. HEAD

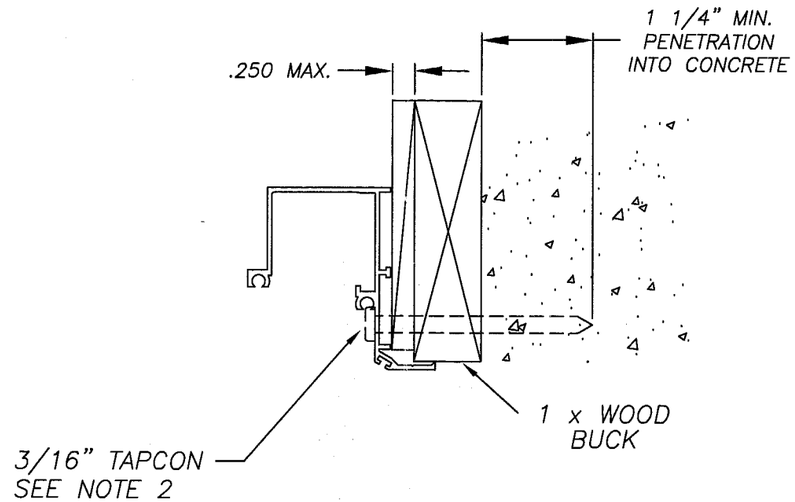

TYP. JAMB

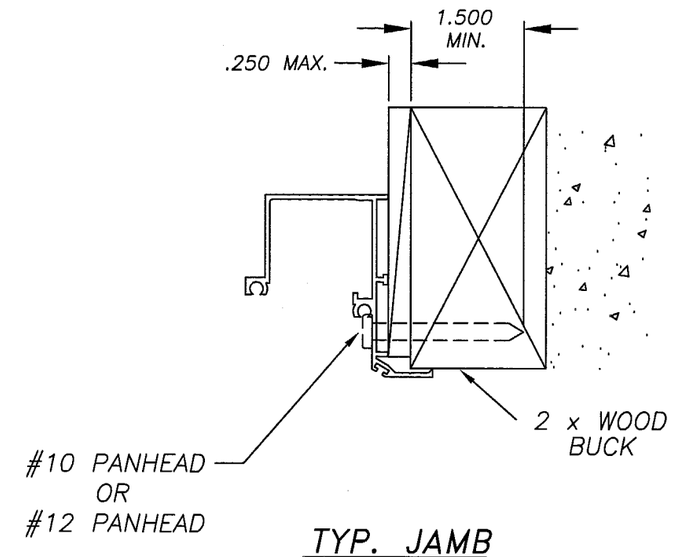

TYP. JAMB

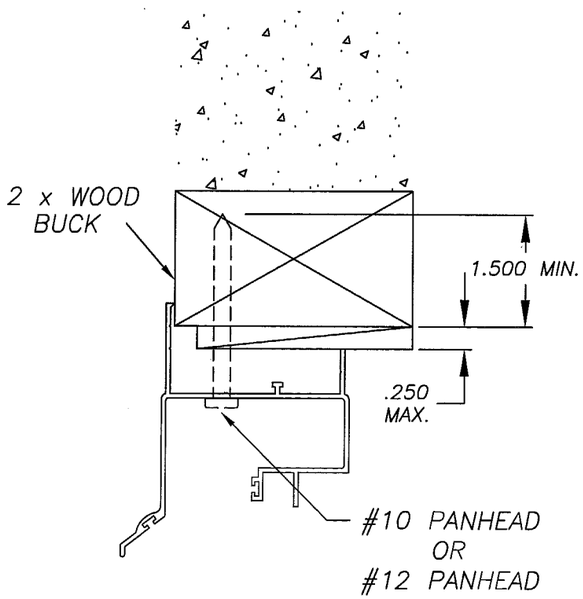

TYP. HEAD

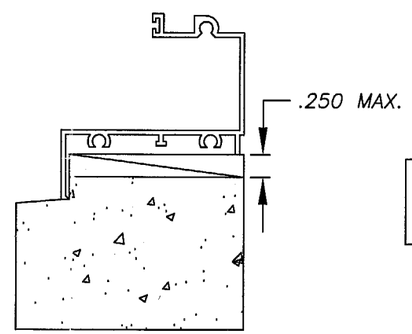

TYP. SILL

NOTE: ANCHORS NOT REQUIRED IN SILL

NON-IMPACT WINDOWS

1.) CONFIGURATIONS: XX, XXX, XXXX, XXXXX
2.) USE MIAMI-DADE COUNTY APPROVED TAPCONS
3.) REFERENCE TEST REPORT: FTL-3047

APPROVED AS COMPLYING WITH THE SOUTH FLORIDA BUILDING CODE
DATE DECEMBER 20, 2001
BY Ishaq I. Chanda
PRODUCT CONTROL DIVISION
BUILDING CODE COMPLIANCE OFFICE
ACCEPTANCE NO. 01-0712.04

Robert L. Clark, P.E.
PE #39712
Structural

PGT INDUSTRIES
1070 TECHNOLOGY DRIVE
NOKOMIS, FL 34275
P.O. BOX 1529
NOKOMIS, FL 34274

Revsd By:	Date:	Revisions:
F.K.	10/17/01	PER LTR 10/12
F.K.	9/19/01	REDRAWN
F.K.	6/19/01	

Description: ANCHORAGE DETAILS

Title: STD. VENT ALUM. AWNING WINDOWS

Series/Model:	Scale:	Sheet:	Drawing No.	Rev:
ATW-400	NTS	5 of 5	446	B