MIAMI-DADE

MIAMI-DADE COUNTY, FLORIDA
METRO-DADE FLAGLER BUILDING

BUILDING CODE COMPLIANCE OFFICE
METRO-DADE FLAGLER BUILDING
140 WEST FLAGLER STREET, SUITE 1603
MIAMI, FLORIDA 33130-1563
(305) 375-2901 FAX (305) 375-2908

CONTRACTOR LICENSING SECTION
(305) 375-2527 FAX (305) 375-2558

CONTRACTOR ENFORCEMENT DIVISION
(305) 375-2966 FAX (305) 375-2908

PRODUCT CONTROL DIVISION
(305) 375-2902 FAX (305) 372-6339

PRODUCT CONTROL NOTICE OF ACCEPTANCE

Florida Lumber Co.
2431 N.W. 20th St.
Miami ,FL 33142

Your application for Notice of Acceptance (NOA) of:
Fixed Wood Door Panel to be used as Sidelite or Transom
under Chapter 8 of the Code of Miami-Dade County governing the use of Alternate Materials and Types of Construction, and completely described herein, has been recommended for acceptance by the Miami-Dade County Building Code Compliance Office (BCCO) under the conditions specified herein.

This NOA shall not be valid after the expiration date stated below. BCCO reserves the right to secure this product or material at any time from a jobsite or manufacturer's plant for quality control testing. If this product or material fails to perform in the approved manner, BCCO may revoke, modify, or suspend the use of such product or material immediately. BCCO reserves the right to revoke this approval, if it is determined by BCCO that this product or material fails to meet the requirements of the South Florida Building Code.

The expense of such testing will be incurred by the manufacturer.

ACCEPTANCE NO.: 01-0718.03
EXPIRES: 09/21/2006

Raul Rodriguez
Chief Product Control Division

THIS IS THE COVERSHEET, SEE ADDITIONAL PAGES FOR SPECIFIC AND GENERAL CONDITIONS
BUILDING CODE & PRODUCT REVIEW COMMITTEE

This application for Product Approval has been reviewed by the BCCO and approved by the Building Code and Product Review Committee to be used in Miami-Dade County, Florida under the conditions set forth above.

Francisco J. Quintana, R.A.
Director
Miami-Dade County
Building Code Compliance Office

APPROVED: 09/05/2001

Florida Lumber Co.

ACCEPTANCE No.: 01-0718.03

APPROVED : SEP 0 5 2001

EXPIRES : September 21, 2006

NOTICE OF ACCEPTANCE: SPECIFIC CONDITIONS

1. SCOPE

1.1 This **renews** the Notice of Acceptance No. **98-0317.07**, which was issued on September 21, 1998. It approves a wood door, as described in Section 2 of this Notice of Acceptance, designed to comply with the South Florida Building Code (SFBC), 1994 Edition for Miami-Dade County, for the locations where the pressure requirements, as determined by SFBC Chapter 23, do not exceed the Design Pressure Rating values indicated in the approved drawings.

2. PRODUCT DESCRIPTION

2.1 The **Fixed Wood Door Panels to be used as Sidelite or Transom** and its components shall be constructed in strict compliance with the following documents: Drawing No **99005**, Sheets 1 of 1, titled "FBMA Series Fixed Wood Transom and Sidelite," prepared by manufacturer, dated 12/6/99, bearing the Miami-Dade County Product Control approval stamp with the Notice of Acceptance number and approval date by the Miami-Dade County Product Control Division. These documents shall hereinafter be referred to as the approved drawings.

3. LIMITATIONS

3.1 This approval applies to single unit applications only, as shown in approved drawings.

4. INSTALLATION

4.1 The wood door and its components shall be installed in strict compliance with the approved drawings.

4.2 Hurricane protection system (shutters): the installation of these units **will require** a hurricane protection system

5. LABELING

5.1 Each unit shall bear a permanent label with the manufacturer's name or logo, city, state and following statement: "Miami-Dade County Product Control Approved".

6. BUILDING PERMIT REQUIREMENTS

6.1 Application for building permit shall be accompanied by copies of the following:

6.1.1 This Notice of Acceptance

6.1.2 Duplicate copies of the approved drawings, as identified in Section 2 of this Notice of Acceptance, clearly marked to show the components selected for the proposed installation.

6.1.3 Any other documents required by the Building Official or the South Florida Building Code (SFBC) in order to properly evaluate the installation of this system.

Manuel Perez

Manuel Perez, P.E. Product Control Examiner
Product Control Division

Florida Lumber Co.

ACCEPTANCE No.: **01-0718.03**

APPROVED : SEP 0 5 2001

EXPIRES : **September 21, 2006**

NOTICE OF ACCEPTANCE: STANDARD CONDITIONS

1. Renewal of this Acceptance (approval) shall be considered after a renewal application has been filed and the original submitted documentation, including test supporting data, engineering documents, are no older than eight (8) years.

2. Any and all approved products shall be permanently labeled with the manufacturer's name, city, state, and the following statement: "Miami-Dade County Product Control Approved", or as specifically stated in the specific conditions of this Acceptance.

3. Renewals of Acceptance will not be considered if:
   a) There has been a change in the South Florida Building Code affecting the evaluation of this product and the product is not in compliance with the code changes;
   b) The product is no longer the same product (identical) as the one originally approved;
   c) If the Acceptance holder has not complied with all the requirements of this acceptance, including the correct installation of the product;
   d) The engineer who originally prepared, signed and sealed the required documentation initially submitted is no longer practicing the engineering profession.

4. Any revision or change in the materials, use, and/or manufacture of the product or process shall automatically be cause for termination of this Acceptance, unless prior written approval has been requested (through the filing of a revision application with appropriate fee) and granted by this office.

5. Any of the following shall also be grounds for removal of this Acceptance:
   a) Unsatisfactory performance of this product or process.
   b) Misuse of this Acceptance as an endorsement of any product, for sales, advertising or any other purpose.

6. The Notice of Acceptance number preceded by the words Miami-Dade County, Florida, and followed by the expiration date may be displayed in advertising literature. If any portion of the Notice of Acceptance is displayed, then it shall be done in its entirety.

7. A copy of this Acceptance as well as approved drawings and other documents, where it applies, shall be provided to the user by the manufacturer or its distributors and shall be available for inspection at the job site at all time. The engineer need not reseal the copies.

8. Failure to comply with any section of this Acceptance shall be cause for termination and removal of Acceptance.

9. This Notice of Acceptance consists of pages 1, 2 and this last page 3.

END OF THIS ACCEPTANCE

Manuel Perez

Manuel Perez, P.E. Product Control Examiner
Product Control Division

Florida Lumber Co.

ACCEPTANCE No.: 01-0718.03

APPROVED : SEP 0 5 2001

EXPIRES : September 21, 2006

NOTICE OF ACCEPTANCE: EVIDENCE SUBMITTED
(For File ONLY. Not part of NOA.)

A. DRAWINGS

1. Manufacturer's die drawings and sections.
2. Drawing No **99005**, Sheets 1 through 1 of 1, titled "FBMA Series Fixed Wood Transom and Sidelite," prepared by manufacturer, dated 12/6/99.

B. TESTS (per FBMA in file No. 97-0049)

1. Test reports on:1.) Air Infiltration Test, per SFBC PA-202
2.) Water Resistance Test, per SFBC PA-202
3.) Uniform Static Air Pressure Test, per SFBC PA 202
4.) Forced Entry Resistance (FER), per SFBC PA-202 and Section 3603.02
along with installation diagram of a stile and rail wood French entry door system with 3/16" tempered glass, prepared by Construction Research Laboratory, Inc. Test Report No. **CRL-6116**, dated December 22, 1994, signed and sealed by Vipin N. Tolat, P.E.

2. Test reports on:1.) Air Infiltration Test, per SFBC PA-202
2.) Water Resistance Test, per SFBC PA-202
3.) Uniform Static Air Pressure Test, per SFBC PA 202
4.) Forced Entry Resistance (FER), per SFBC PA-202 and Section 3603.02
along with installation diagram of a stile and rail wood French entry door system with 1/2" overall insulated glass, prepared by Construction Research Laboratory, Inc. Test Report No. **CRL-6251**, dated September 22, 1995, signed and sealed by Vipin N. Tolat, P.E.

3. Test reports on 1) Air Infiltration Test, per PA 202-94
2) Uniform Static Air Pressure Test, Loading per 202-94
3) Water Resistance Test, per PA 202-94
4) Forced Entry Resistance Test, per SFBC and PA 202-94.
along with installation diagram of stile and rail wood raised panel wood door system prepared by Construction Research Laboratory, Inc. Test Report No. **CRL-6141**, dated March 7, 1995, signed and sealed by Vipin N. Tolat, P.E.

4. Test reports on:1.) Air Infiltration Test, per SFBC PA-202
2.) Water Resistance Test, per SFBC PA-202
3.) Uniform Static Air Pressure Test, per SFBC PA 202
4.) Forced Entry Resistance (FER), per SFBC PA-202 and Section 3603.02
along with installation diagram of a stile and rail wood French entry door system with 1/2" overall insulated glass, prepared by Construction Research Laboratory, Inc. Test Report No. **CRL-6251**, dated September 22, 1995, signed and sealed by Vipin N. Tolat, P.E.

Manuel Perez

Manuel Perez, P.E. Product Control Examiner
Product Control Division

NOTICE OF ACCEPTANCE: EVIDENCE SUBMITTED
(For File ONLY. Not part of NOA.)

5. Test reports on 1) Air Infiltration Test, per PA 202-94
   2) Uniform Static Air Pressure Test, Loading per 202-94
   3) Water Resistance Test, per PA 202-94
   4) Forced Entry Resistance Test, per SFBC and PA 202-94.

   along with installation diagram of eighteen lights, stile and rail wood French entry door system prepared by Construction Research Laboratory, Inc. Test Report No. **CRL-6158**, dated March 9, 1995, signed and sealed by Vipin N. Tolat, P.E.
6. Test reports on 1) Air Infiltration Test, per PA 202-94
   2) Uniform Static Air Pressure Test, Loading per 202-94
   3) Water Resistance Test, per PA 202-94
   4) Forced Entry Resistance Test, per SFBC and PA 202-94.
   5) Large Missile Impact Test, per PA 201-94
   6) Cyclic Loading Test, per PA 203-94

   along with installation diagram of framed block glued core wood door system prepared by Construction Research Laboratory, Inc. Test Report No. **CRL-6107**, dated March 7, 1995, signed and sealed by Vipin N. Tolat, P.E.

Tests reports **No. CRL-6116** and **CRL-6251** with the lowest Design Pressure Rating values were used to qualify all types of panel. The rest of the test reports No. **CRL-6251**, **CRL-6158** and **CRL-6107** with higher Design Pressure Rating were also reviewed in approval.

C. CALCULATIONS (per FBMA in file No. 97-0049)

1. Anchor calculations prepared by Product & Application Engineering, Inc., Project #97-0310, Report No. 03, dated April 9, 1997 and Project #97-0814, Report No.01, dated 9/12/97, all signed and sealed by David A. Terwilleger, P.E.

D. MATERIAL CERTIFICATIONS

1. None.

E. STATEMENTS

1. Release letter issued by Florida Building Material Association (FBMA) Millwork Division, dated July 2, 2001 certifying this product to meet the criteria of product tested and approved and allowing Florida Lumber Company to use test results approved under Miami-Dade County approval number 97-0049B, signed by Mr. George W. Tucker.
2. Acknowledgement letter by Florida Lumber Company dated July 11, 2001, signed by Mr. Wilfredo Perez.

F. OTHER

1. Notice of Acceptance No. **98-0317.07**, issued to Florida Lumber Co. for their Fixed Wood Transom and Sidelite, approved on 9/21/98 and expiring on 9/21/01.

Manuel Perez, P.E. Product Control Examiner
Product Control Division

CONSTRUCTION
Door Slab: Glued block and face veneer wood or solid
Stiles & Rails: (Douglas Fir) wood.
Frame: (White Pine or better) Finger Joint Wood.

Sealant: The frame intersections and entire panel/frame perimeter must be caulked with Polyseamseal or DAP adhesive sealant during assembly.

3'-0" x 8'-0" SIDELITE
8'-0" x 3'-0" TRANSOM

OVERALL SIZE: 37 3/4" x 97 1/4" MAX. SIZE

WOOD CONSTRUCTION

Minimum Dimensions
Stiles ..... 4 1/2" Face x 1 3/4" Thick
Top Rail ..... 6 1/2" Face x 1 3/4" Thick
Bottom Rail ..... 9 3/4" Face x 1 3/4" Thick

GLAZING OPTIONS
- Monolithic Glazing = 3/16" Tempered
- Insulated = 1/2" overall with Two (2) Lights of 1/8" DSB tempered, 1/4" Airspace
- Optional Decorative Glass may be inserted inside air space

DESIGN PRESSURE RATING
+48.3 PSF
-58.5 PSF

THESE DOORS REQUIRE MIAMI DADE COUNTY APPROVED SHUTTERS.

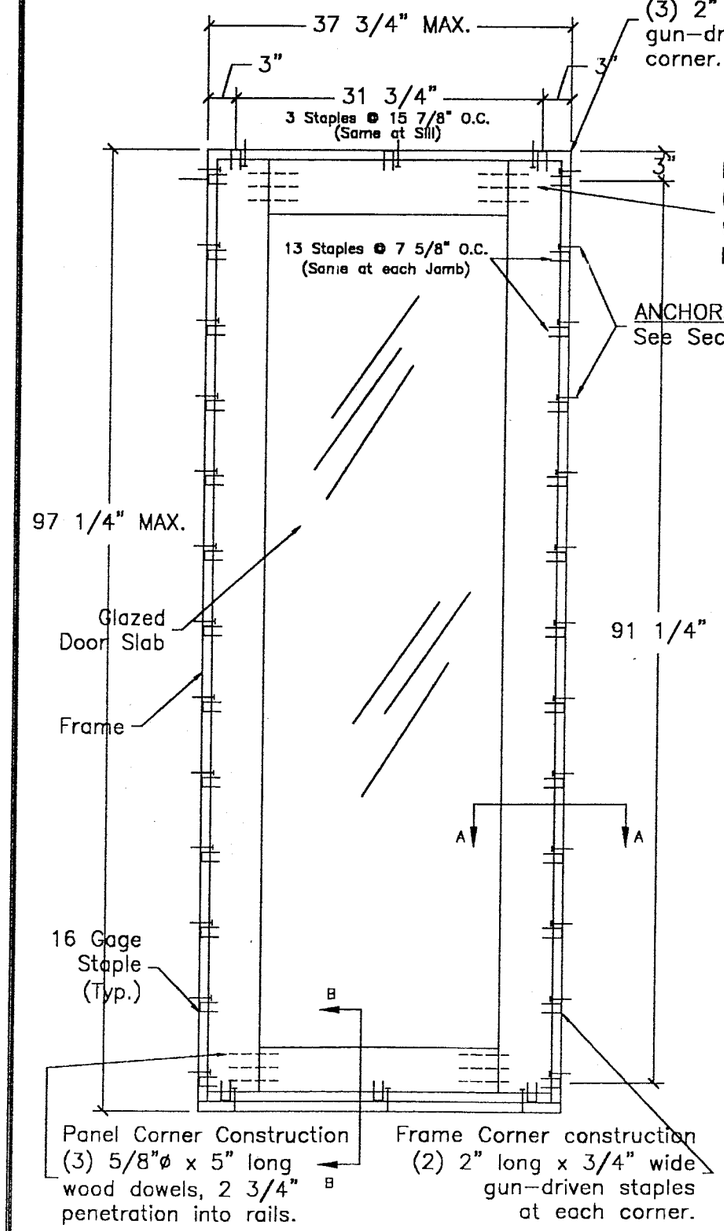

Frame Corner construction (3) 2" long x 3/4" wide gun-driven staples at each corner.

Panel Corner Construction (3) 5/8"ø x 5" long wood dowels, 2 3/4" penetration into rails.

ANCHORS See Section ①②

Panel Corner Construction (3) 5/8"ø x 5" long wood dowels, 2 3/4" penetration into rails.

Frame Corner construction (2) 2" long x 3/4" wide gun-driven staples at each corner.

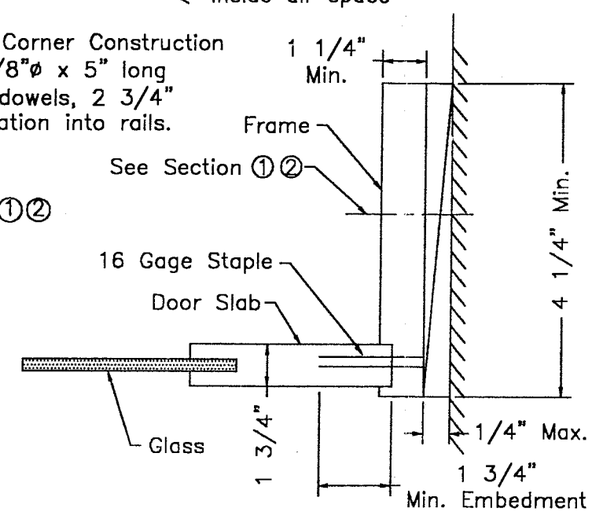

SECTION A-A
(Typical at Head & Jambs)

Interior glazed, set in adhesive bedding compound and using 3/8" high x 5/8" wide Ovolo Wood Moulding all around. Fasten to door using 5/8" long x 3/16" wide crown gun-driven wire staples at 5" o.c. for the horizontal edge and 8" o.c. for the vertical edge.

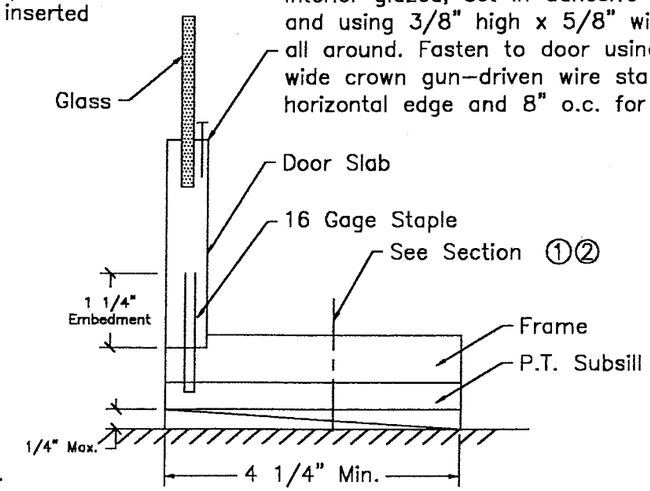

SECTION B-B
(At Sill only)

① Attachment to wood buck – Using #10 CP PFH WS through the jamb, head and sill wood frame and P.T. subsill portion into the 2X subbuck, penetrating a minimum distance of 1-3/8".
Head and Sill: Three #10 CP PFH WS, located at 6" from corners and one at midspan.
Jambs: #10 x 2-1/2" CP FHWS located at 6" from corners and the rest at 17" o.c. max.

② Attachment to masonry – Using 3/16" PFH Rawl Tapper through the jamb, head and sill wood frame and P.T. subsill portion into masonry, penetrating a minimum distance of 1-1/4".
Head and Sill: 3/16" PFH Rawl Tapper, located at 6" from corners and one at midspan.
Jambs: 3/16" PFH Rawl Tapper, located at 6" from corners and the rest at 17" o.c. max.

APPROVED AS COMPLYING WITH THE SOUTH FLORIDA BUILDING CODE
DATE SEP 05 2001
BY Manuel Perez
PRODUCT CONTROL DIVISION
BUILDING CODE COMPLIANCE OFFICE
ACCEPTANCE NO. 01-0718.03

FLORIDA LUMBER CO.
2431 N.W. 20 ST
MIAMI, FL 33142-0977
(305) - 6356412

Drawn by: E.D. & D.
Date: 12/6/99
Revisions:
Drawing #99005
Drawing Title: FBMA SERIES FIXED WOOD TRANSOM AND SIDELITE
Page 1 of 1