MIAMI-DADE

MIAMI-DADE COUNTY, FLORIDA
METRO-DADE FLAGLER BUILDING

BUILDING CODE COMPLIANCE OFFICE
METRO-DADE FLAGLER BUILDING
140 WEST FLAGLER STREET, SUITE 1603
MIAMI, FLORIDA 33130-1563
(305) 375-2901 FAX (305) 375-2908

CONTRACTOR LICENSING SECTION
(305) 375-2527 FAX (305) 375-2558

CONTRACTOR ENFORCEMENT DIVISION
(305) 375-2966 FAX (305) 375-2908

PRODUCT CONTROL DIVISION
(305) 375-2902 FAX (305) 372-6339

PRODUCT CONTROL NOTICE OF ACCEPTANCE

Star Building Systems
8600 S. I-35
Oklahoma City ,OK 73143

Your application for Notice of Acceptance (NOA) of:
"Dura Rib" 0.026" (min.) Structural Galvalume Steel Roof Panel System
under Chapter 8 of the Code of Miami-Dade County governing the use of Alternate Materials and Types of Construction, and completely described herein, has been recommended for acceptance by the Miami-Dade County Building Code Compliance Office (BCCO) under the conditions specified herein.

This NOA shall not be valid after the expiration date stated below. BCCO reserves the right to secure this product or material at any time from a jobsite or manufacturer's plant for quality control testing. If this product or material fails to perform in the approved manner, BCCO may revoke, modify, or suspend the use of such product or material immediately. BCCO reserves the right to revoke this approval, if it is determined by BCCO that this product or material fails to meet the requirements of the South Florida Building Code.

The expense of such testing will be incurred by the manufacturer.

ACCEPTANCE NO.: 01-0718.10
EXPIRES: 08/27/2006

Raul Rodriguez
Chief Product Control Division

THIS IS THE COVERSHEET, SEE ADDITIONAL PAGES FOR SPECIFIC AND GENERAL CONDITIONS
BUILDING CODE & PRODUCT REVIEW COMMITTEE

This application for Product Approval has been reviewed by the BCCO and approved by the Building Code and Product Review Committee to be used in Miami-Dade County, Florida under the conditions set forth above.

Francisco J. Quintana, R.A.
Director
Miami-Dade County
Building Code Compliance Office

APPROVED: 08/16/2001

Star Building Systems

ACCEPTANCE No. : 01-0718.10

APPROVED : 08/16/2001

EXPIRES : 08/27/2006

NOTICE OF ACCEPTANCE: SPECIFIC CONDITIONS

1. SCOPE

This renews the Notice of Acceptance No. 98-0122.03, which was issued on August 27, 1998. It approves an 0.026" (min.) Structural Galvalume Steel Roof Panel, as described in Section 2 of this Notice of Acceptance, designed to comply with the South Florida Building Code, 1994 Edition for Miami-Dade County, for the locations where the load requirements, as determined by SFBC Chapter 23, do not exceed the design load values indicated in the approved drawings.

2. PRODUCT DESCRIPTION

This 0.026" (min.) Structural Galvalume Steel Roof Panel and its components shall be constructed in strict compliance with the following documents: Drawing No. 98D, titled "Dura-Rib Roof ", prepared by Kwon S. Kim, P.E., dated January 15, 1998, last revised on August 2, 2001, sheets 1 through 3 of 3, bearing the Miami-Dade County Product Control renewal stamp with the Notice of Acceptance number and expiration date by the Miami-Dade County Product Control Division. These documents shall hereinafter be referred to as the approved drawings.

3. LIMITATIONS

All permanent set components must be protected against corrosion, contamination and damage at all times.

4. INSTALLATION

This 0.026" (min.) Structural Galvalume Steel Roof Panel and its components shall be installed in strict compliance with the approved drawings.

5. LABELING

Each panel shall bear a permanent label with the manufacturer's name or logo, city, state and the following statement: "Miami-Dade County Product Control Approved".

6. BUILDING PERMIT REQUIREMENTS

6.1 Application for building permit shall be accompanied by copies of the following:

6.1.1 This Notice of Acceptance.

6.1.2 Duplicate copies of the approved drawings, as identified in Section 2 of this Notice of Acceptance, clearly marked to show the components selected for the proposed installation.

6.1.3 Any other documents required by the Building Official or the South Florida Building Code (SFBC) in order to properly evaluate the installation of this system.

Helmy A. Makar

Helmy A. Makar, P.E.- Product Control Examiner
Product Control Division

Star Building Systems

ACCEPTANCE No. : 01-0718.10

APPROVED : 08/16/2001

EXPIRES : 08/27/2006

NOTICE OF ACCEPTANCE: STANDARD CONDITIONS

1 Renewal of this Acceptance (approval) shall be considered after a renewal application has been filed and the original submitted documents, including test-supporting data, engineering documents, are no older than eight (8) years.

2. Any and all approved products shall be permanently labeled with the manufacturer's name, city, state, and the following statement: "Miami-Dade County Product Control Approved", or as specifically stated in the specific conditions of this Acceptance.

3. Renewals of Acceptance will not be considered if:
   a. There has been a change in the South Florida Building Code affecting the evaluation of this product and the product is not in compliance with the code changes.
   b. The product is no longer the same product (identical) as the one originally approved.
   c. If the Acceptance holder has not complied with all the requirements of this acceptance, including the correct installation of the product.
   d. The engineer, who originally prepared, signed and sealed the required documentation initially submitted, is no longer practicing the engineering profession.

4. Any revision or change in the materials, use, and/or manufacture of the product or process shall automatically be cause for termination of this Acceptance, unless prior written approval has been requested (through the filing of a revision application with appropriate fee) and granted by this office.

5. Any of the following shall also be grounds for removal of this Acceptance:
   a. Unsatisfactory performance of this product or process.
   b. Misuse of this Acceptance as an endorsement of any product, for sales, advertising or any other purposes.

6. The Notice of Acceptance number preceded by the words Miami-Dade County, Florida, and followed by the expiration date may be displayed in advertising literature. If any portion of the Notice of Acceptance is displayed, then it shall be done in its entirety.

7. A copy of this Acceptance as well as approved drawings and other documents, where it applies, shall be provided to the user by the manufacturer or its distributors and shall be available for inspection at the job site at all time. The engineer needs not reseal the copies.

8. Failure to comply with any section of this Acceptance shall be cause for termination and removal of Acceptance.

9. This Notice of Acceptance consists of pages 1, 2 and this last page 3.

END OF THIS ACCEPTANCE

Helmy A. Makar

Helmy A. Makar, P.E.- Product Control Examiner
Product Control Division

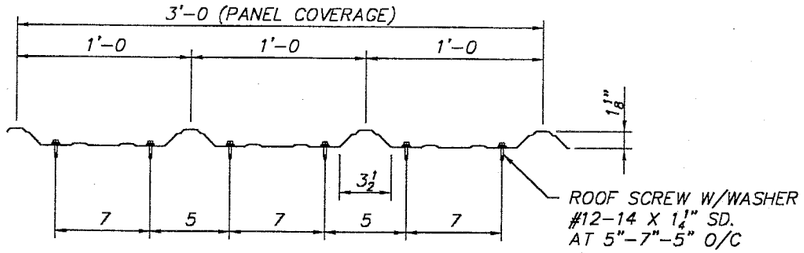

DURA-RIB ROOF PANEL

PANEL : 0.026" thick coated steel with min yield 50. ksi.

FINISH : PAINT ON GALVLUME OR GALVALUME.
PAINT TYPE : KYNAR OR SILICON POLY.
ROOF SCREW; STRUCTURAL SCREW : #12-14 X 1 1/4" SD.
LAP SCREW; SIDE LAP : 1/4-14 X 3/4" SD.

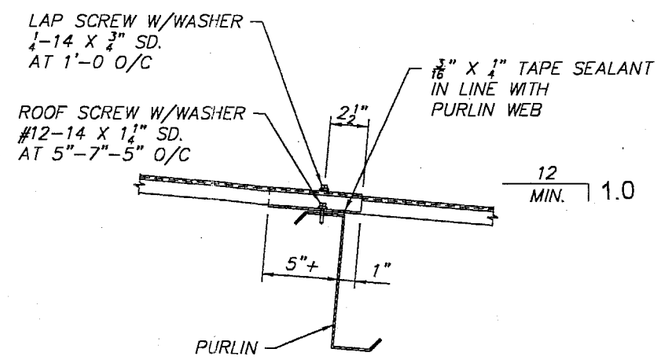

DETAIL "A"

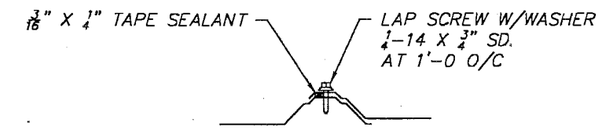

DETAIL "B"

980908

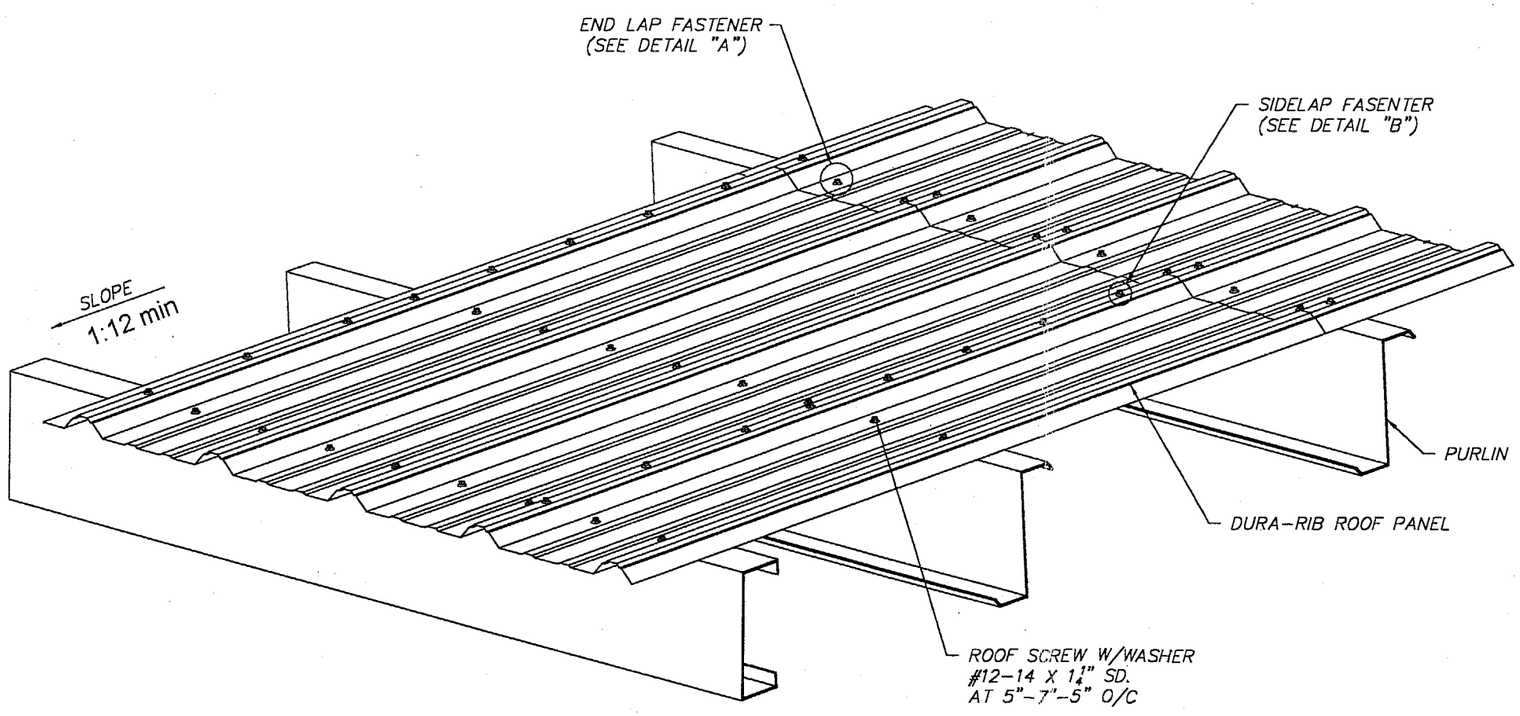

ISOMETRIC VIEW OF DURA-RIB ROOF PANEL

Kwon Sun Kim
8/8-01

Rev. 08-02-01 per the Code
1. 24 gage to 0.026" coated thickness
2. min. roof slope from 1/2:12 to 1:12

PRODUCT RENEWED
ACCEPTANCE No. 01-0718.10
EXPIRATION DATE 08/27/2006
By Helmy A. Mahr
PRODUCT CONTROL DIVISION
BUILDING CODE COMPLIANCE OFFICE

PRODUCT : DURA-RIB ROOF
PROJECT : METRO DADE COUNTY APPROVAL

STAR BUILDING SYSTEMS
8600 S. I-35
OKLA. CITY, OK. 73143

SUBMITTED BY: KWON S. KIM	FL. PE#: 30320
DWG. NO. 98D SHEET 1 OF 3	DATE : 1-15-98

General Notes

1. DuraRib roof panel shall be roll formed from 0.026" thick coated steel with minimum yield of 50 ksi. Each roll formed panel shall be a AZ55 Galvalume coated per ASTM A792.

2. Purlins shall be fabricated from cold rolled steel shapes with a min of 0.064" thick.

3. The perimeter frame shall be fabricated a cold rolled shapes with 0.092" min thickness.

4. All end and side laps of the steel panel shall be sealed using 3/16" x ¼" mastic tape.

5. The 0.026" thick coated steel with min yield of 50 ksi, DuraRib panel shall be used for the roof construction. Every actual roof project shall be constructed using the same details shown on this drawing including.
   a. Details of all panel material characteristics and sections with dimensions and thickness.
   b. Assembly details including all connections and fastener diagram with size and location.
   c. Panel maximum span and pressure for the field, perimeters, and corners based on the panel allowable load shown below.

6. The maximum span and pressure for the 0.026" coated steel with min yield of 50 ksi DuraRib roof panel in the roof's field, perimeter and corner zones shall be based on the following allowable;
   1. Max allowable bending moment of panel at support = 100.0 ft-lbs.
   2. Max allowable bending moment of panel between supports = 80.0 ft-lbs.
   3. EI value of panel = 745,200. Lbs-in^2.
   4. Max allowable deflection of the roof panel = L / 240.
   5. Max support reaction = 220.0 lbs. (for two #12-14x1 ¼" SDS w/ sealing washer every 12")

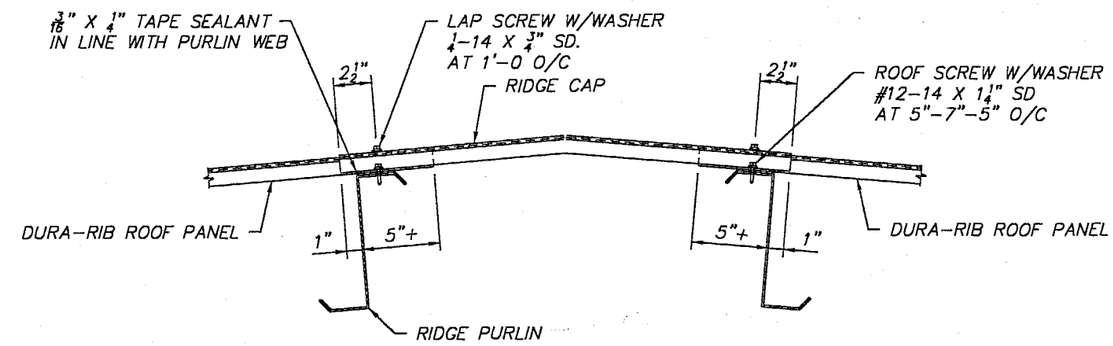

TYPICAL RIDGE DETAIL

980908

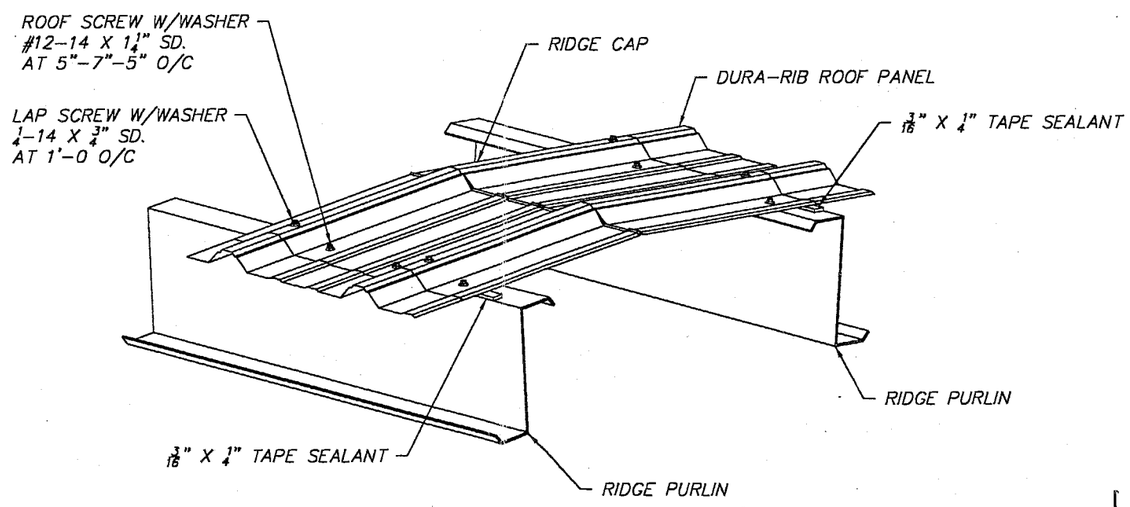

ISOMETRIC VIEW OF RIDGE

PRODUCT RENEWED
ACCEPTANCE No. 01-0718.10
EXPIRATION DAT: 08/27/2006
By Helmy A. Mahfouz
PRODUCT CONTROL DIVISION
BUILDING CODE COMPLIANCE OFFICE

8/8-01

Rev. 08-02-01 per the Code
1. 24 gage to 0.026" coated thickness
2. min. roof slope from 1/2:12 to 1:12

PRODUCT : DURA-RIB ROOF
PROJECT : METRO DADE COUNTY APPROVAL

STAR BUILDING SYSTEMS
8600 S. I-35
OKLA. CITY, OK. 73143

SUBMITTED BY: KWON S. KIM	FL. PE#: 30320
DWG. NO. 98D SHEET 2 OF 3	DATE : 1-15-98

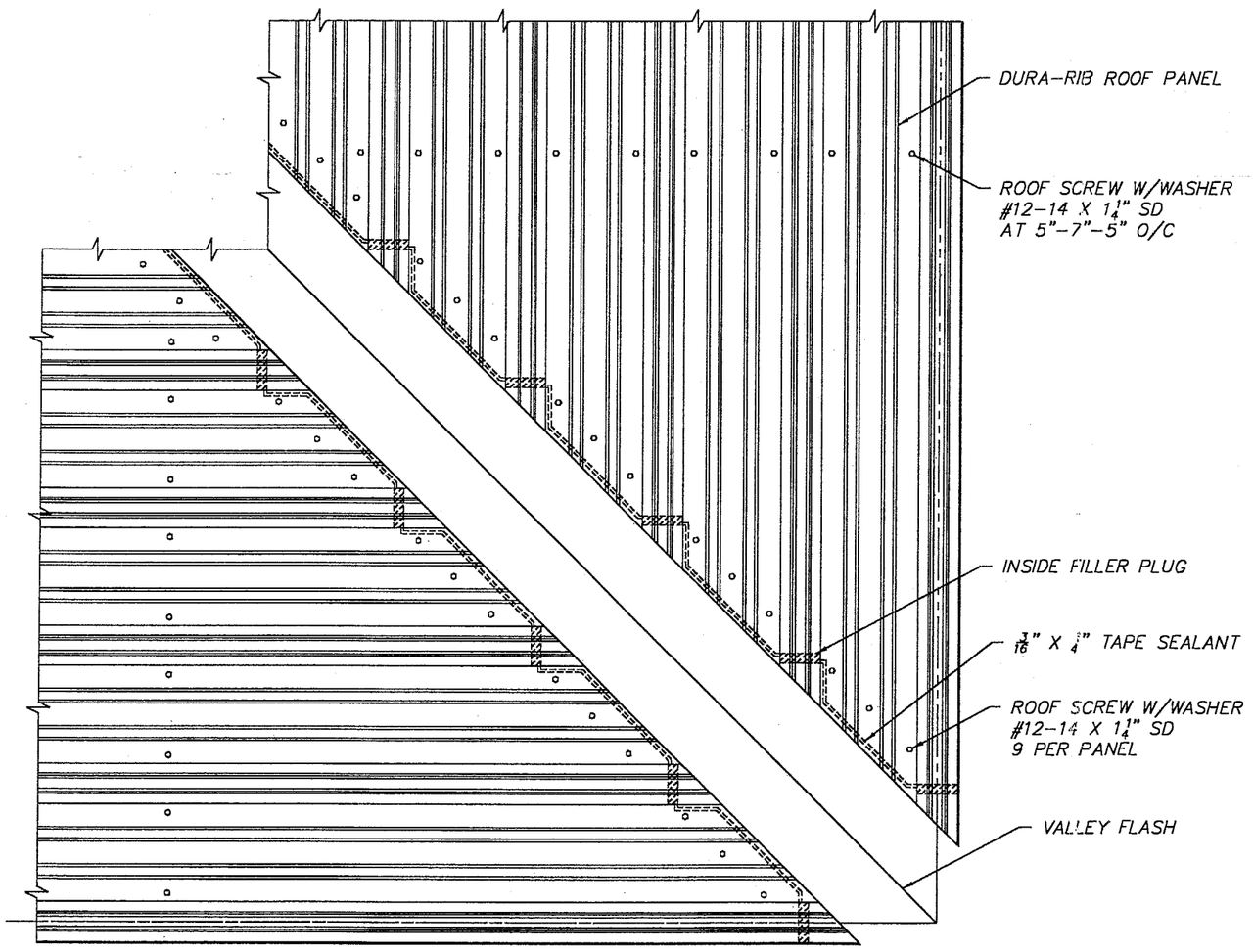

PLAN VIEW OF VALLEY

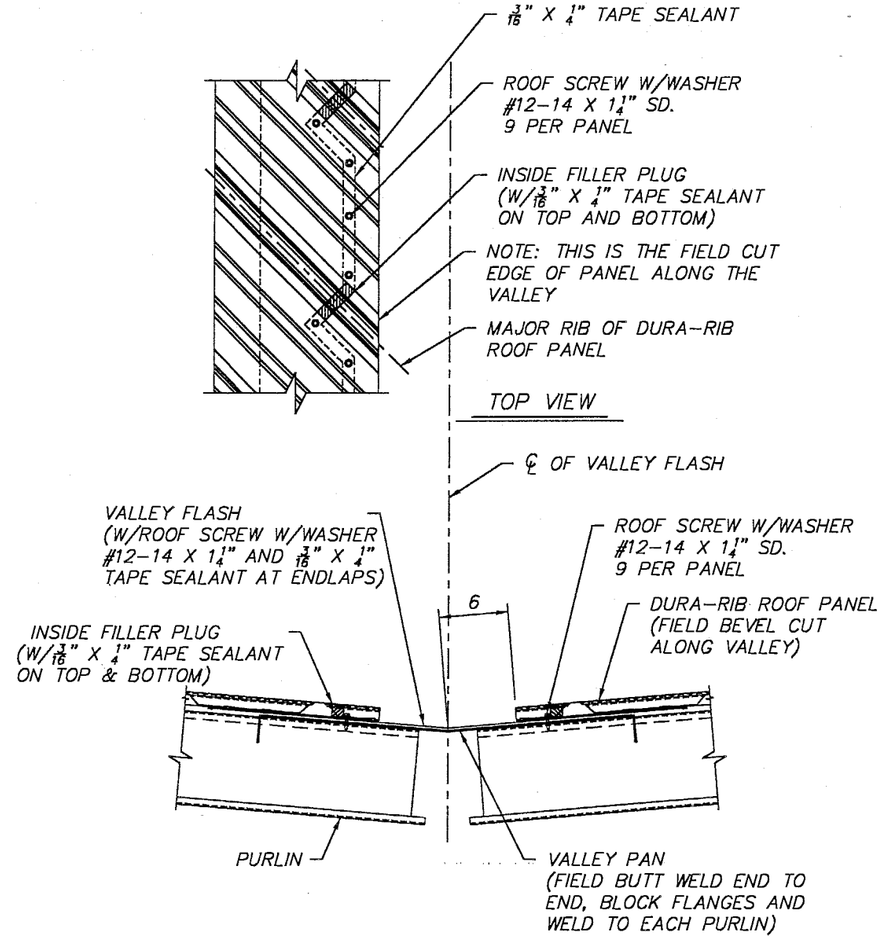

VALLEY DETAIL

980908

PRODUCT RENEWED

ACCEPTANCE No. 01-0718.10

EXPIRATION DAT: 08/27/2006

By Helmy A. Meler

PRODUCT CONTROL DIVISION
BUILDING CODE COMPLIANCE OFFICE

PRODUCT : DURA-RIB ROOF

PROJECT : METRO DADE COUNTY APPROVAL

Rev. 08-02-01 per the Code
1. 24 gage to 0.026" coated thickness
2. min. roof slope from 1/2:12 to 1:12

8/8-01

STAR BUILDING SYSTEMS

8600 S. I-35
OKLA. CITY, OK. 73143

SUBMITTED BY: KWON S. KIM	FL. PE#: 30320
DWG. NO. 98D SHEET 3 OF 3	DATE : 1-15-98