MIAMI-DADE COUNTY, FLORIDA
METRO-DADE FLAGLER BUILDING

**BUILDING CODE COMPLIANCE OFFICE**
METRO-DADE FLAGLER BUILDING
140 WEST FLAGLER STREET, SUITE 1603
MIAMI, FLORIDA 33130-1563
(305) 375-2901 FAX (305) 375-2908

**CONTRACTOR LICENSING SECTION**
(305) 375-2527 FAX (305) 375-2558

**CONTRACTOR ENFORCEMENT DIVISION**
(305) 375-2966 FAX (305) 375-2908

**PRODUCT CONTROL DIVISION**
(305) 375-2902 FAX (305) 372-6339

# PRODUCT CONTROL NOTICE OF ACCEPTANCE

**PGT Industries**
**1070 Technology Drive**
**Nokomis ,FL 34275**

Your application for Notice of Acceptance (NOA) of:
**Series 2500 Sliding Glass Door**
under Chapter 8 of the Code of Miami-Dade County governing the use of Alternate Materials and Types of Construction, and completely described herein, has been recommended for acceptance by the Miami-Dade County Building Code Compliance Office (BCCO) under the conditions specified herein.

This NOA shall not be valid after the expiration date stated below. BCCO reserves the right to secure this product or material at any time from a jobsite or manufacturer's plant for quality control testing. If this product or material fails to perform in the approved manner, BCCO may revoke, modify, or suspend the use of such product or material immediately. BCCO reserves the right to revoke this approval, if it is determined by BCCO that this product or material fails to meet the requirements of the South Florida Building Code.

The expense of such testing will be incurred by the manufacturer.

**ACCEPTANCE NO.: 01-0724.01**
**EXPIRES: 12/06/2006**

Raul Rodriguez
Chief Product Control Division

**THIS IS THE COVERSHEET, SEE ADDITIONAL PAGES FOR SPECIFIC AND GENERAL CONDITIONS**
**BUILDING CODE & PRODUCT REVIEW COMMITTEE**

This application for Product Approval has been reviewed by the BCCO and approved by the Building Code and Product Review Committee to be used in Miami-Dade County, Florida under the conditions set forth above.

Francisco J. Quintana, R.A.
Director
Miami-Dade County
Building Code Compliance Office

**APPROVED: 12/06/2001**

## NOTICE OF ACCEPTANCE: SPECIFIC CONDITIONS

**1. SCOPE**

**1.1** This **revises & renews** the Notice of Acceptance No. **98-0218.03**, which was issued on March 29, 1999 It approves an aluminum sliding glass door, as described in Section 2 of this Notice of Acceptance, designed to comply with the South Florida Building Code, 1994 Edition for Miami-Dade County, for the locations where the pressure requirements, as determined by SFBC Chapter 23, do not exceed the Design Pressure Rating values indicated in the approved drawings.

**2. PRODUCT DESCRIPTION**

**2.1** The **Series 2500 Aluminum Sliding Glass Door** and its components shall be constructed in strict compliance with the following document: Drawing No. **742**, Sheet 1 of 6 titled "SGD OXXO Elevation w/Windclips," Sheet 2 of 6 titled "3-Track Frame Assembly," Sheet 3 of 6 titled "SGD Panel (2500) Assy.," Sheet 4 of 6 titled "SGD 2500 w/Steel Reinforcement," Sheet 5 of 6 titled "Comparative Analysis", and Sheet 6 of 6 titled "Typical Anchorage Detail," prepared by Vinyl Tech/Progressive Glass Technology, dated March 18, 1998, last revised November 02, 2001, signed and sealed by Robert L. Clark, P. E. ,bearing the Miami-Dade County Product Control Approval stamp with the Notice of Acceptance number and approval date by the Miami-Dade County Product Control Division. These documents shall hereinafter be referred to as the approved drawings.

**3. LIMITATIONS**

**3.1** This approval applies to single unit applications only, as shown in approved drawings.

**3.2** Head receptor is not allowed to be used in this installation.

**4. INSTALLATION**

**4.1** The aluminum sliding glass door and its components shall be installed in strict compliance with the approved drawings.

**4.2** The installation of this product **will require** a hurricane protection system.

**5. LABELING**

**5.1** Each unit shall bear a permanent label with the manufacturer's name or logo, city, state and following statement: "Miami-Dade County Product Control Approved".

**6. BUILDING PERMIT REQUIREMENTS**

**6.1** Application for building permit shall be accompanied by copies of the following:

**6.1.1** This Notice of Acceptance.

**6.1.2** Duplicate copies of the approved drawings, as identified in Section 2 of this Notice of Acceptance, clearly marked to show the components selected for the proposed installation.

**6.1.3** Any other documents required by the Building Official or the South Florida Building Code (SFBC) in order to properly evaluate the installation of this system.

Ishaq I. Chanda

Ishaq I. Chanda, P.E., Product Control Examiner
Product Control Division

**Vinyl Tech/Progressive Glass Technology**

**ACCEPTANCE No. : 01-0724.01**

**APPROVED : December 06, 2001**

**EXPIRES : December 06, 2006**

## NOTICE OF ACCEPTANCE: STANDARD CONDITIONS

1 Renewal of this Acceptance (approval) shall be considered after a renewal application has been filed and the original submitted documents, including test-supporting data, engineering documents, are no older than eight (8) years.

2. Any and all approved products shall be permanently labeled with the manufacturer's name, city, state, and the following statement: "Miami-Dade County Product Control Approval", or as specifically stated in the specific conditions of this Acceptance.

3. Renewals of Acceptance will not be considered if:
   a. There has been a change in the South Florida Building Code affecting the evaluation of this product and the product is not in compliance with the code changes.
   b. The product is no longer the same product (identical) as the one originally approved.
   c. If the Acceptance holder has not complied with all the requirements of this acceptance, including the correct installation of the product.
   d. The engineer who originally prepared, signed and sealed the required documentation initially submitted, is no longer practicing the engineering profession.

4. Any revision or change in the materials, use, and/or manufacture of the product or process shall automatically be cause for termination of this Acceptance, unless prior written approval has been requested (through the filing of a revision application with appropriate fee) and granted by this office.

5. Any of the following shall also be grounds for removal of this Acceptance:
   a. Unsatisfactory performance of this product or process.
   b. Misuse of this Acceptance as an endorsement of any product, for sales, advertising or any other purposes.

6. The Notice of Acceptance number preceded by the words Miami-Dade County, Florida, and followed by the expiration date may be displayed in advertising literature. If any portion of the Notice of Acceptance is displayed, then it shall be done in its entirety.

7. A copy of this Acceptance as well as approved drawings and other documents, where it applies, shall be provided to the user by the manufacturer or its distributors and shall be available for inspection at the job site at all time. The engineer needs not reseal the copies.

8. Failure to comply with any section of this Acceptance shall be cause for termination and removal of Acceptance.

9. This Notice of Acceptance consists of pages 1, 2 and this last page 3.

**END OF THIS ACCEPTANCE**

Ishaq I. Chanda

Ishaq I. Chanda, P.E., Product Control Examiner.,
Product Control Division

PART #7LSLIA WIND CLIPS ARE REQUIRED FOR HIGH WIND LOAD INSTALLATION.
CLIPS MAY NOT BE REQUIRED FOR INLAND FIRST FLOOR APPLICATION.
CLIPS REQUIRE SILL WITH SCREEN RAIL FOR PROPER INSTALLATION.

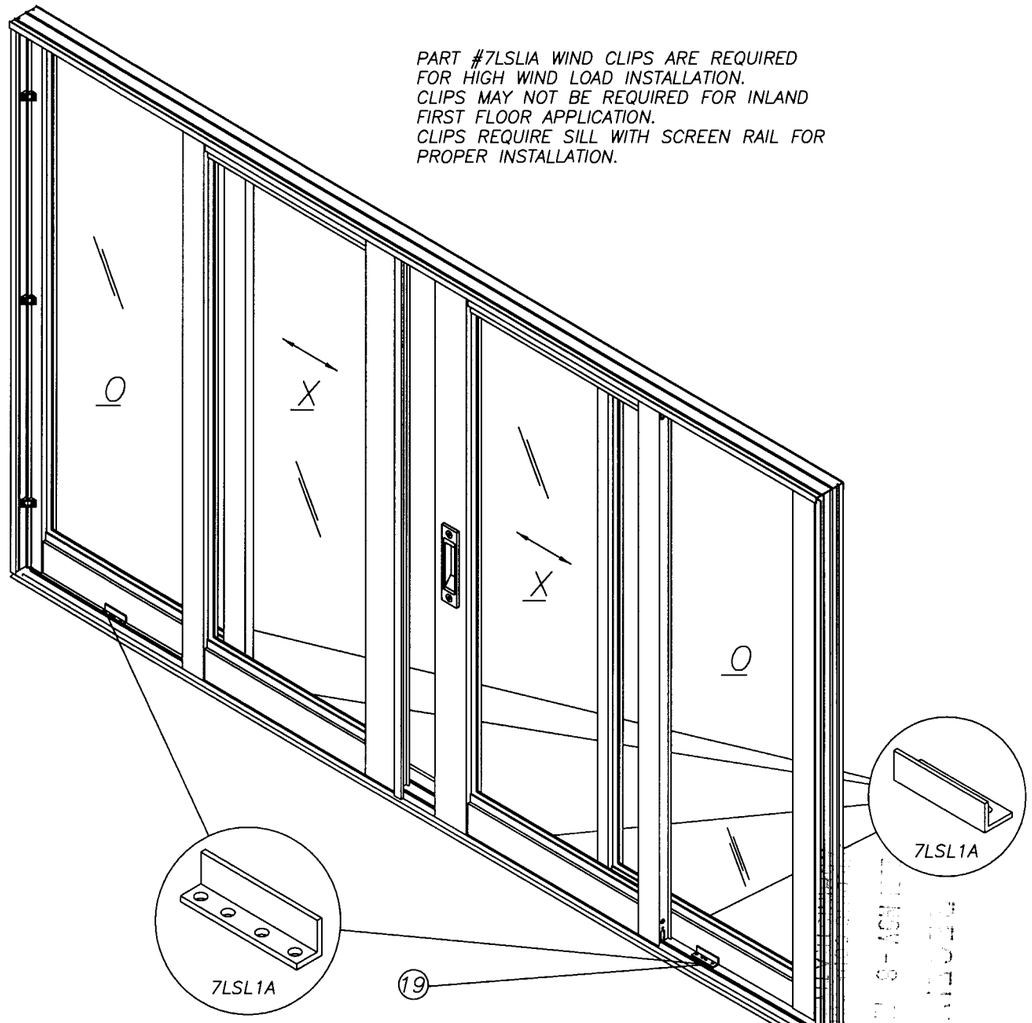


ONE 7/8" x 5/8" x 1/8" x 4" LONG ALUM. RETAINER ANGLE IN FRAME SILL AT MID SPAN OF EACH PANEL BOTTOM RAIL, SECURED TO FRAME WITH FOUR #10 x 1 1/2" FLT. HEAD TAPCON TO BE FURNISHED BY INSTALLER.

REMOVE TOP RAIL ASSEMBLY SCREWS AND REUSE TO INSTALL TOP FIXED PANEL CLIP TO PANEL JAMB. USE TWO #10 x 3/4" PAN HEAD PHIL(7S134) TO ATTACH CLIP TO MAIN FRAME HEAD.

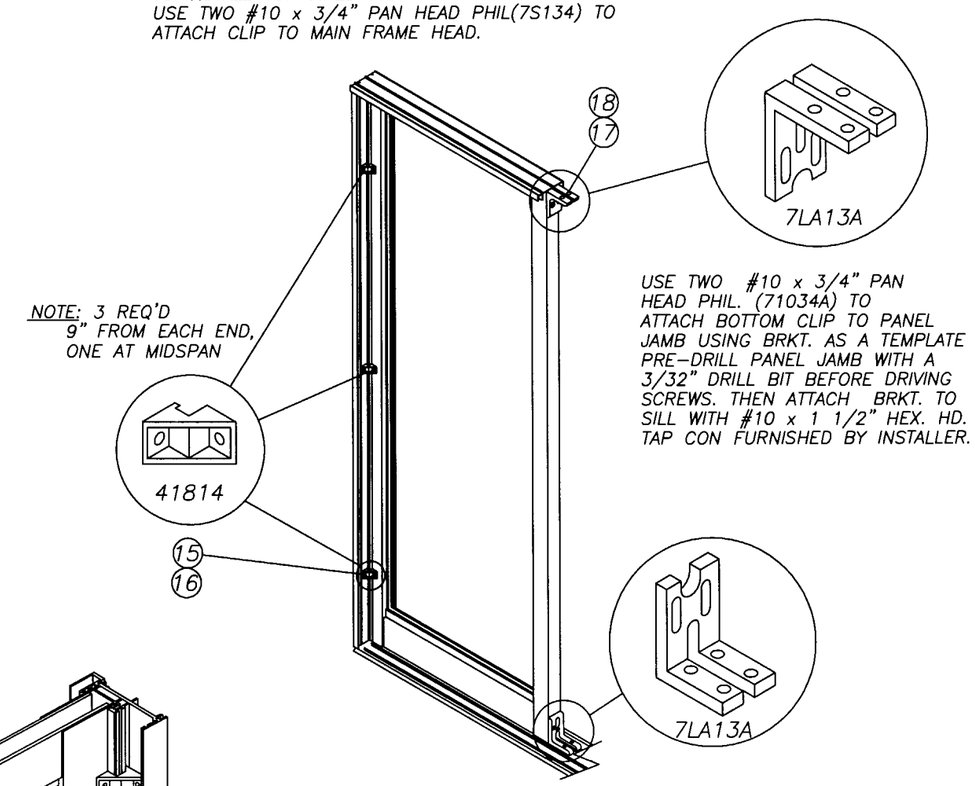


USE TWO #10 x 3/4" PAN HEAD PHIL. (71034A) TO ATTACH BOTTOM CLIP TO PANEL JAMB USING BRKT. AS A TEMPLATE PRE-DRILL PANEL JAMB WITH A 3/32" DRILL BIT BEFORE DRIVING SCREWS. THEN ATTACH BRKT. TO SILL WITH #10 x 1 1/2" HEX. HD. TAP CON FURNISHED BY INSTALLER.

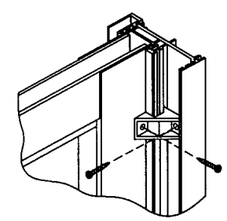

FOR FIXED SLIDING GLASS DOOR PANEL INSTALLATION USE PART NUMBER 41814 IN BRONZE, WHITE, OR SILVER TO MATCH DOOR FINISH AND INSTALL WITH #8 x 3/4" (7834AA) PAN HEAD PHILLIPS SCREW AS SHOWN.

USING BRACKET AS A TEMPLATE PRE-DRILL LOCK STILE AND JAMB WITH A 3/32" DRILL BIT BEFORE DRIVING SCREWS.

USE THREE BRACKETS PER PANEL AT TOP, MIDDLE AND BOTTOM OF PANEL.

**PRODUCT RENEWED**

ACCEPTANCE No. 01-0724.01

EXPIRATION DATE DECEMBER 06, 2006

By Ishaq J. Chanda

PRODUCT CONTROL DIVISION
BUILDING CODE COMPLIANCE OFFICE

## NON-IMPACT WINDOWS

1.) GLAZING: 3/16" TEMPERED
2.) CONFIGURATIONS: OX
3.) DESIGN PRESSURE RATING:
SEE COMPARATIVE ANALYSIS TABLE SHEET 5 OF 6
4.) ANCHORS:
TYP. DOUBLE ROW OF ANCHORS IN HEAD, SILL & JAMBS
TYP. 6" FROM CORNERS IN HEAD,SILL & JAMBS
TYP. 24" ON CENTER IN HEAD, SILL & JAMBS
5.) SHUTTER REQUIREMENT:
MIAMI-DADE COUNTY APPROVED SHUTTERS ARE REQUIRED AT ALL INSTALLATIONS

11/6/01
Robert L. Clark, P.E.
PE #39712
Structural

| | | | | | |
|---|---|---|---|---|---|
| Revisions: _ | VINYL TECH Manufactures of Quality Vinyl Enclosures / progressive GLASS technology Manufactures of Standard & Custom Glass Windows | | | | |
| Material: | Classification: | Prod. Category: SGD | Series/Model: 2500 | Item: ELEV. | Sheet: 1 of 6 |
| Drawn By: D.B. / Date: 3/18/98 | Description: SGD OXXO ELEVATION w/WINDCLIPS | | | | |
| Revised By: F.K. / Date: 11/2/01 | | | | | |
| Vendor No.: / Scale: N.T.S. | Address: P.O. BOX 1529 NOKOMIS, FL. 34274 | Size: B | Drawing No.: 742 | Rev.: D | |

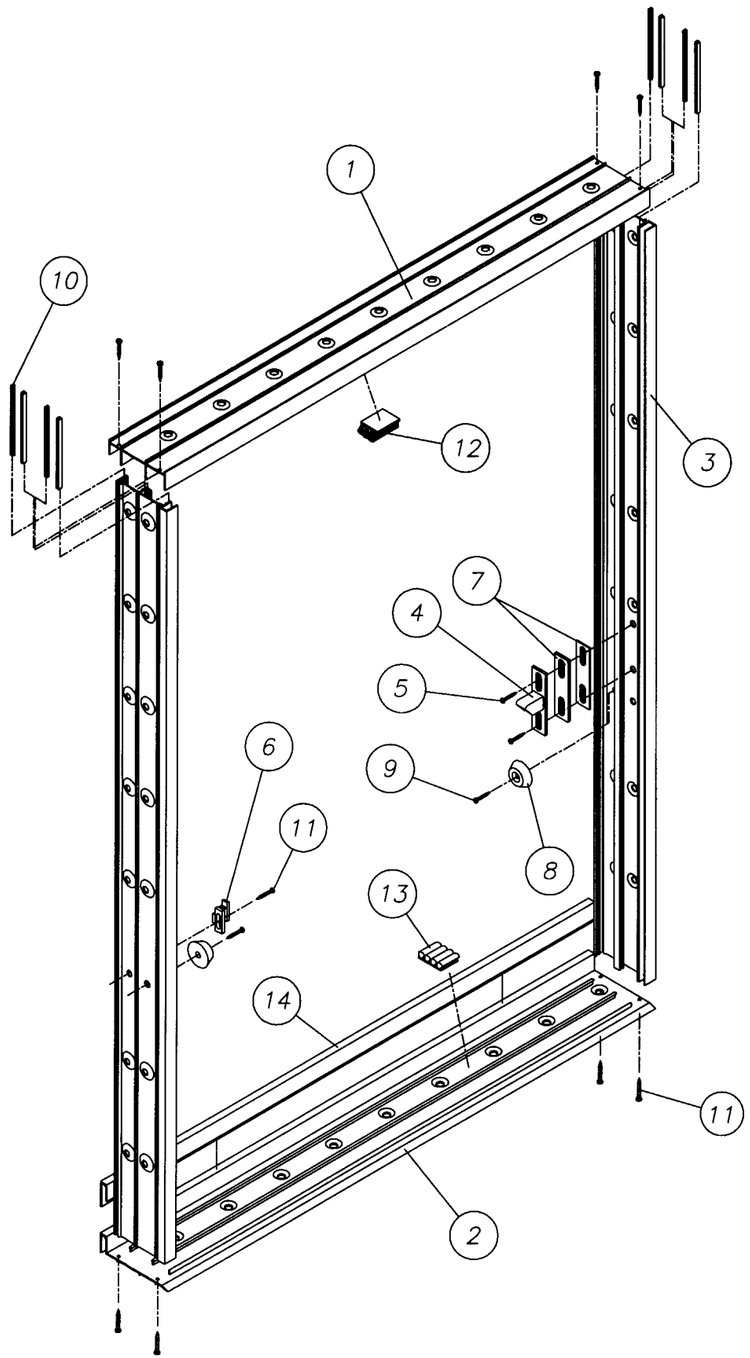


| ITEM | DESCRIPTION | V.T. # | VENDOR | VENDOR # |
|---|---|---|---|---|
| 1 | FRAME HEAD – 3 TRACK | 68182 | ALUMAX | AF–8182 |
| 2 | FRAME SILL – 3 TRACK | 68184 | ALUMAX | AF–8184 |
| 3 | FRAME JAMB – 3 TRACK | 68183 | ALUMAX | AF–8183 |
| 4 | LATCH KEEPER | 7SDKEEP | NATIONWIDE INDUSTRIES | |
| 5 | #8 x 1/2 SCREW TRUSS HD. PHIL. | 78X12TSAZ | MERCHANTS FASTENER CORP. | |
| 6 | SCREEN KEEPER | 41804 | VINYL TECH./PGT | |
| 7 | 1/16–1/8 LATCH KEEPER SPACERS | 41818K | VINYL TECH./PGT | |
| 8 | JAMB BUMPER | 72087K | EASTCOAST RUBBER & PLASTIC Co. | SBR–007 |
| 9 | #6 x 5/16 SCREW PAN HD. PHIL. | 7PPBAA | MERCHANTS FASTENER CORP. | |
| 10 | .200x.187 JAMB WEATHERSTRIP–PILE | 62003K | SCHLEGEL CORP. | FS7819–187 |
| 11 | #5 x 1/2 SCREW PAN HD. PHIL. | 76X12A | MERCHANTS FASTENER CORP. | |
| 12 | HEADER DUST PLUG–HIGH PILE | 7P69GG | ULTRAFAB INC. | P6903G |
| 13 | SILL DUST PLUG–LOW PILE | 7P30GG | ULTRAFAB INC. | P3004G |
| 14 | HI–RISE SILL | 69371 | ALUMAX | AF–9371 |
| 15 | FIXED PANEL CLIPS | 41814 | VINYL TECH./PGT | |
| 16 | #8 x 3/4 Ph. Pn SMS | 7834A | SCHLEGEL CORP. | |
| 17 | FIXED PANEL CLIPS | 7LA13A | VINYL TECH./PGT | |
| 18 | #10 x 3/4 Ph. Pn. | 71034A | ULTRAFAB INC. | |
| 19 | FIXED PANEL CLIPS | 7LSL1A | VINYL TECH./PGT | |
| 20 | #10 x 1 1/2 Ph. Fl. SMS | 710112FPA | | |

**PRODUCT RENEWED**

ACCEPTANCE No. 01-0724.01

EXPIRATION DATE Dec 06, 2006

By Ishwar I. Chandc

PRODUCT CONTROL DIVISION
BUILDING CODE COMPLIANCE OFFICE

11/6/01

Robert L. Clark, P.E.
PE #39712
Structural

| | | | | | |
|---|---|---|---|---|---|
| Revisions: _ | | VINYL TECH Manufactures of Quality Vinyl Enclosures / progressive GLASS technology Manufacturers of Standard & Custom Glass Windows | | | |
| Material: | | Classification: | Prod. Category: SGD | Series/Model: 2500 | Item: ASS'Y. | Sheet: 2 of 6 |
| Drawn By: D.B. | Date: 3/18/98 | Description: 3–TRACK FRAME ASSEMBLY | | | |
| Revised By: F.K. | Date: 11/2/01 | | | | |
| Vendor No.: | Scale: N.T.S. | Address: P.O. BOX 1529 NOKOMIS, FL. 34274 | Size: B | Drawing No.: 742 | Rev.: D |

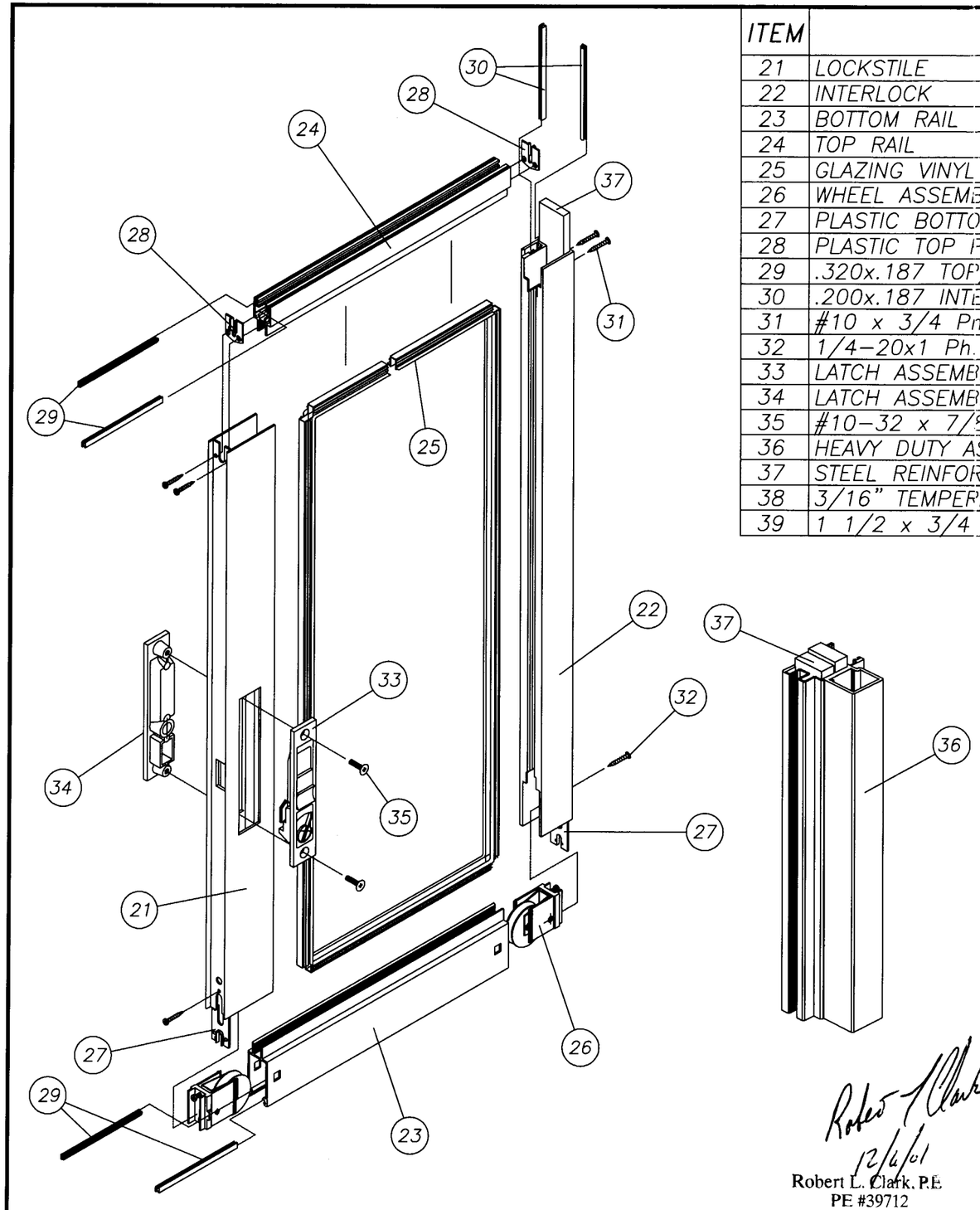


| ITEM | DESCRIPTION | V.T. # | VENDOR | VENDOR # |
|---|---|---|---|---|
| 21 | LOCKSTILE | 69362 | ALUMAX | AF-9362 |
| 22 | INTERLOCK | 69409 | ALUMAX | AF-9409 |
| 23 | BOTTOM RAIL | 68173 | ALUMAX | AF-8173 |
| 24 | TOP RAIL | 68172 | ALUMAX | AF-8172 |
| 25 | GLAZING VINYL - 3/16" | 6T304K | TEAM PLASTICS | VT304/B |
| 26 | WHEEL ASSEMBLY | 7S-24Z | NATIONWIDE INDUSTRIES | |
| 27 | PLASTIC BOTTOM PANEL GUIDE | 41802 | VINYL-TECH. / PGT | |
| 28 | PLASTIC TOP PANEL GUIDE | 41801 | VINYL-TECH. / PGT | |
| 29 | .320x.187 TOP/BOTTOM RAIL W'STRIP-PILE | 6FELTK | SCHLEGEL | FS7831-187 |
| 30 | .200x.187 INTERLOCK WEATHERSTRIP - PILE | 62003K | SCHLEGEL | FS7819-187 |
| 31 | #10 x 3/4 Pn. Ph. SMS | 71034A | MERCHANTS FASTENER | |
| 32 | 1/4-20x1 Ph. Pn. MS - S.S. | 720XIA | MERCHANTS FASTENER | |
| 33 | LATCH ASSEMBLY LOCK SIDE | 7LOCKK | NATIONWIDE INDUSTRIES | |
| 34 | LATCH ASSEMBLY DUMMY SIDE | 7DUMY | NATIONWIDE INDUSTRIES | |
| 35 | #10-32 x 7/8 Fl. Ph MS | 71078 | MERCHANTS FASTENER | |
| 36 | HEAVY DUTY ASTRAGAL | 69492 | ALUMAX | AF-9492 |
| 37 | STEEL REINFORCEMENT - 1/2" x 1 1/4" | | | |
| 38 | 3/16" TEMPERED | | PPG. LOF | |
| 39 | 1 1/2 x 3/4 ADHESIVE PILE PAD | | | |

NOTE:

1.) ITEM #22 WILL CHANGE TO ITEM #36 DEPENDING ON CONFIGURATION OF PANEL. CONFIGURATION IS OXXO.

2.) ITEM #37 USED ONLY WHEN STEEL REINFORCEMENT IS REQUIRED.

APPROVED AS COMPLYING WITH THE
SOUTH FLORIDA BUILDING CODE
DATE DEC 06, 2001
BY Ishaq I. Chanda
PRODUCT CONTROL DIVISION
BUILDING CODE COMPLIANCE OFFICE
ACCEPTANCE NO 01-0724.01

Robert L. Clark
12/6/01
Robert L. Clark, P.E
PE #39712
Structural

| | | | | | |
|---|---|---|---|---|---|
| Revisions: - | VINYL TECH Manufactures of Quality Vinyl Enclosures / progressive GLASS technology Manufactures of Standard & Custom Glass Windows | | | | |
| Material: | Classification: | Prod. Category: SGD | Series/Model: 2500 | Item: PANEL | Sheet: 3 of 6 |
| Drawn By: D.B. / Date: 3/18/98 | Description: SGD PANEL (2500) ASSY. | | | | |
| Revised By: F.K. / Date: 11/2/01 | | | | | |
| Vendor No.: / Scale: N.T.S. | Address: P.O. BOX 1529 NOKOMIS, FL. 34274 | Size: B | Drawing No.: 742 | Rev.: D | |

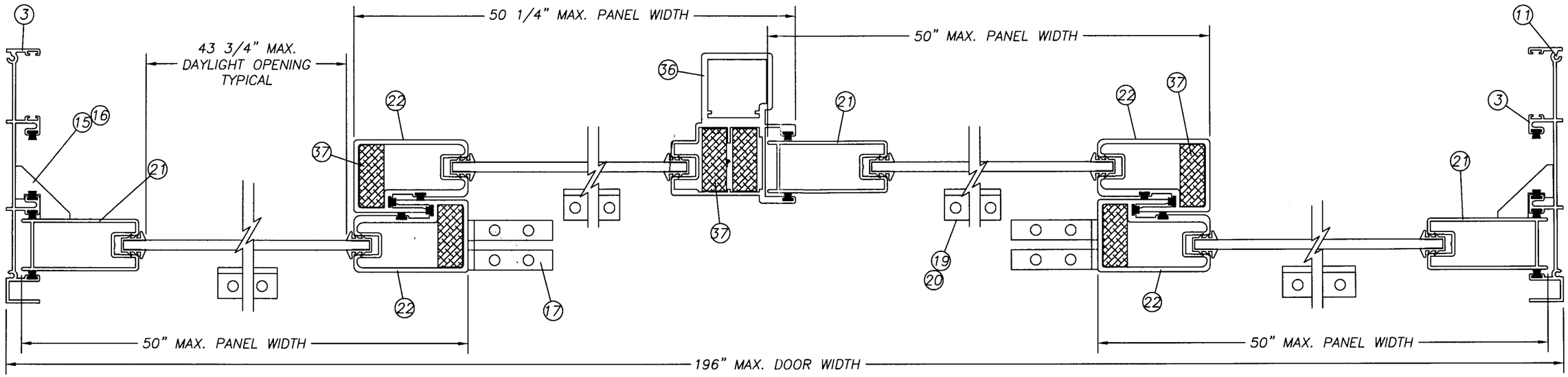


HORIZONTAL SECTION

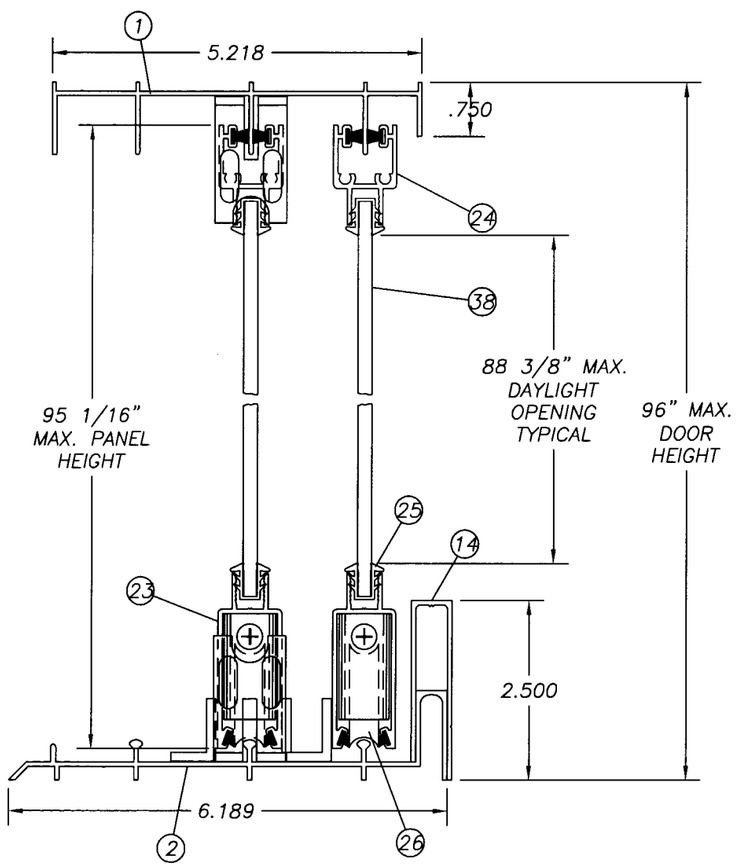


VERTICAL SECTION

**PRODUCT RENEWED**

ACCEPTANCE No. 01-0724.01

EXPIRATION DATE DEC 06, 2006

By Ishaq I. Chanda

PRODUCT CONTROL DIVISION
BUILDING CODE COMPLIANCE OFFICE

11/4/01

Robert L. Clark, P.E.
PE #39712
Structural

| | | | | | |
|---|---|---|---|---|---|
| Revisions: _ | | VINYL TECH — Manufacturers of Quality Vinyl Enclosures / progressive GLASS technology — Manufacturers of Standard & Custom Glass Windows | | | |
| Material: 6063-T5 | | Classification: | Prod. Category: SGD | Series/Model: 2500 | Item: SECT. / Sheet: 4 of 6 |
| Drawn By: D.B. | Date: 3/18/98 | Description: SGD 2500 W/STEEL REINFORCEMENT | | | |
| Revised By: F.K. | Date: 11/2/01 | | | | |
| Vendor No.: | Scale: .5X | Address: P.O. BOX 1529 NOKOMIS, FL. 34274 | Size: B | Drawing No.: 742 | Rev.: D |

Negative Design Loads based on Comparative Analysis (p.s.f.) and Glass Table ASTM E 1300–98

| Door Heights | Door Widths | | | | | | | | | | | |
|---|---|---|---|---|---|---|---|---|---|---|---|---|
| | 48.000 | 60.000 | 72.000 | 96.000 | 72.000 | 90.000 | 108.000 | 144.000 | 96.000 | 120.000 | 144.000 | 192.000 |
| 72.000 | 119.00 | 118.00 | 116.00 | 103.00 | 119.00 | 118.00 | 116.00 | 103.00 | 119.00 | 118.00 | 116.00 | 103.00 |
| 80.000 | 117.36 | 110.11 | 104.40 | 96.31 | 117.36 | 110.11 | 104.40 | 96.31 | 117.36 | 110.11 | 104.40 | 96.31 |
| 96.000 | 85.61 | 80.57 | 76.47 | 70.32 | 85.61 | 80.57 | 76.47 | 70.32 | 85.61 | 80.57 | 76.47 | 70.32 |
| | OX,XO or XX | | | | XOX, OXO or XXX | | | | OXXO or XXXX | | | |

Positive Design Loads based on Comparative Analysis (p.s.f.) and Water Test Pressure

| Door Heights | Door Widths | | | | | | | | | | | |
|---|---|---|---|---|---|---|---|---|---|---|---|---|
| | 48.000 | 60.000 | 72.000 | 96.000 | 72.000 | 90.000 | 108.000 | 144.000 | 96.000 | 120.000 | 144.000 | 192.000 |
| 72.000 | 78.00 | 78.00 | 78.00 | 78.00 | 78.00 | 78.00 | 78.00 | 78.00 | 78.00 | 78.00 | 78.00 | 78.00 |
| 80.000 | 78.00 | 78.00 | 78.00 | 78.00 | 78.00 | 78.00 | 78.00 | 78.00 | 78.00 | 78.00 | 78.00 | 78.00 |
| 96.000 | 78.00 | 78.00 | 76.47 | 70.32 | 78.00 | 78.00 | 76.47 | 70.32 | 78.00 | 78.00 | 76.47 | 70.32 |
| | OX,XO or XX | | | | XOX, OXO or XXX | | | | OXXO or XXXX | | | |

NOTES:

1.) REFERENCE: TEST FTL–1183
2.) DESIGN PRESSURE RATING:
SEE COMPARATIVE ANALYSIS TABLES
3.) SHUTTER REQUIREMENT:
MIAMI–DADE COUNTY APPROVED SHUTTERS ARE ARE REQUIRED AT ALL INSTALLATIONS.
4.) STEEL REINFORCEMENTS REQUIRED AT MEETING STILES AND INTERLOCKS.

PRODUCT RENEWED
ACCEPTANCE No. 01-0724.01
EXPIRATION DATE DEC 06, 2006
By Ishaq I. Chanda
PRODUCT CONTROL DIVISION
BUILDING CODE COMPLIANCE OFFICE

11/6/01
Robert L. Clark, P.E.
PE #39712
Structural

| | | | | | |
|---|---|---|---|---|---|
| Revisions: – DELETE 108" HT. | | VINYL–TECH Manufacturer of Quality Vinyl Enclosures / progressive GLASS technology Manufacturer of Standard & Custom Glass Windows | | | |
| Material: – | | Classification: – | Prod. Category: SGD | Series/Model: 2500 | Item: FTL–1183 | Sheet: 5 of 6 |
| Drawn By: D.B. | Date: 4/17/98 | Description: COMPARATIVE ANALYSIS | | | |
| Revised By: F.K. | Date: 11/2/01 | | | | |
| Vendor No.: | Scale: 1X | Address: P.O. BOX 1529 NOKOMIS, FL. 34274 | Size: B | Drawing No.: 742 | Rev.: D |

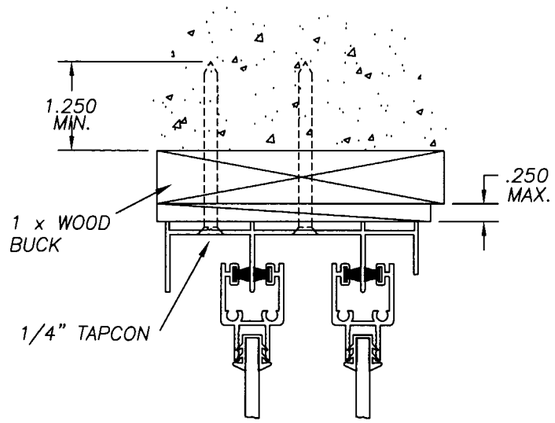


TYP. HEAD

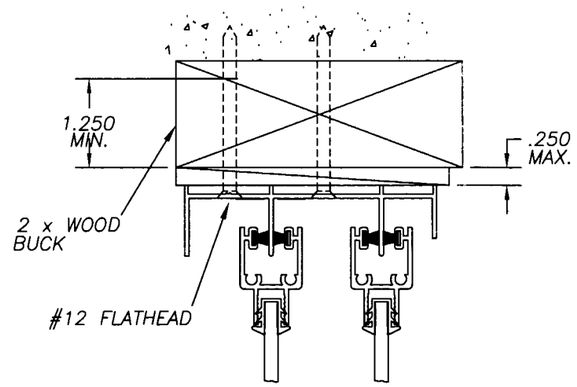


TYP. HEAD

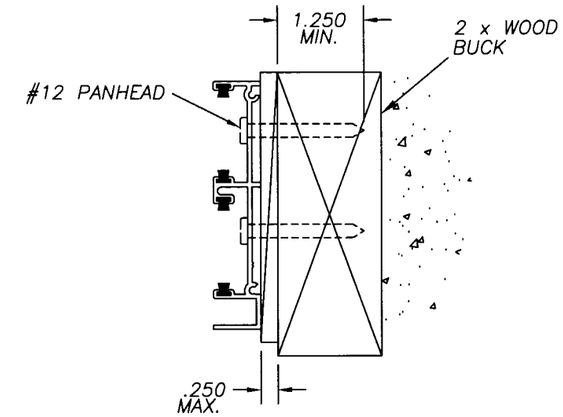


TYP. JAMB

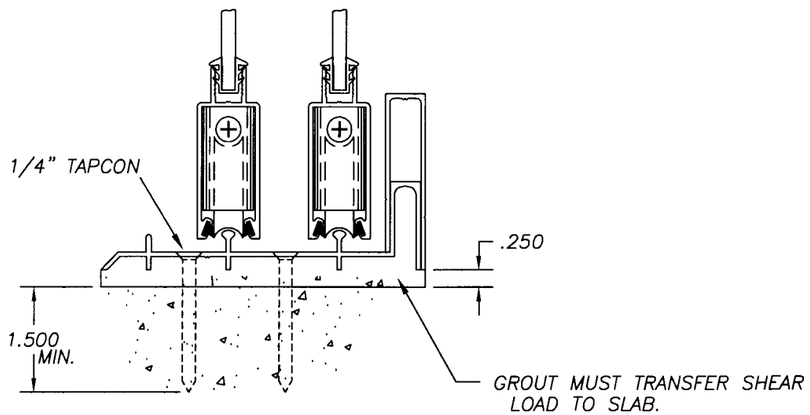


TYP. SILL

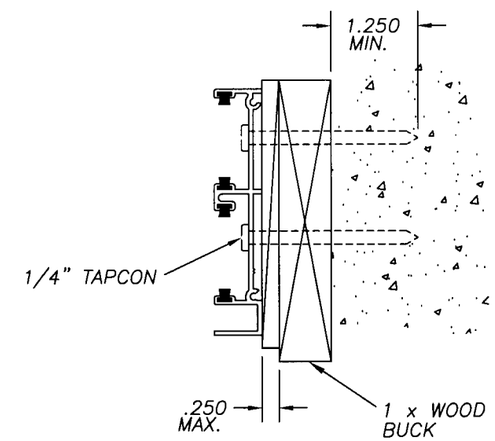


TYP. JAMB

**PRODUCT RENEWED**

ACCEPTANCE No. 01-0724.01

EXPIRATION DATE DECEMBER 06, 2006

By Ishaq I. Chanda

PRODUCT CONTROL DIVISION
BUILDING CODE COMPLIANCE OFFICE

Robert L. Clark, P.E.
PE #39712
Structural

| | | | | | |
|---|---|---|---|---|---|
| Revisions: – | VINYL TECH (Manufacturer of Quality Vinyl Enclosures) / progressive GLASS technology (Manufacturer of Standard & Custom Glass Windows) | | | | |
| Material: | Classification: | Prod. Category: SGD | Series/Model: 2500 | Item: ANCH. | Sheet: 6 of 6 |
| Drawn By: D.B. / Date: 3/18/98 | Description: TYPICAL ANCHORAGE DETAIL | | | | |
| Revised By: F.K. / Date: 11/2/01 | | | | | |
| Vendor No.: / Scale: N.T.S. | Address: P.O. BOX 1529 NOKOMIS, FL. 34274 | Size: B | Drawing No.: 742 | Rev.: D | |