MIAMI-DADE

MIAMI-DADE COUNTY, FLORIDA
METRO-DADE FLAGLER BUILDING

BUILDING CODE COMPLIANCE OFFICE
METRO-DADE FLAGLER BUILDING
140 WEST FLAGLER STREET, SUITE 1603
MIAMI, FLORIDA 33130-1563
(305) 375-2901 FAX (305) 375-2908

CONTRACTOR LICENSING SECTION
(305) 375-2527 FAX (305) 375-2558

CONTRACTOR ENFORCEMENT DIVISION
(305) 375-2966 FAX (305) 375-2908

PRODUCT CONTROL DIVISION
(305) 375-2902 FAX (305) 372-6339

PRODUCT CONTROL NOTICE OF ACCEPTANCE

KML Windows, Inc.
23 Buchanan Court
London ,On N5Z 4P9

Your application for Notice of Acceptance (NOA) of:
Extruded Aluminum Plate Clipped Mullion - Impact
under Chapter 8 of the Code of Miami-Dade County governing the use of Alternate Materials and Types of Construction, and completely described herein, has been recommended for acceptance by the Miami-Dade County Building Code Compliance Office (BCCO) under the conditions specified herein.

This NOA shall not be valid after the expiration date stated below. BCCO reserves the right to secure this product or material at any time from a jobsite or manufacturer's plant for quality control testing. If this product or material fails to perform in the approved manner, BCCO may revoke, modify, or suspend the use of such product or material immediately. BCCO reserves the right to revoke this approval, if it is determined by BCCO that this product or material fails to meet the requirements of the South Florida Building Code.

The expense of such testing will be incurred by the manufacturer.

ACCEPTANCE NO.: 01-0724.07
EXPIRES: 08/23/2006

Raul Rodriguez
Chief Product Control Division

THIS IS THE COVERSHEET, SEE ADDITIONAL PAGES FOR SPECIFIC AND GENERAL CONDITIONS
BUILDING CODE & PRODUCT REVIEW COMMITTEE

This application for Product Approval has been reviewed by the BCCO and approved by the Building Code and Product Review Committee to be used in Miami-Dade County, Florida under the conditions set forth above.

Francisco J. Quintana, R.A.
Director
Miami-Dade County
Building Code Compliance Office

APPROVED: 08/23/2001

KML Windows, Inc.

ACCEPTANCE No.: 01-0724.07

APPROVED : AUG 2 3 2001

EXPIRES : AUG 2 3 2006

NOTICE OF ACCEPTANCE: SPECIFIC CONDITIONS

1. SCOPE

1.1 This approves a clipped mullion system, as described in Section 2 of this Notice of Acceptance, designed to comply with the South Florida Building Code (SFBC), 1994 Edition for Miami-Dade County, for the locations where the pressure requirements, as determined by SFBC Chapter 23, do not exceed the Design Pressure Rating values indicated in the approved drawings.

2. PRODUCT DESCRIPTION

2.1 The **Extruded Aluminum Plate Clipped Mullion - Impact** is a structural member used for top-and-bottom and side-by-side installation. Mullion and its components shall be constructed in strict compliance with the following documents: Drawing No **1003F**, Sheets 1 through 5 of 5, titled "Clipped Impact & Non-Impact Extruded Plate Mullions", prepared by W. W. Schaefer Engineering & Consulting, P. A., dated 10/13/00 signed and sealed by Warren W. Schaefer, P.E., bearing the Miami-Dade County Product Control approval stamp; with the Notice of Acceptance number and approval date by the Miami-Dade County Product Control Division. These documents shall hereinafter be referred to as the approved drawings.

3. LIMITATIONS

3.1 This approval applies to structural mullions to be installed vertically or horizontally, as shown in the approved drawings.

3.2 This approval applies only to Impact & Non-Impact French Doors, Casement Windows, Sash Glazed Fixed Windows and Direct Glazed Fixed Windows, manufactured by ***KML Windows, Inc.*** with a current Notice of Acceptance, installed as shown in approved drawings.

3.3 Window sizes and design pressures are to be limited only to those appearing on charts and also listed in the individual window's Notice of Acceptance.

4. INSTALLATION

4.1 The clipped mullion system and its components shall be installed in strict compliance with the approved drawings.

4.2 This mullion **can** be installed as part of an impact resistant unit.

5. LABELING

5.1 Each unit shall bear a permanent label with the manufacturer's name or logo, city, state and following statement: "Miami-Dade County Product Control Approved".

6. BUILDING PERMIT REQUIREMENTS

6.1 Application for building permit shall be accompanied by copies of the following:

- **6.1.1** This Notice of Acceptance, with mullion option indicated.
- **6.1.2** The Notice of Acceptance of each door and/or fixed lite attached to mullion.
- **6.1.3** Duplicate copies of the approved drawings, as identified in Section 2 of this Notice of Acceptance, clearly marked to show the components selected for the proposed installation.
- **6.1.4** Any other documents required by the Building Official or the South Florida Building Code (SFBC) in order to properly evaluate the installation of this system.

Manuel Perez

Manuel Perez, P.E. Product Control Examiner
Product Control Division

KML Windows, Inc.

ACCEPTANCE No.: 00-1129.03

APPROVED : AUG 2 3 2001

EXPIRES : AUG 2 3 2006

NOTICE OF ACCEPTANCE: STANDARD CONDITIONS

1. Renewal of this Acceptance (approval) shall be considered after a renewal application has been filed and the original submitted documentation, including test supporting data, engineering documents, are no older than eight (8) years.

2. Any and all approved products shall be permanently labeled with the manufacturer's name, city, state, and the following statement: "Miami-Dade County Product Control Approved", or as specifically stated in the specific conditions of this Acceptance.

3. Renewals of Acceptance will not be considered if:
   - **a.** There has been a change in the South Florida Building Code affecting the evaluation of this product and the product is not in compliance with the code changes.
   - **b.** The product is no longer the same product (identical) as the one originally approved.
   - **c.** If the Acceptance holder has not complied with all the requirements of this acceptance, including the correct installation of the product.
   - **d.** The engineer who originally prepared, signed and sealed the required documentation initially submitted, is no longer practicing the engineering profession.

4. Any revision or change in the materials, use, and/or manufacture of the product or process shall automatically be cause for termination of this Acceptance, unless prior written approval has been requested (through the filing of a revision application with appropriate fee) and granted by this office.

5. Any of the following shall also be grounds for removal of this Acceptance:
   - **a.** Unsatisfactory performance of this product or process.
   - **b.** Misuse of this Acceptance as an endorsement of any product, for sales, advertising or any other purposes.

6. The Notice of Acceptance number preceded by the words Miami-Dade County, Florida, and followed by the expiration date may be displayed in advertising literature. If any portion of the Notice of Acceptance is displayed, then it shall be done in its entirety.

7. A copy of this Acceptance as well as approved drawings and other documents, where it applies, shall be provided to the user by the manufacturer or its distributors and shall be available for inspection at the job site at all time. The engineer needs not reseal the copies.

8. Failure to comply with any section of this Acceptance shall be cause for termination and removal of Acceptance.

9. This Notice of Acceptance consists of pages 1, 2 and this last page 3.

END OF THIS ACCEPTANCE

Manuel Perez

Manuel Perez, P.E., Product Control Examiner
Product Control Division

KML Windows, Inc.

ACCEPTANCE No.: **00-1129.03**

APPROVED : AUG 2 3 2001

EXPIRES : AUG 2 3 2006

NOTICE OF ACCEPTANCE: EVIDENCE SUBMITTED
(For File ONLY. Not part of NOA.)

A. DRAWINGS

1. Manufacturer's die drawings and sections.
2. Drawing No **1003F**, Sheets 1 through 5 of 5, titled "Clipped Impact & Non-Impact Extruded Plate Mullions", prepared by W. W. Schaefer Engineering & Consulting, P. A., dated 10/13/00 signed and sealed by Warren W. Schaefer, P.E.

B. TESTS

1. Test reports on 1) Air Infiltration Test, per SFBC, PA 202-94
   2) Uniform Load Static Air Pressure Test, per SFBC, PA 202-94
   3) Water Resistance Test, per SFBC, PA 202-94
   4) Large Missile Impact Test, SFBC PA 201-94
   5) Cyclic Loading Test, per SFBC PA 203-94

   along with installation diagram of two fixed window mulled units, prepared by Intertek Testing Services, Test Report No. **ITS J99022770-231-09**, dated 10/31/00, signed and sealed by Douglas Keith Tucker, P.E.

C. CALCULATIONS

1. Engineering Structural & Anchor Calculations, prepared by W. W. Schaefer, Engineering & Consulting, P.A. dated 10/17/00, signed and sealed by Warren W. Schaefer, P.E.

D. MATERIAL CERTIFICATIONS

1. None.

E. STATEMENTS

1. Statement letter of conformance, dated October 19, 2000, signed and sealed by Warren W. Schaefer, P.E.
2. Statement letter of no financial interest, dated October 19, 2000, signed and sealed by Warren W. Schaefer, P.E.

F. OTHER

1. None.

Manuel Perez, P.E. Product Control Examiner
Product Control Division

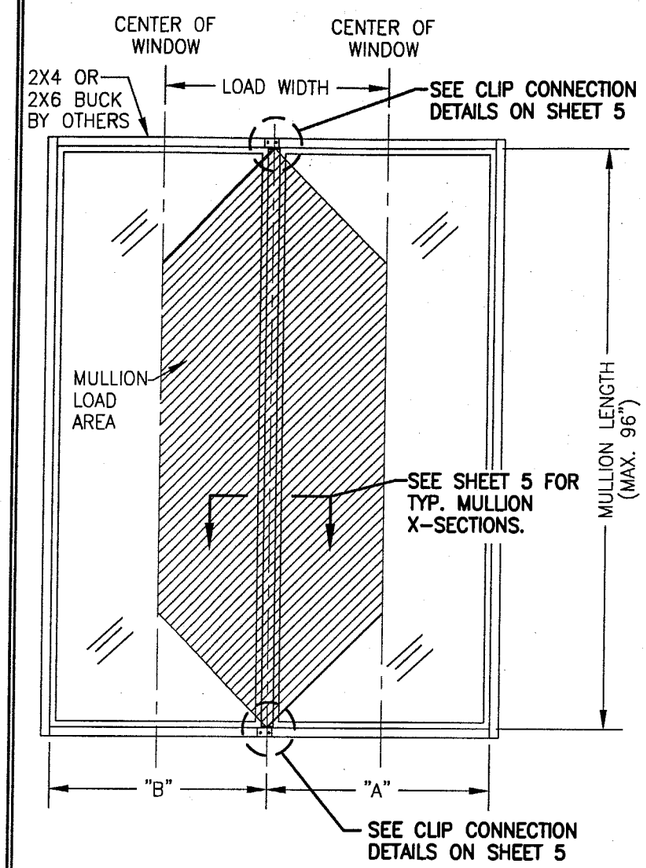

FIXED WINDOW TO FIXED WINDOW

LOAD WIDTH = (A + B)/2

NOTE: "FIXED WINDOW" MAY BE A SASH GLAZED FIXED OR A DIRECT GLAZED FIXED WINDOW.

NOTE: MULLION MAY BE HORIZONTAL OR VERTICAL

FIXED WINDOW TO FIXED WINDOW TABLE

LENGTH (IN.)	LOAD WIDTH (IN.)	ALLOWABLE PRESSURES (PSF) MULLION "D" POS	NEG
60	24	100.0	100.0
	30	100.0	100.0
	36	100.0	100.0
	42	100.0	100.0
	48	100.0	100.0
	54	97.3	100.0
	60	87.6	99.6
	66	87.6	99.6
	72	87.6	99.6
72	24	100.0	100.0
	30	100.0	100.0
	36	95.3	100.0
	42	86.5	98.8
	48	76.0	86.4
	54	67.6	76.8
	60	60.8	69.1
	66	55.3	62.8
	72	50.7	57.6
84	24	100.0	100.0
	30	89.3	100.0
	36	74.5	84.7
	42	63.8	72.6
	48	55.8	63.5
	54	49.6	56.4
	60	44.7	50.8
	66	40.6	46.2
	72	37.2	42.3
96	24	85.5	97.2
	30	68.4	77.8
	36	57.0	64.8
	42	48.9	55.6
	48	42.8	48.6
	54	38.0	43.2
	60	34.2	38.9
	66	31.1	35.4
	72	28.5	32.4

NOTE: INDIVIDUAL UNIT SIZES ARE LIMITED BY THEIR OWN INDIVIDUAL "NOTICE OF ACCEPTANCE"

MULLION "D" = EXTRUDED ALUMINUM PLATE

GENERAL NOTES (ALL DRAWING SHEETS):

1. DOORS ARE APPROVED UNDER SEPERATE N.O.A. WITH THE EXTRUDED PLATE MULLION "D" AS AN UN-CLIPPED MULLION. CASEMENT WINDOWS & SASH GLAZED FIXED WINDOWS ARE APPROVED UNDER SEPERATE N.O.A. WITH AN UNREINFORCED JAMB TO JAMB MULLION. SEE THE PRODUCTS SPECIFIC N.O.A. FOR USE OF THESE MULLIONS WHEN THEY APPLY.
2. THESE MULLION SYSTEMS HAVE BEEN TESTED, ANALYZED AND APPROVED FOR DESIGN PRESSURES NOT TO EXCEED THOSE SHOWN ON THESE DRAWINGS.
3. BUCKING, OPENINGS & BUCKING FASTENERS MUST BE DESIGNED & INSTALLED TO WITHSTAND WIND LOADS AS DETERMINED FOR EA. APPLICATION
4. ALL HARDWARE & FASTENERS SHALL BE IN ACCORDANCE WITH THESE DRAWINGS & MAY NOT VARY UNLESS SPECIFICALLY MENTIONED ON THE DRAWINGS.
5. THESE MULLION SYSTEMS HAVE BEEN DESIGNED IN ACCORDANCE WITH THE SOUTH FLORIDA BUILDING CODE, 1994 EDITION.
6. THIS PRODUCT HAS BEEN TESTED IN ACCORDANCE WITH DADE COUNTY PROTOCOLS PA-201, PA-202 & PA-203 FOR LARGE MISSILE IMPACT, STRUCTURAL & CYCLIC TESTING.
7. PRODUCTS APPROVED WITH THESE MULLIONS ARE:
   a) IMPACT & NON-IMPACT FRENCH DOORS
   b) IMPACT & NON-IMPACT CASEMENT WINDOWS
   c) IMPACT & NON-IMPACT SASH GLAZED FIXED WINDOWS
   d) IMPACT & NON-IMPACT DIRECT GLAZED FIXED WINDOWS

   ALL PRODUCTS APPROVED WITH THESE MULLIONS MUST HAVE A MIN. 0.81" X 4.562" WOOD JAMB WITH MINIMUM WOOD PROPERTIES BEING EQUAL TO THAT OF PONDEROSA PINE. ALSO, PRODUCTS USED WITH THESE MULLIONS MUST HOLD A DADE COUNTY "NOTICE OF ACCEPTANCE" (N.O.A.).
8. ALL BUCKING MUST BE RIPPED TO FIT DEPTH REQUIRED BY THE MULLION END CLIPS. (SEE DETAILS ON SHEET 6)
9. ALLOWABLE PRESSURE ON THE MULLED UNIT SHALL BE CONTROLLED BY THE LESSER ALLOWABLE PRESSURE OF THE MULLION OR THE INDIVIDUAL DOOR/WINDOW UNITS.
10. FOR WINDOW OR DOOR FRAME TO BUCK ATTACHMENT, SEE THE RESPECTIVE PRODUCT APPROVAL DRAWINGS FOR THE WINDOW/DOOR.
11. MULLION LENGTHS ARE RESTRICTED BY THOSE SHOWN IN THE TABLES.

APPROVED AS COMPLYING WITH THE SOUTH FLORIDA BUILDING CODE
DATE AUG 23 2001
BY Manuel Perez
PRODUCT CONTROL DIVISION
BUILDING CODE COMPLIANCE OFFICE
ACCEPTANCE NO. 01-0724.07

DRAWN BY: W.W.S.	CHECKED BY: W.W.S.
PLOT: 1=24	DATE: 10/13/00

NO.	REVISION DESCRIPTION	BY	DATE

DRAWING TITLE
CLIPPED IMPACT & NON-IMPACT EXTRUDED PLATE MULLIONS

MANUFACTURER
KML WINDOWS, INC.
23 BUCHANAN COURT
LONDON, ONTARIO, CANADA N5Z4P9
519-681-7012

CONSULTANTS
W. W. SCHAEFER ENGINEERING & CONSULTING, P.A.
600 SANDTREE DRIVE, SUITE 203B
PALM BEACH GARDENS, FL 33403
PHONE: 561-775-4902 FAX: 561-775-4903

CERTIFICATION
JUL 17 2001
WARREN W. SCHAEFER, P.E.
P.E. NO. 44135

DRAWING NO. 1003F
REV.
SHEET NO. 1 OF 5

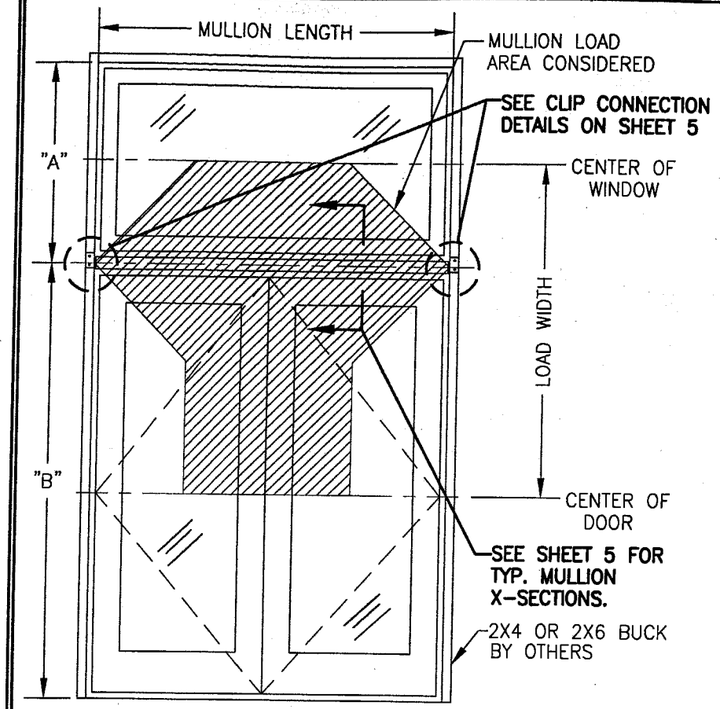

DOUBLE DOOR WITH TRANSOM

LOAD WIDTH = (A + B)/2

NOTE: "TRANSOM" MAY BE A SASH GLAZED FIXED WINDOW, DIRECT GLAZED FIXED WINDOW OR A FIXED DOOR PANEL.

DOUBLE DOOR WITH TRANSOM

LENGTH (IN.)	LOAD WIDTH (IN.)	ALLOWABLE PRESSURE (PSF) MULLION "D" POS	NEG
48	48	100.0	100.0
	54	100.0	100.0
	60	91.9	100.0
	66	83.5	95.5
	72	76.6	87.5
54	48	100.0	100.0
	54	90.7	100.0
	60	81.7	93.3
	66	74.2	84.8
	72	68.1	77.8
60	48	91.9	100.0
	54	81.7	93.3
	60	73.5	84.0
	66	66.8	76.4
	72	61.3	70.0
	78	56.5	64.6
66	48	83.5	95.5
	54	74.2	84.8
	60	66.8	76.4
	66	60.7	69.4
	72	55.7	63.6
	78	51.4	58.7
72	48	76.0	86.4
	54	67.6	76.8
	60	60.8	69.1
	66	55.3	62.8
	72	50.7	57.6
	78	46.8	53.2
	84	43.4	49.4
78	48	64.8	73.6
	54	57.6	65.5
	60	51.8	58.9
	66	47.1	53.6
	72	43.2	49.1
	78	39.9	45.3
	84	37.0	42.1
84	48	55.8	63.5
	54	49.6	56.4
	60	44.7	50.8
	66	40.6	46.2
	72	37.2	42.3
	78	34.4	39.1
	84	31.9	36.3

MULLION "D" = EXTRUDED ALUMINUM PLATE

NOTE: INDIVIDUAL UNIT SIZES ARE LIMITED BY THEIR OWN INDIVIDUAL "NOTICE OF ACCEPTANCE"

APPROVED AS COMPLYING WITH THE SOUTH FLORIDA BUILDING CODE
DATE AUG 23 2001
BY Manuel Perez
PRODUCT CONTROL DIVISION
BUILDING CODE COMPLIANCE OFFICE
ACCEPTANCE NO. 01-0724.07

DRAWN BY: W.W.S.	CHECKED BY: W.W.S.
PLOT: 1=24	DATE: 10/13/00

NO.	REVISION DESCRIPTION	BY	DATE

DRAWING TITLE
CLIPPED IMPACT & NON-IMPACT EXTRUDED PLATE MULLIONS

MANUFACTURER
KML WINDOWS, INC.
23 BUCHANAN COURT
LONDON, ONTARIO, CANADA N5Z4P9
519-681-7012

CONSULTANTS
W. W. SCHAEFER ENGINEERING & CONSULTING, P.A.
600 SANDTREE DRIVE; SUITE 203B
PALM BEACH GARDENS, FL 33403
PHONE: 561-775-4902 FAX: 561-775-4903

CERTIFICATION
JUL 17 2001
WARREN W. SCHAEFER, P.E.
P.E. NO. 44135

DRAWING NO. 1003F
REV.
SHEET NO. 2 OF 5

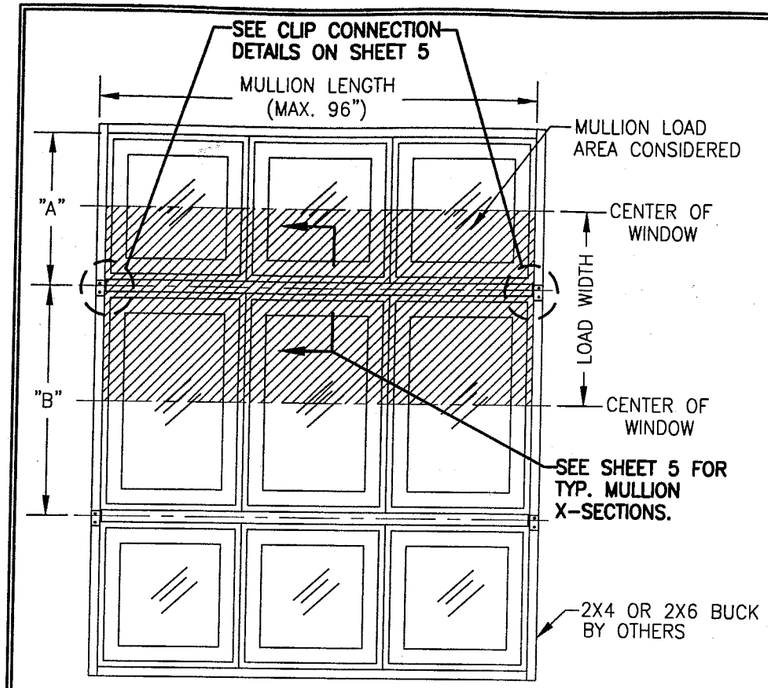

MULTIPLE WINDOWS (HORIZONTAL MULLION)

LOAD WIDTH = (A + B)/2

MULLIONS MAY BE HORIZONTAL OR VERTICAL

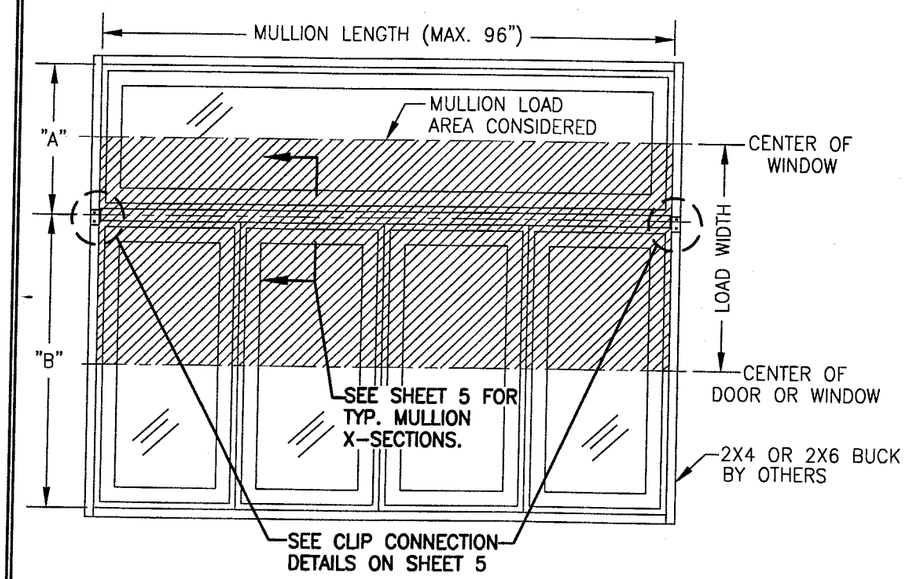

MULTIPLE WINDOWS/DOORS WITH TRANSOM

LOAD WIDTH = (A + B)/2

TRANSOM MAY BE SINGLE OR MULTIPLE WINDOWS

NOTE: INDIVIDUAL UNIT SIZES ARE LIMITED BY THEIR OWN INDIVIDUAL "NOTICE OF ACCEPTANCE"

MULTIPLE WINDOWS/DOORS

LENGTH (IN.)	LOAD WIDTH (IN.)	ALLOWABLE PRESSURES (PSF) MULLION "D" POS	NEG
36	48	100.0	100.0
	54	95.3	100.0
	60	85.8	98.0
	66	78.0	89.1
	72	71.5	81.7
	78	66.0	75.4
48	36	100.0	100.0
	42	91.9	100.0
	48	80.4	91.9
	54	71.5	81.7
	60	64.3	73.5
	66	58.5	66.8
	72	53.6	61.3
	78	49.5	56.5
60	30	100.0	100.0
	36	85.8	98.0
	42	73.5	84.0
	48	64.3	73.5
	54	57.2	65.3
	60	51.5	58.8
	66	46.8	53.5
	72	42.9	49.0
	78	39.6	45.2
72	24	93.3	93.3
	30	74.6	74.6
	36	62.2	62.2
	42	53.3	53.3
	48	46.7	46.7
	54	41.5	41.5
	60	37.3	37.3
	66	33.9	33.9
	72	31.1	31.1
	78	28.7	28.7
84	24	58.8	58.8
	30	47.0	47.0
	36	39.2	39.2
	42	33.6	33.6
	48	29.4	29.4
	54	26.1	26.1
	60	–	–
	66	–	–
	72	–	–
	78	–	–
96	24	39.4	39.4
	30	31.5	31.5
	36	26.2	26.2
	42	–	–
	48	–	–
	54	–	–
	60	–	–
	66	–	–
	72	–	–
	78	–	–

MULLION "D" = EXTRUDED ALUMINUM PLATE

APPROVED AS COMPLYING WITH THE SOUTH FLORIDA BUILDING CODE
DATE AUG 23 2001
BY [signature]
PRODUCT CONTROL DIVISION
BUILDING CODE COMPLIANCE OFFICE
ACCEPTANCE NO. 01-0724.07

DRAWN BY: W.W.S.	CHECKED BY: W.W.S.
PLOT: 1=24	DATE: 10/13/00

NO.	REVISION DESCRIPTION	BY	DATE

DRAWING TITLE: CLIPPED IMPACT & NON-IMPACT EXTRUDED PLATE MULLIONS

MANUFACTURER: KML WINDOWS, INC.
23 BUCHANAN COURT
LONDON, ONTARIO, CANADA N5Z4P9
519-681-7012

CONSULTANTS: W. W. SCHAEFER ENGINEERING & CONSULTING, P.A.
600 SANDTREE DRIVE; SUITE 203B
PALM BEACH GARDENS, FL 33403
PHONE: 561-775-4902 FAX: 561-775-4903

CERTIFICATION
JUL 17 2001
WARREN W. SCHAEFER, P.E.
P.E. NO. 44135

DRAWING NO. 1003F
REV.
SHEET NO. 3 OF 5

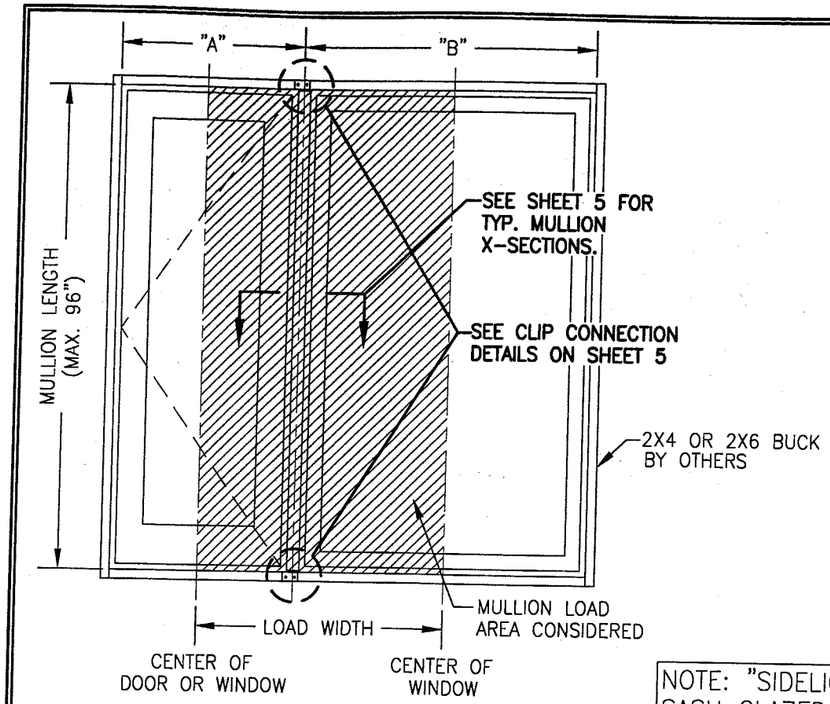

SINGLE DOOR OR CASEMENT WITH SIDELIGHT

LOAD WIDTH = (A + B)/2

NOTE: "SIDELIGHT" MAY BE A SASH GLAZED FIXED WINDOW, A DIRECT GLAZED FIXED WINDOW, OR A FIXED DOOR PANEL.

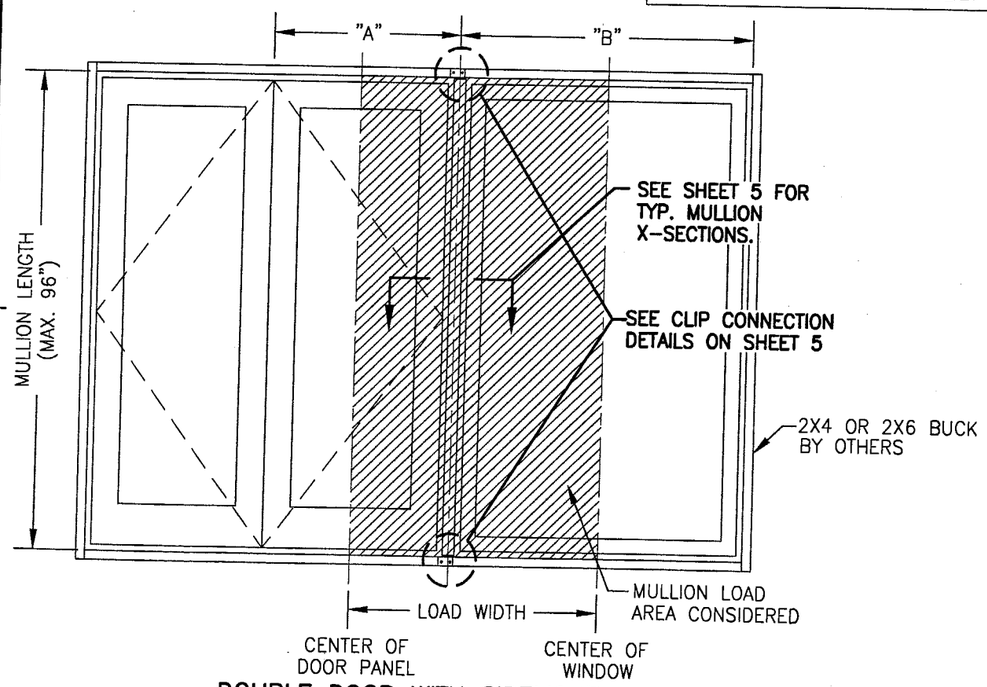

DOUBLE DOOR WITH SIDELIGHT

LOAD WIDTH = (A + B)/2

DOOR WITH SIDELIGHT

LENGTH (IN.)	LOAD WIDTH (IN.)	ALLOWABLE PRESSURE (PSF) MULLION "D" POS	NEG
48	36	100.0	100.0
	42	91.9	100.0
	48	80.4	91.9
	54	71.5	81.7
	60	64.3	73.5
54	30	100.0	100.0
	36	95.3	100.0
	42	81.7	93.3
	48	71.5	81.7
	54	63.5	72.6
	60	57.2	65.3
60	30	100.0	100.0
	36	85.8	98.0
	42	73.5	84.0
	48	64.3	73.5
	54	57.2	65.3
	60	51.5	58.8
66	24	100.0	100.0
	30	93.5	100.0
	36	78.0	89.1
	42	66.8	76.4
	48	58.5	66.8
	54	52.0	59.4
	60	46.8	53.5
72	24	100.0	100.0
	30	85.8	98.0
	36	71.5	81.7
	42	61.3	70.0
	48	53.6	61.3
	54	47.6	54.4
	60	42.9	49.0
78	24	98.9	100.0
	30	79.2	90.5
	36	66.0	75.4
	42	56.5	64.6
	48	49.5	56.5
	54	44.0	50.3
	60	39.6	45.2
80	24	96.5	100.0
	30	77.2	88.2
	36	64.3	73.5
	42	55.1	63.0
	48	48.2	55.1
	54	42.9	49.0
	60	38.6	44.1

DOOR WITH SIDELIGHT

LENGTH (IN.)	LOAD WIDTH (IN.)	ALLOWABLE PRESSURE (PSF) MULLION "D" POS	NEG
84	24	91.9	100.0
	30	73.5	84.0
	36	61.3	70.0
	42	52.5	60.0
	48	45.9	52.5
	54	40.8	46.7
	60	36.8	42.0
96	24	80.4	91.9
	30	64.3	73.5
	36	53.6	61.3
	42	45.9	52.5
	48	40.2	45.9
	54	35.7	40.8
	60	32.2	36.8

MULLION "D" = EXTRUDED ALUMINUM PLATE

NOTE: INDIVIDUAL UNIT SIZES ARE LIMITED BY THEIR OWN INDIVIDUAL "NOTICE OF ACCEPTANCE"

APPROVED AS COMPLYING WITH THE SOUTH FLORIDA BUILDING CODE
DATE AUG 23 2001
BY [signature]
PRODUCT CONTROL DIVISION
BUILDING CODE COMPLIANCE OFFICE
ACCEPTANCE NO. 01-0724.07

DRAWN BY: W.W.S.	CHECKED BY: W.W.S.
PLOT: 1=24	DATE: 10/13/00

NO.	REVISION DESCRIPTION	BY	DATE

DRAWING TITLE
CLIPPED IMPACT & NON-IMPACT EXTRUDED PLATE MULLIONS

MANUFACTURER
KML WINDOWS, INC.
23 BUCHANAN COURT
LONDON, ONTARIO, CANADA N5Z4P9
519-681-7012

CONSULTANTS
W. W. SCHAEFER ENGINEERING & CONSULTING, P.A.
600 SANDTREE DRIVE; SUITE 203B
PALM BEACH GARDENS, FL 33403
PHONE: 561-775-4902 FAX: 561-775-4903

CERTIFICATION
JUL 17 2001
WARREN W. SCHAEFER, P.E.
P.E. NO. 44135

DRAWING NO. 1003F
REV.
SHEET NO. 4 OF 5

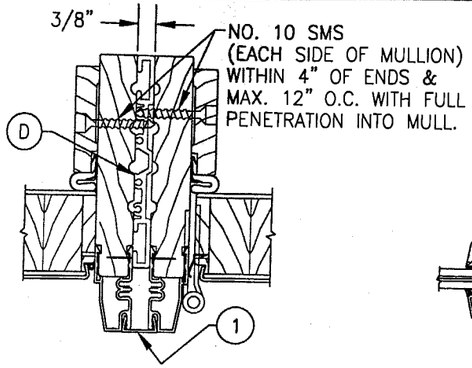

DOOR MULLIONS

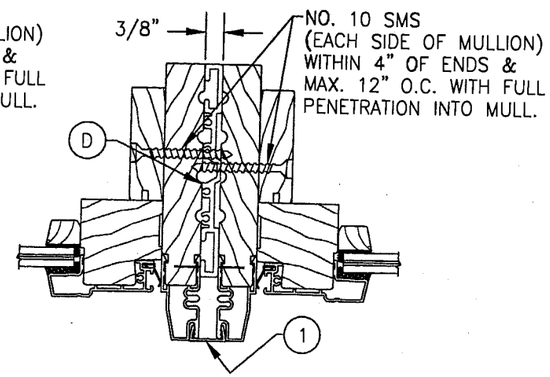

SASH GLAZED FIXED WINDOW MULLIONS

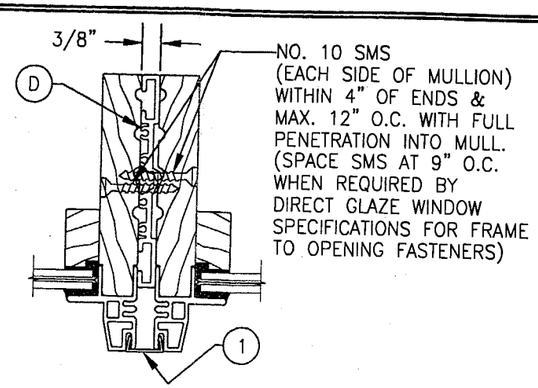

DIRECT GLAZED WINDOW MULLIONS

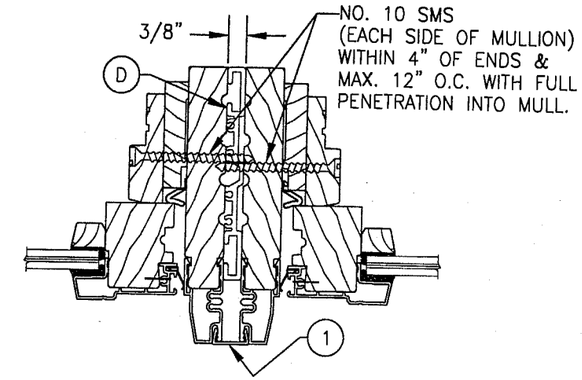

CASEMENT WINDOW MULLIONS

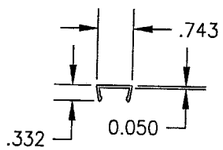

(1) MULLION CAP
6063-T5 ALUMINUM

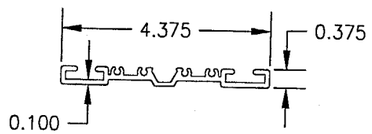

(D) EXTRUDED PLATE MULLION
6005-T5 ALUMINUM

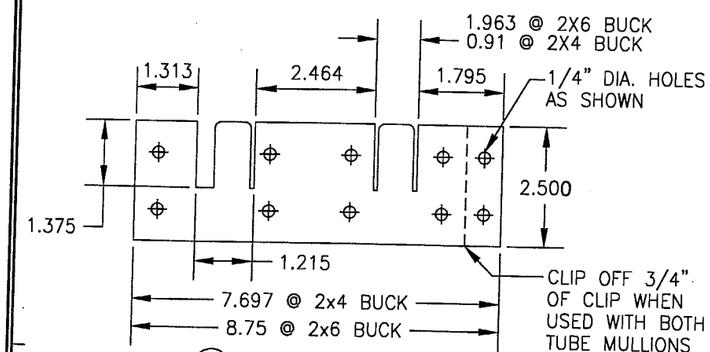

(2) MULLION END CLIP
A36 MIN. GALV. STEEL
THICKNESS = 12 GAGE

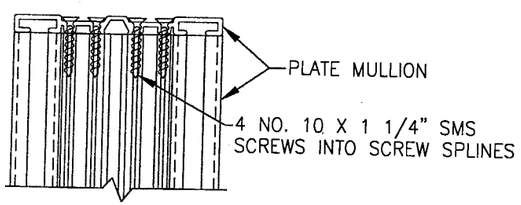

MULLION END CONNECTION DETAIL
PLATE TO PLATE CONNECTION

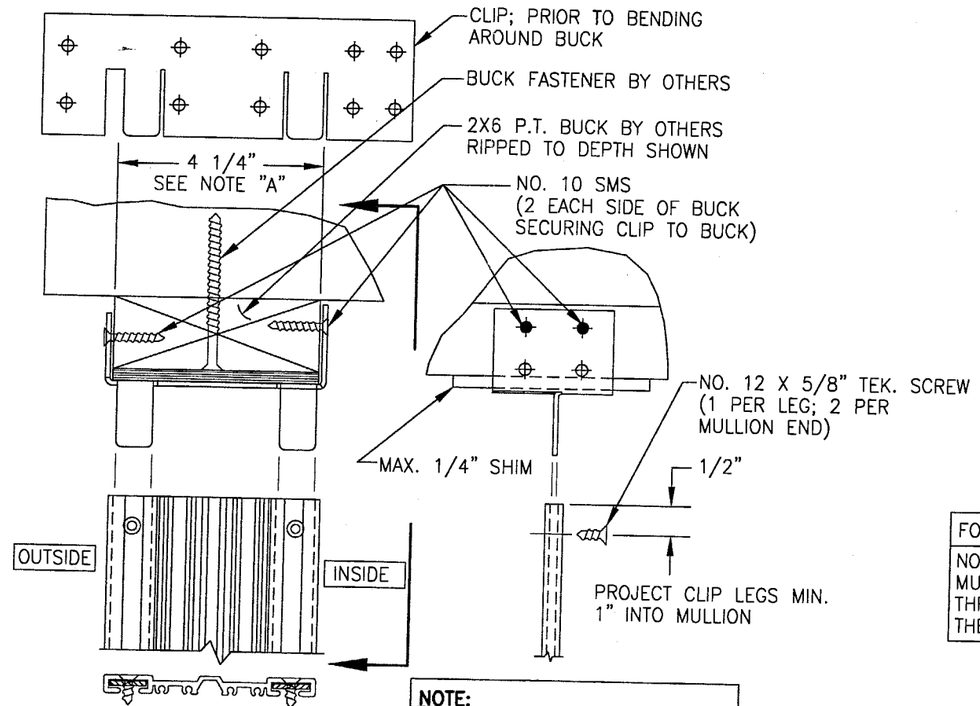

MULLION END CONNECTION DETAIL
TYP. WITH EXTRUDED PLATE MULLION "D"

NOTE: THIS CONNECTION IS ALSO APPLICABLE FOR A PLATE TO TUBE CONNECTION EXCEPT THAT THE NO. 10 SMS INTO THE BUCK SHALL BE NO. 10 TEK SCREWS INTO THE TUBE.

NOTE:
PREBEND EXTERIOR SIDE OF CLIP IN SHOP. FIELD BEND INTERIOR SIDE OF CLIP TO WRAP BUCK.

NOTE "A":
WHEN CLIP IS USED WITH THE EXTRUDED PLATE, THE 7.697" LONG CLIP MAY BE USED WITH A 2X6 BUCK RIPPED DOWN TO 4 1/4" OR THE 8.75" LONG CLIP MAY BE USED WITH A FULL 2X6 BUCK.

NOTE:
ANY ADDITIONAL FASTENERS REQUIRED BY THE INDIVIDUAL DOOR OR WINDOW N.O.A. (EX: STRIKE OR HINGE FASTENERS TO BUCK) SHALL BE REPLACED WITH AN EQUAL SIZE TEK SCREW FOR PENETRATION INTO THE MULLION.

WHEN ONE PRODUCT IS MULLED TO ANOTHER PRODUCT, THE JAMBS SHALL BE FASTENED TO THE MULLION AS SHOWN IN THE PRODUCT MULLION DETAILS ON THIS SHEET.

FOR PRE-ATTACHMENT OF PLATE MULL "A" TO JAMB

NOTE: JAMB TO MULLION SCREWS WITH THE PLATE MULLION "A" MAY BE REVERSED SUCH THAT THEY RUN THROUGH THE PLATE & INTO THE JAMB PROVIDING THE SCREWS FULLY PENETRATE THE JAMB.

APPROVED AS COMPLYING WITH THE SOUTH FLORIDA BUILDING CODE
DATE AUG 23 2001
BY Manuel Seres
PRODUCT CONTROL DIVISION
BUILDING CODE COMPLIANCE OFFICE
ACCEPTANCE NO. 01-0724.07

DRAWN BY: W.W.S.	CHECKED BY: W.W.S.
PLOT: 1=3	DATE: 10/13/00

NO.	REVISION DESCRIPTION	BY	DATE

DRAWING TITLE: CLIPPED IMPACT & NON-IMPACT EXTRUDED PLATE MULLIONS

MANUFACTURER: KML WINDOWS, INC.
23 BUCHANAN COURT
LONDON, ONTARIO, CANADA N5Z4P9
519-681-7012

CONSULTANTS: W. W. SCHAEFER ENGINEERING & CONSULTING, P.A.
600 SANDTREE DRIVE; SUITE 203B
PALM BEACH GARDENS, FL 33403
PHONE: 561-775-4902 FAX: 561-775-4903

CERTIFICATION
JUL 17 2001
WARREN W. SCHAEFER, P.E.
P.E. NO. 44135

DRAWING NO. 1003F
REV.
SHEET NO. 5 OF 5