MIAMI-DADE COUNTY, FLORIDA
METRO-DADE FLAGLER BUILDING

BUILDING CODE COMPLIANCE OFFICE
METRO-DADE FLAGLER BUILDING
140 WEST FLAGLER STREET, SUITE 1603
MIAMI, FLORIDA 33130-1563
(305) 375-2901 FAX (305) 375-2908

CONTRACTOR LICENSING SECTION
(305) 375-2527 FAX (305) 375-2558

CONTRACTOR ENFORCEMENT DIVISION
(305) 375-2966 FAX (305) 375-2908

PRODUCT CONTROL DIVISION
(305) 375-2902 FAX (305) 372-6339

PRODUCT CONTROL NOTICE OF ACCEPTANCE

Dryvit Systems, Inc.
One Energy Way
West Warwick ,RI 02893

Your application for Notice of Acceptance (NOA) of:
Exterior Insulation & Finish System
under Chapter 8 of the Code of Miami-Dade County governing the use of Alternate Materials and Types of Construction, and completely described herein, has been recommended for acceptance by the Miami-Dade County Building Code Compliance Office (BCCO) under the conditions specified herein.

This NOA shall not be valid after the expiration date stated below. BCCO reserves the right to secure this product or material at any time from a jobsite or manufacturer's plant for quality control testing. If this product or material fails to perform in the approved manner, BCCO may revoke, modify, or suspend the use of such product or material immediately. BCCO reserves the right to revoke this approval, if it is determined by BCCO that this product or material fails to meet the requirements of the South Florida Building Code.

The expense of such testing will be incurred by the manufacturer.

ACCEPTANCE NO.: 01-0724.08
EXPIRES: 09/17/2006

Raul Rodriguez
Chief Product Control Division

THIS IS THE COVERSHEET, SEE ADDITIONAL PAGES FOR SPECIFIC AND GENERAL CONDITIONS
BUILDING CODE & PRODUCT REVIEW COMMITTEE

This application for Product Approval has been reviewed by the BCCO and approved by the Building Code and Product Review Committee to be used in Miami-Dade County, Florida under the conditions set forth above.

Francisco J. Quintana, R.A.
Director
Miami-Dade County
Building Code Compliance Office

APPROVED: 09/06/2001

Dryvit Systems, Inc.

ACCEPTANCE NO: 01-0724.08

APPROVED: SEP 0 6 2001

EXPIRES: 09/17/2006

NOTICE OF ACCEPTANCE: SPECIFIC CONDITIONS

1. SCOPE

1.1 This renews the Notice of Acceptance No. 99-1227.08 that was issued on 02/18/2000. It approves Dryvit Exterior Insulation and Finish System as described in Section 2 of this Notice of Acceptance (N.O.A.) designed to comply with the South Florida Building Code 1994 Edition for Miami-Dade County (SFBC). For the location where the pressure requirements, as determined by the SFBC Chapter 23 do not exceed the design pressure rating values indicated in the approved drawing.

2. PRODUCT DESCRIPTION

2.1 **The Dryvit Exterior Insulation and Finish System** and its components shall be constructed in strict compliance with the following documents: Drawing No.1 through 2 of 2, titled "Large Scale Missile Impact for Gypsum Based Substrate& Window /Door Details" prepared by Dryvit Systems, Inc. dated 10/30/97 & 10/01/99, with latest revision on 11/15/99. They bear the Miami-Dade County Product Control Approval stamp with the Notice of Acceptance number and approval date by the Miami-Dade County Product Control Division. These documents shall hereinafter be referred to as the Approved Drawing.

3. LIMITATIONS

3.1 This system is not to be used on horizontal surfaces exposed to weather except as a soffit, it is intended to be used on wall systems only.

4. INSTALLATION

4.1 The Dryvit EIFS and its components shall be installed in strict compliance with the approved drawing.

4.2 The installation of this product **does not require** Hurricane Protection System.

5. LABELING

5.1 Each component shall bear a permanent label with the manufacturer's logo, city, state and the following statement "Miami-Dade County Product Control Approved".

6. BUILDING PERMIT REQUIREMENTS

6.1 Application for Building Permit shall be accompanied by copies of the following:

- **6.1.1** This Notice of Acceptance.
- **6.1.2** Duplicate copies of the approved drawings, as identified in Section 2 of this N.O.A.
- **6.1.3** Any other document required by the Building Official or the SFBC in order to properly evaluate the installation of this system.

Candido Font PE, Senior Product Control Examiner
Product Control Division

Dryvit Systems, Inc.

ACCEPTANCE NO: 01-0724.08

APPROVED: SEP 0 6 2001

EXPIRES: 09/17/2006

NOTICE OF ACCEPTANCE STANDARD CONDITIONS

1. Renewal of this Acceptance (approval) shall be considered after a renewal application has been filed and the original submitted documentation, including test supporting data, engineering documents, are no older than eight (8) years.

2. Any and all approved products shall be permanently labeled with the manufacturer's name, city, state, and the following statement: "Miami-Dade County Product Control Approved", or as specifically stated in the specific conditions of this Acceptance.

3. Renewals of Acceptance will not be considered if:
   a) There has been a change in the South Florida Building Code affecting the evaluation of this product and the product is not in compliance with the code changes;
   b) The product is no longer the same product (identical) as the one originally approved;
   c) If the Acceptance holder has not complied with all the requirements of this acceptance, including the correct installation of the product;
   d) The engineer who originally prepared, signed and sealed the required documentation initially submitted is no longer practicing the engineering profession.

4. Any revision or change in the materials, use, and/or manufacture of the product or process shall automatically be cause for termination of this Acceptance, unless prior written approval has been requested (through the filing of a revision application with appropriate fee) and granted by this office.

5. Any of the following shall also be grounds for removal of this Acceptance:
   a) Unsatisfactory performance of this product or process.
   b) Misuse of this Acceptance as an endorsement of any product, for sales, advertising or any other purpose.

6. The Notice of Acceptance number preceded by the words Miami-Dade County, Florida, and followed by the expiration date may be displayed in advertising literature. If any portion of the Notice of Acceptance is displayed, then it shall be done in its entirety.
7. A copy of this Acceptance as well as approved drawings and other documents, where it applies, shall be provided to the user by the manufacturer or its distributors and shall be available for inspection at the job site at all time. The engineer need not reseal the copies.

8. Failure to comply with any section of this Acceptance shall be cause for termination and removal of Acceptance.

9. This Notice of Acceptance consists of pages 1, 2 and this last page 3.

Candido Font PE, Senior Product Control Examiner
Product Control Division

END OF THIS ACCEPTANCE

Dryvit Systems, Inc.

ACCEPTANCE NO: 01-0724.08

APPROVED: SEP 0 6 2001

EXPIRES: 09/17/2006

NOTICE OF ACCEPTANCE: EVIDENCE SUBMITTED
(For File ONLY. Not part of NOA)

A DRAWING

1. Drawing prepared by Dryvit Systems, Inc. titled "Large Scale Missile Impact for Gypsum Based Substrate & Window /Door Details", drawing No 1 through 2 of 2, dated 10/30/97 & 10/01/99, with latest revision on 11/15/99, signed and sealed by R. E. Kroll, PE. on 11/17/99

B TEST

1 Test report on Large Missile Impact Test, Cyclic Load Test and Static Air Pressure Test "Dryvit Outsulation System with Standard Reinforcing Mesh and Panzer 20 Reinforcing Mesh", prepared by Architectural Testing, Inc., report # 01-30649.01 dated 01/19/98, signed and sealed by A. N. Reeves PE.

2 Tensile Test Report per ASTM C297 on Primus & Genesis Products by Architectural Testing Inc., test report No. 01-30333.02 dated 12/15/97 signed and sealed by R. E. Kroll, PE.

C CALCULATIONS

N/A

D MATERIAL CERTIFICATION

1 Product Control Notice of Acceptance No. 98-0904.04 issued to Apache Products Company on 11/26/98 and expiring on 01/11/02.

E STATEMENTS.

1 Test compliance letter issued by Architectural Testing, Inc. on 01/19/98 signed and sealed by A. N. Reeves, PE.

2 No financial interest letter issued by Dryvit Systems, Inc. on 03/30/98, signed by W. M. Preston and notarized by L. A. Rollins.

3 No change letter issued by Dryvit Systems, Inc. on 01/19/2001, signed by W. M. Preston.

Candido Font PE, Senior Product Control Examiner
Product Control Division

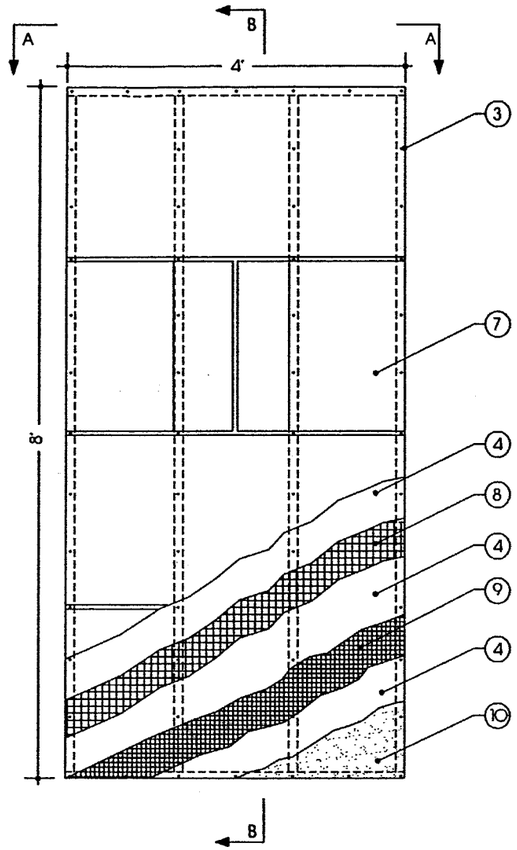

SECTION B—B

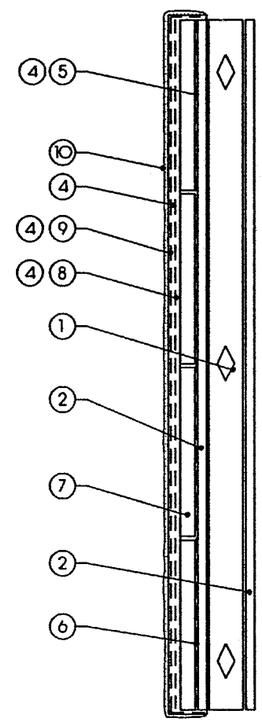

SECTION A—A

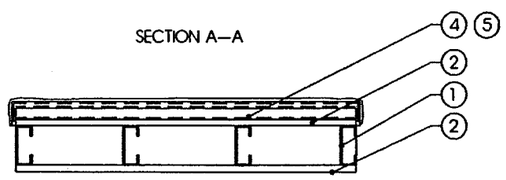

MATERIAL LIST

1. 3 5/8" X 1 5/8" X 18 GAUGE STEEL STUDS AT 16" O.C.
2. 1/2" GYPSUM SHEATHING OR 1/2" DENS—GLASS GOLD
3. NO. 6 X 1 1/4" SELF TAPPING SCREWS SPACED 8" O.C.
4. DRYVIT BASE COAT: PRIMUS MIXED 1:1 BY WEIGHT WITH PORTLAND CEMENT AND WATER. PRIMUS IS A 100 PERCENT POLYMER BASED PRODUCT.
5. DRYVIT'S STANDARD PLUS REINFORCING MESH: 6.0 OZ/SQ. YD FIBERGLASS REINFORCING MESH EMBEDDED IN THE DRYVIT BASE COAT. THE STANDARD PLUS REINFORCING MESH SHALL BE LAPPED A MINIMUM OF 2 1/2" AT ALL EDGES.
6. ADHERE THE EXPANDED POLYSTYRENE INSULATION BOARD WITH DRYVIT'S PRIMUS MIXTURE OR GENESIS MIXTURE. PRIMUS IS A 100 PERCENT POLYMER BASED PRODUCT AND GENESIS IS A FIBER REINFORCED 100 PERCENT ACRYLIC BASED PRODUCT. THEY ARE MIXED 1:1 BY WEIGHT WITH PORTLAND CEMENT AND WATER. THE ADHESIVE IS APPLIED WITH A 3/8" X 3/8" NOTCH TROWEL WITH NOTCHES SPACED A MAXIMUM OF 1 1/2" O.C. THE ADHESIVE MAY BE APPLIED TO THE BACK OF THE INSULATION BOARD EITHER VERTICALLY OR HORIZONTALLY.
7. APACHE PRODUCTS INSULATION BOARD, MINIMUM 1" THICK EPS (1 PCF). AFTER APPLYING ADHESIVE TO INSULATION BOARD, SLIDE BOARD INTO PLACE AND APPLY PRESSURE TO ENSURE CONTACT WITH SUBSTRATE. INSULATION SHALL BE APPLIED HORIZONTALLY AND VERTICAL JOINTS SHALL BE STAGGERED.
8. DRYVIT PANZER 20 REINFORCING MESH: 20.5 OZ/SQ. YD FIBERGLASS REINFORCING MESH EMBEDDED IN DRYVIT BASE COAT. PANZER 20 MESH EDGES SHALL BE ABUTTED TIGHTLY. DON NOT OVERLAP.
9. DRYVIT'S STANDARD REINFORCING MESH: 4.3 OZ/SQ. YD FIBERGLASS REINFORCING MESH EMBEDDED IN THE DRYVIT BASE COAT. THE STANDARD REINFORCING MESH SHALL BE LAPPED A MINIMUM OF 2 1/2" AT ALL EDGES.
10. DRYVIT FINISH: A 100 PERCENT ACRYLIC BASED MATERIAL AVAILABLE IN VARIOUS TEXTURES

GENERAL NOTES

1. THIS SYSTEM HAS BEEN DESIGNED IN ACCORDANCE WITH THE SOUTH FLORIDA BUILDING CODE 1994 EDITION AND ITS LATEST SUPPLEMENTS.
2. THIS SYSTEM HAS BEEN TESTED IN ACCORDANCE WITH DADE COUNTY PROTOCOLS PA—201, PA—202, AND PA—203 FOR LARGE MISSLE IMPACT. STRUCTURAL AND CYCLIC TESTING.
3. THIS SYSTEM SHALL BE APPLIED BY A LICENSED PLASTERING CONTRACTOR FOLLOWING THIS NOTICE OF ACCEPTANCE THE RECOMMENDATION OF DRYVIT SYSTEMS, INC. AND THE APPLICABLE SECTIONS OF THE SOUTH FLORIDA BUILDING CODE.
4. THE ENGINEER AND/OR ARCHITECT OF RECORD FOR EACH PROJECT USING THIS SYSTEM SHALL SIZE ALL STUD FRAMING TO ENSURE CONFORMANCE WITH STUD DEFLECTION AND STRESS LIMITATIONS AS REQUIRED BY ALL GOVERNING CODES AND THIS DOCUMENT.
5. INSULATION BOARDS SHAL BE POSITIONED IN A RUNNING BOND PATTERN.
6. ALL STUDS USED WITH THIS SYSTEM SHALL BE COMPLETELY SHEATHED AT THE INTERIOR FLANGE OR BRIDGED AT A MAXIMUM OF EVERY 5' OF STUD LENGTH OR AS SPECIFIED BY THE STUD MANUFACTURER.
7. ALL STEEL STUDS SHALL BE STRUCTURAL WITH 1 5/8" MINIMUM FLANGE WIDTH AND HAVE A MINIMUM YIELD STRENGTH OF 33000 PSI.
8. DETAILS ON SHEET 2 OF 2 ARE TYPICAL AND SHOW INTENT TO PREVENT WATER INFILTRATION INTO AND BEHIND THIS SYSTEM. ALTERNATE DETAILING AND SPECIFIC CONDITIONS NOT COVERED BY THE TYPICAL DETAILS ARE THE RESPONSIBILITY OF THE LICENSED DESIGN PROFESSIONAL IN CONSULTATION WITH DRYVIT SYSTEMS, INC.

DESIGN PRESSURE RATING
+/- 66.7 PSF

99-1227.08

APPROVED AS COMPLYING WITH THE
SOUTH FLORIDA BUILDING CODE
DATE February 18, 2000
BY
PRODUCT CONTROL DIVISION
BUILDING CODE COMPLIANCE OFFICE
ACCEPTANCE NO. 99-1227.08

R.E. Kroll
11/17/99

PRODUCT RENEWED
ACCEPTANCE No. 01-0724.08
EXPIRATION DATE 09/17/2006
By
PRODUCT CONTROL DIVISION
BUILDING CODE COMPLIANCE OFFICE

DRYVIT SYSTEMS, INC. One Energy Way West Warwick, Rhode Island	dryvit®	LARGE SCALE MISSLE IMPACT FOR GYPSUM BASED SUBSTRATE	REV: 4 11/15/99
SCALE: NTS	DATE: 10/30/97	Florida P.E. R.E. KROLL — P.E. (STRUCTURAL); REGISTRATION NO. PE—0038477	SHEET: 1 OF 2

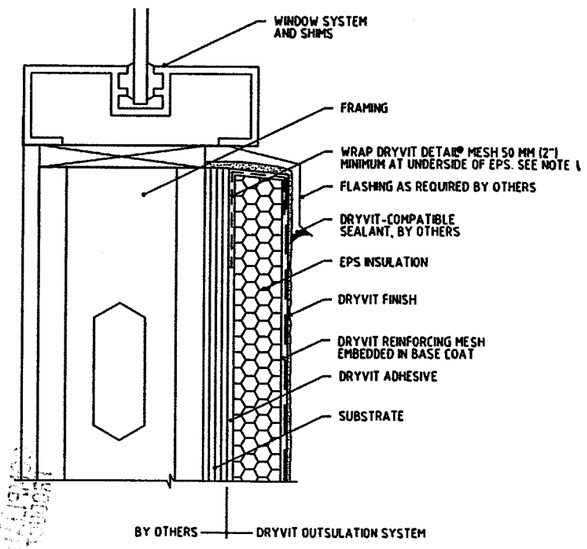

WINDOW SILL

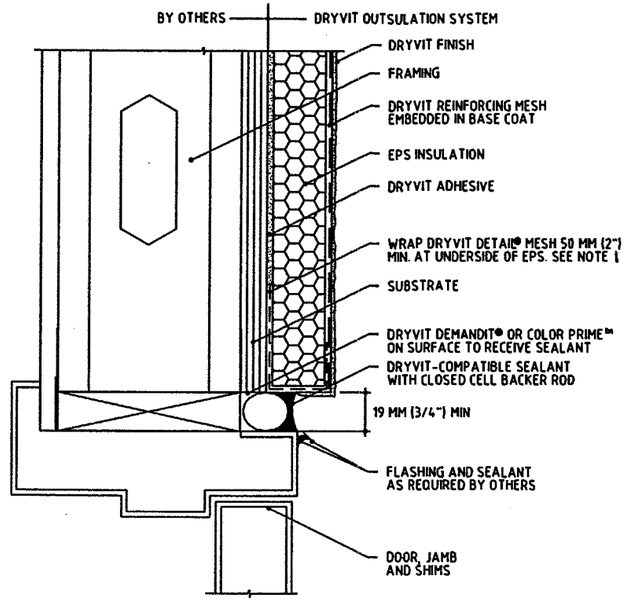

DOOR JAMB

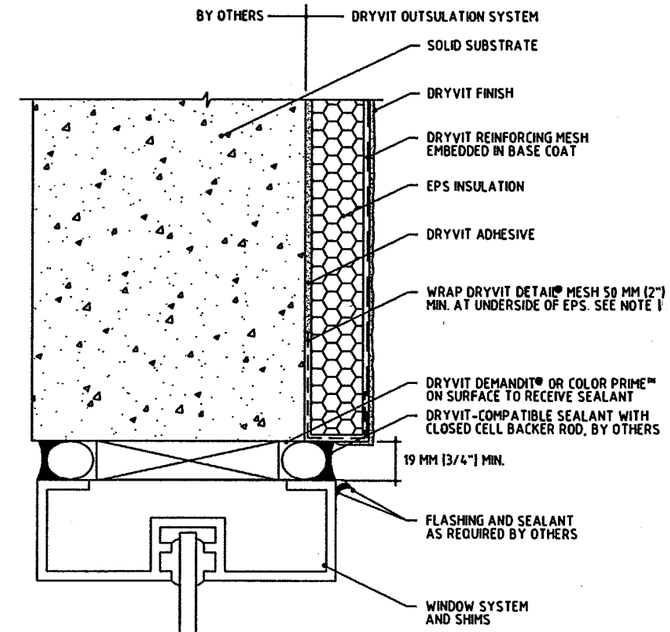

WINDOW HEAD

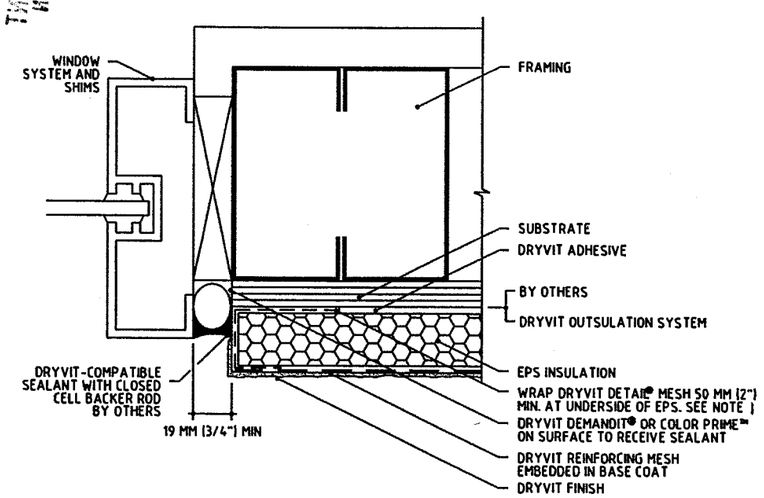

WINDOW JAMB

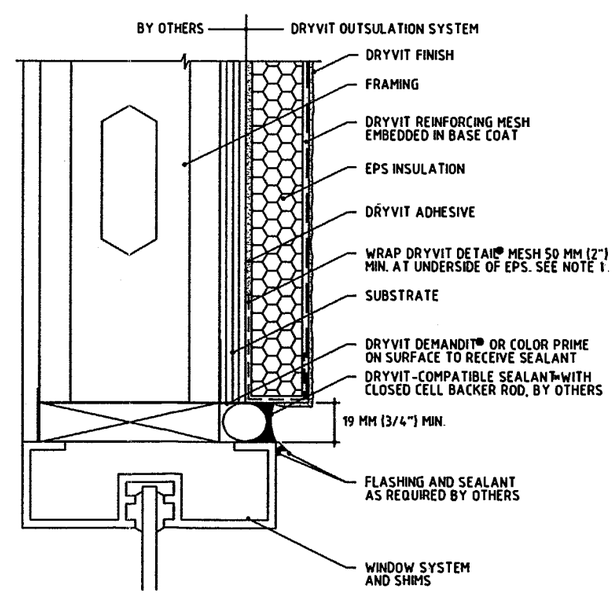

WINDOW HEAD

PRODUCT RENEWED
ACCEPTANCE NO. 01-0724.08
EXPIRATION DATE 09/17/2006
By
PRODUCT CONTROL DIVISION
BUILDING CODE COMPLIANCE OFFICE

NOTE
1. AS AN OPTION, THE REINFORCED BASE COAT MAY BE EXTENDED ONTO THE FRAMED OPENING.

R.E. Kroll 11/17/99

APPROVED AS COMPLYING WITH THE SOUTH FLORIDA BUILDING CODE
DATE February 18, 2000
BY
PRODUCT CONTROL DIVISION
BUILDING CODE COMPLIANCE OFFICE
ACCEPTANCE NO. 99-1227.08

99-1227.08

MPACDADDWG

DRYVIT SYSTEMS, INC. One Energy Way West Warwick, Rhode Island	dryvit®	WINDOW / DOOR DETAILS	REV: 1 11/15/99
SCALE: NTS	DATE: 10/1/99	Florida P.E. R.E. KROLL — P.E. (STRUCTURAL); REGISTRATION NO. PE—0038477	SHEET: 2 OF 2