MIAMI-DADE

BUILDING CODE COMPLIANCE OFFICE (BCCO)
PRODUCT CONTROL DIVISION

MIAMI-DADE COUNTY, FLORIDA
METRO-DADE FLAGLER BUILDING
140 WEST FLAGLER STREET, SUITE 1603
MIAMI, FLORIDA 33130-1563
(305) 375-2901 FAX (305) 375-2908

NOTICE OF ACCEPTANCE (NOA)

Galaxy Window and Door, Inc.
1900 N. Andrews Ave. Ext. Unit A
Pompano Beach, FL 33069

SCOPE:
This NOA is being issued under the applicable rules and regulations governing the use of construction materials. The documentation submitted has been reviewed by Miami-Dade County Product Control Division and accepted by the Board of Rules and Appeals (BORA) to be used in Miami Dade County and other areas where allowed by the Authority Having Jurisdiction (AHJ).

This NOA shall not be valid after the expiration date stated below. The Miami-Dade County Product Control Division (In Miami Dade County) and/or the AHJ (in areas other than Miami Dade County) reserve the right to have this product or material tested for quality assurance purposes. If this product or material fails to perform in the accepted manner, the manufacturer will incur the expense of such testing and the AHJ may immediately revoke, modify, or suspend the use of such product or material within their jurisdiction. BORA reserves the right to revoke this acceptance, if it is determined by Miami-Dade County Product Control Division that this product or material fails to meet the requirements of the applicable building code.

This product is approved as described herein, and has been designed to comply with the High Velocity Hurricane Zone of the Florida Building Code.

DESCRIPTION: "Tropical Force" Series Extruded PVC Fixed Window

APPROVAL DOCUMENT: Drawing No. **S-2133**, dated 06/12/01, with revision #1 dated 05/20/02, titled "Galaxy Windows Extruded Vinyl Fixed Frame up to 115.5" x 76" Triple Mulled", sheets 1 through 5, prepared by R. W. Building Consultant, Inc., bearing the Miami-Dade County Product Control Approval stamp with the Notice of Acceptance number and approval date by the Miami-Dade County Product Control Division.

MISSILE IMPACT RATING: Large and Small Missile Impact Resistant

LABELING: Each unit shall bear a permanent label with the manufacturer's name or logo, city, state and following statement: "Miami-Dade County Product Control Approved", unless otherwise noted herein.

RENEWAL of this NOA shall be considered after a renewal application has been filed and there has been no change in the applicable building code negatively affecting the performance of this product.

TERMINATION of this NOA will occur after the expiration date or if there has been a revision or change in the materials, use, and/or manufacture of the product or process. Misuse of this NOA as an endorsement of any product, for sales, advertising or any other purposes shall automatically terminate this NOA. Failure to comply with any section of this NOA shall be cause for termination and removal of NOA.

ADVERTISEMENT: The NOA number preceded by the words Miami-Dade County, Florida, and followed by the expiration date may be displayed in advertising literature. If any portion of the NOA is displayed, then it shall be done in its entirety.

INSPECTION: A copy of this entire NOA shall be provided to the user by the manufacturer or its distributors and shall be available for inspection at the job site at the request of the Building Official.
This NOA consists of this page 1 as well as approval document mentioned above.
The submitted documentation was reviewed by **Manuel Perez, P.E.**

GALAXY WINDOW & DOOR, INC.

TROPICAL FORCE SERIES
EXTRUDED VINYL FIXED FRAME WINDOWS

GENERAL NOTES

1. THIS PRODUCT IS DESIGNED TO COMPLY WITH FLORIDA BUILDING CODE.
2. WOOD BUCKS BY OTHERS, MUST BE ANCHORED PROPERLY TO TRANSFER LOADS TO THE STRUCTURE.
3. PRODUCT ANCHORS SHALL BE AS LISTED AND SPACED AS SHOWN ON DETAILS. ANCHOR EMBEDMENT TO BASE MATERIAL SHALL BE BEYOND WALL DRESSING OR STUCCO.
4. DESIGNED PRESSURE RATING SEE TABLE PAGE 1.
5. WHEN THIS PRODUCT IS USED IN AREA REQUIRING WINDBORNE DEBRIS PROTECTION, FLORIDA BUILDING CODE APPROVED IMPACT RESISTANT SHUTTERS ARE NOT REQUIRED.
6. THIS SYSTEM MEETS THE WATER REQUIREMENTS FOR "HIGH VELOCITY HURRICANE ZONES".
7. A GALAXY SINGLE HUNG WINDOW MAY BE SUBSTITUTED FOR FOR ANY UNIT IN THE MULLED UNIT COMBINATION WITH THE SUBMITTAL OF A CURRENT SINGLE HUNG WINDOW NOTICE OF ACCEPTANCE.
8. IN THE MULLED APPLICATION YOU CAN NOT EXCEED THREE UNITS OR A MAXIMUM WIDTH OF 115.5".

FIXED FRAME WINDOW CONSTRUCTION
(Common to all conditions)

Window Construction:

Material:
Main frame; Extruded white Vinyl. The max. outer wall thk. is .083" the Min. inner wall thk. is .044".
Mull post; Extruded Aluminum 6063-T6. The max. wall thk. is .125" and the min. wall thk. is .076" thk.

Frame Construction:
The main frame is constructed from extruded rigid Vinyl lineals. There is a steel "U" reinforcement, (Meeting Rail Reinforcement) measuring .50" x .566" x .051" thick wall in the head, sill and side jambs. The corners are mitered and fusion welded.

Glazing:
The glass is 15/32" (.472") Overall, consisting of 1/8" Tempered glass, .097" Sentry Glass Plus by Dupont, 1/4" Tempered glass Laminated Glass by Dlubak. It is wet glazed on the exterior with Pecora 896 and is held in on the interior side with an extruded Vinyl Glazing Bead.

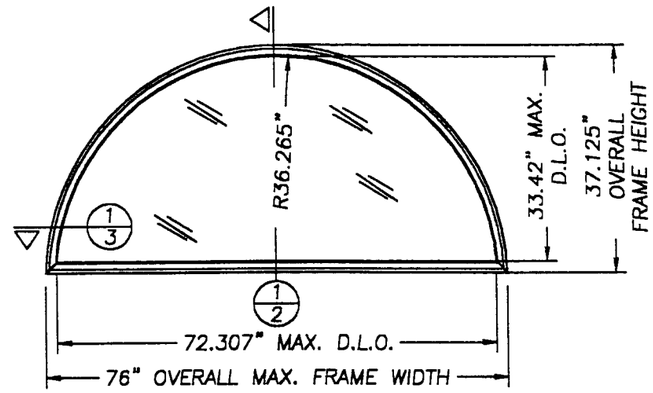

SINGLE RADIUS TOP ELEVATION VIEW

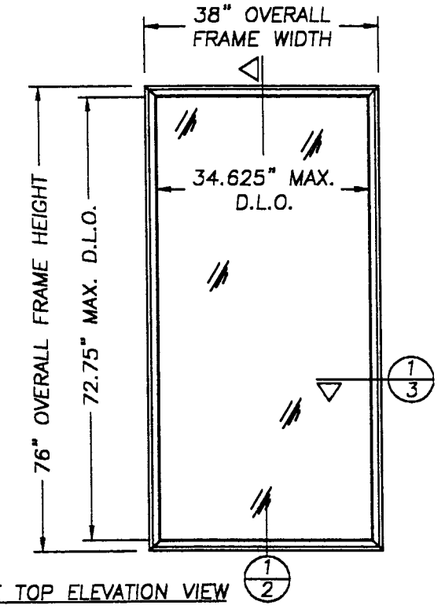

SINGLE RECTANGLE TOP ELEVATION VIEW

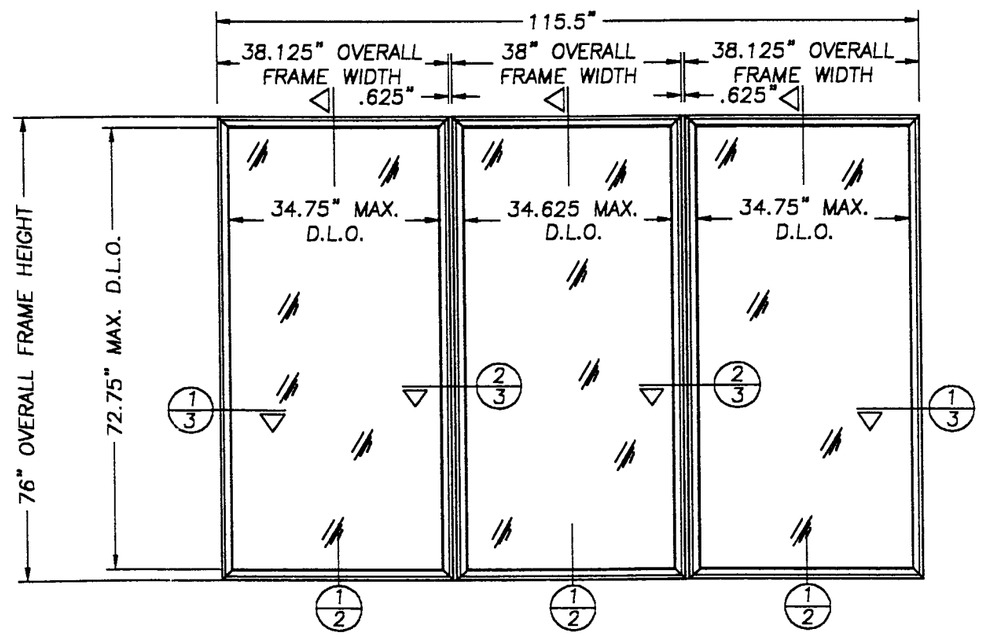

MULLED ELEVATION VIEW

TABLE OF CONTENTS	
SHEET #	DESCRIPTION
1	GENERAL NOTES & TYPICAL ELEVATIONS
2	VERTICAL CROSS SECTION, B.O.M & GLAZING DETAIL
3	HORIZONTAL CROSS SECTIONS
4	ANCHORING LOCATIONS
5	UNIT COMPONENTS

DESIGN PRESSURE RATING		
UNIT TYPE	WHERE WATER INFILTRATION REQUIREMENT IS NEEDED	
SINGLE REC. UNIT	+60.0 psf	-65.0 psf
SINGLE RAD. UNIT	+60.0 psf	-65.0 psf
MULLED UNIT	+60.0 psf	-65.0 psf

Approved as complying with the Florida Buiding Code
Date SEPT. 12, 2002
NOA# 01-0725.03
Miami Dade Product Control Division
By Manuel Perez

GALAXY Window & Door, Inc.
1900 N. Andrews Avenue
Pompano Beach, FL 33069
PH. 954.978.2400

PRODUCT: GALAXY WINDOWS EXTRUDED VINYL FIXED FRAME UP TO 115.5" x 76" TRIPLE MULLED
PART OR ASSEMBLY: GENERAL NOTES & TYPICAL ELEVATIONS

NO.	DATE	REVISION	BY
1	5/20/02	GENERAL REVISION	TJH

REVISIONS

RW BUILDING CONSULTANTS, INC.
813.684.3831

DATE: 06/12/01
SCALE: N.T.S.
DWG. BY: TJH
CHK. BY: RW
DRAWING NO.: S-2133
SHEET 1 OF 5

Item	DESCRIPTION	Material
1	EXTRUDED VINYL FIXED WINDOW MAIN FRAME (BY PH TECH)	VINYL
2	FIXED WINDOW GLASS STOP EXTRUDED VINYL (BY PH TECH)	VINYL
3	EXTRUDED VINYL FIXED WINDOW MAIN FRAME CAP (PH TECH)	VINYL
4	EXTRUDED VINYL FIXED WINDOW MAIN FRAME SILL CAP(BY PH TECH)	VINYL
5	GLAZING .472" TEMPERED GLASS (BY DULBAK)	GLASS
6	#10 x 2" PHIL. PANHEAD SCREW	STEEL
7	NOT USED	–
8	2x WOOD BUCK	WOOD
9	1/4" SHIM MATERIAL	WOOD
10	GLAZING COMPOUND (PECORA 896)	SILICONE
11	MEETING RAIL REINFORCEMENT (.051" THK. WALL)	STEEL
12	#6 x 1/2" PHIL. FLATHEAD SELF TAPPING SCREW	STEEL
13	ANCHORING POINT REINFORCEMENT (PVC SHEET .175" THK.)	PVC
14	#10 x 1/2" PANHEAD SCREW	STEEL
15	MULL SECTION TIE STRAP (1.5" W. x 18" L. x .061")	STEEL
16	EXTRUDED ALUMINUM MULL POST (PH TECH)	ALUM.
17	#10 x 3/4" SHEET METAL SCREW	STEEL

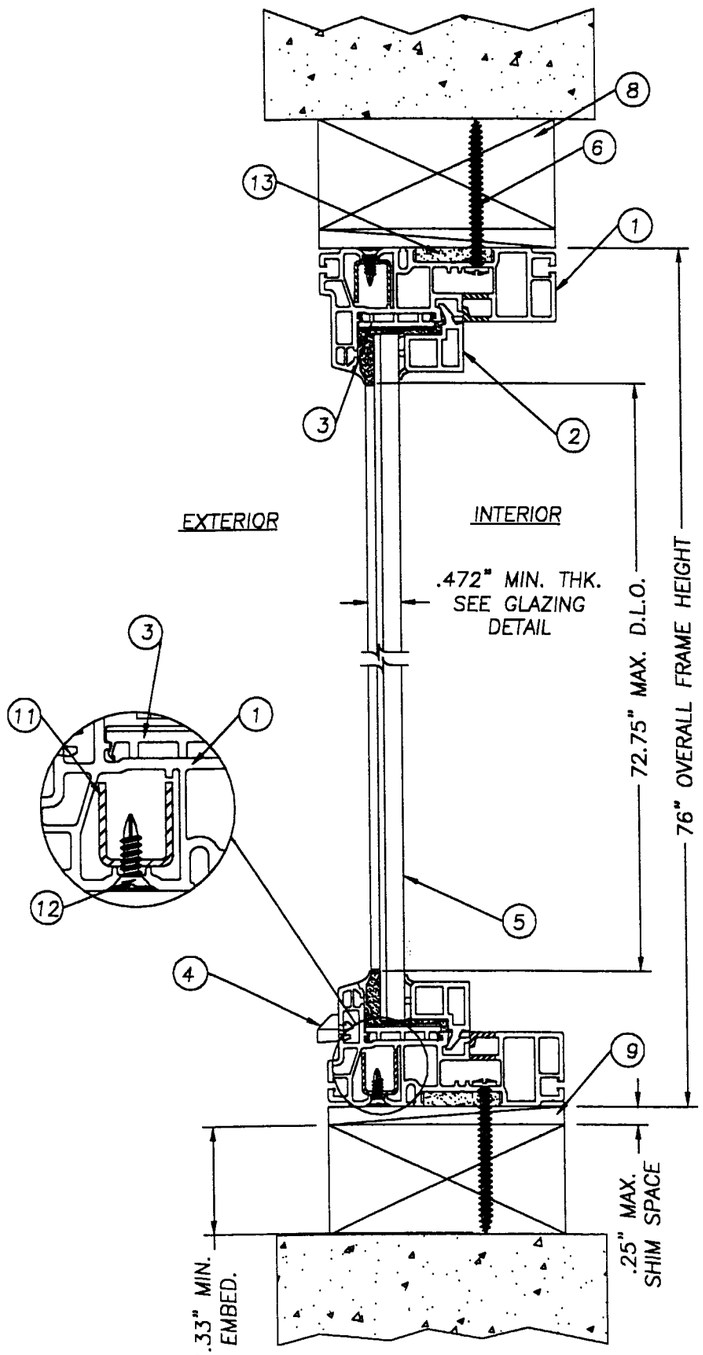

1/2 VERTICAL CROSS SECTION
SCALE: 1/2" = 1"

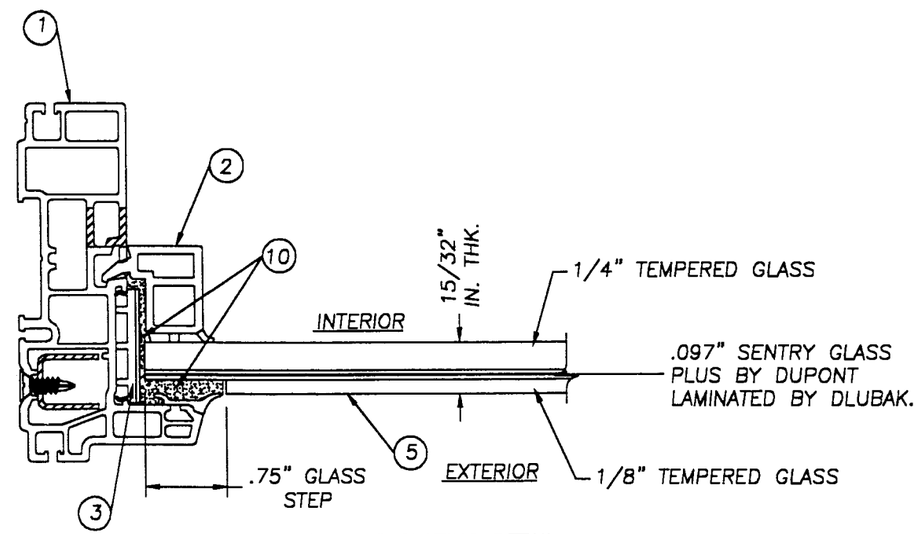

FIXED UNIT GLAZING DETAIL
GLASS BITE = .50"
N.T.S.

GALAXY Window & Door, Inc.
1900 N. Andrews Avenue
Pompano Beach, FL 33069
PH. 954.978.2400

PRODUCT: GALAXY WINDOWS EXTRUDED VINYL FIXED FRAME UP TO 115.5" x 76" TRIPLE MULLED
PART OR ASSEMBLY: VERTICAL CROSS SECTION, B.O.M. & GLAZING DETAIL

REVISIONS

NO.	DATE	GENERAL REVISION	BY
1	5/20/02		TJH

RW BUILDING CONSULTANTS, INC.
813.684.3831

Approved as complying with the Florida Buiding Code
Date SEPT. 12, 2002
NOA# 01-0725.03
Miami Dade Product Control Division
By Manuel Perez

DATE: 06/12/01
SCALE: AS NOTED
DWG. BY: TJH
CHK. BY: RW
DRAWING NO.: S-2133-2
SHEET 2 OF 5

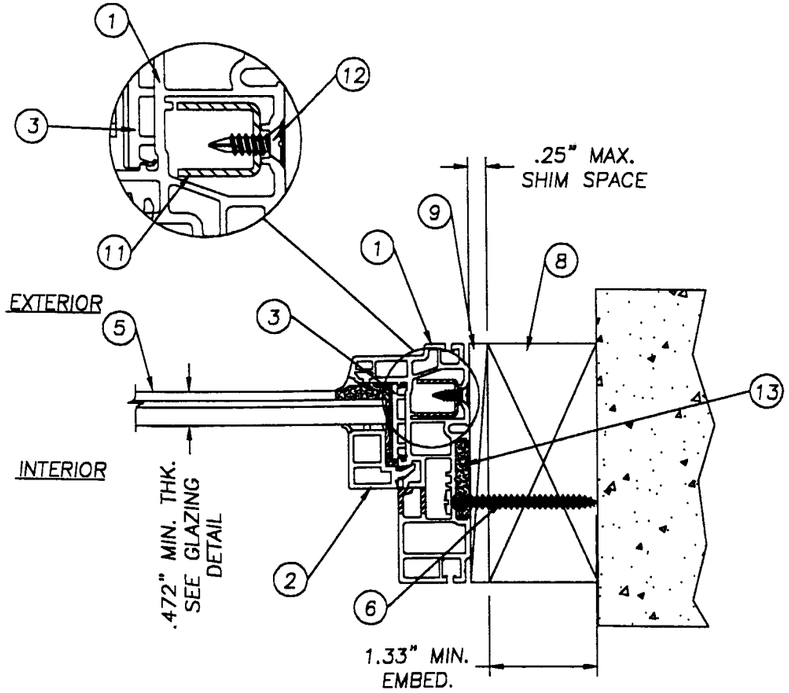

1/3 HORIZONTAL CROSS SECTION
FRAME TO BUCK, TYP.

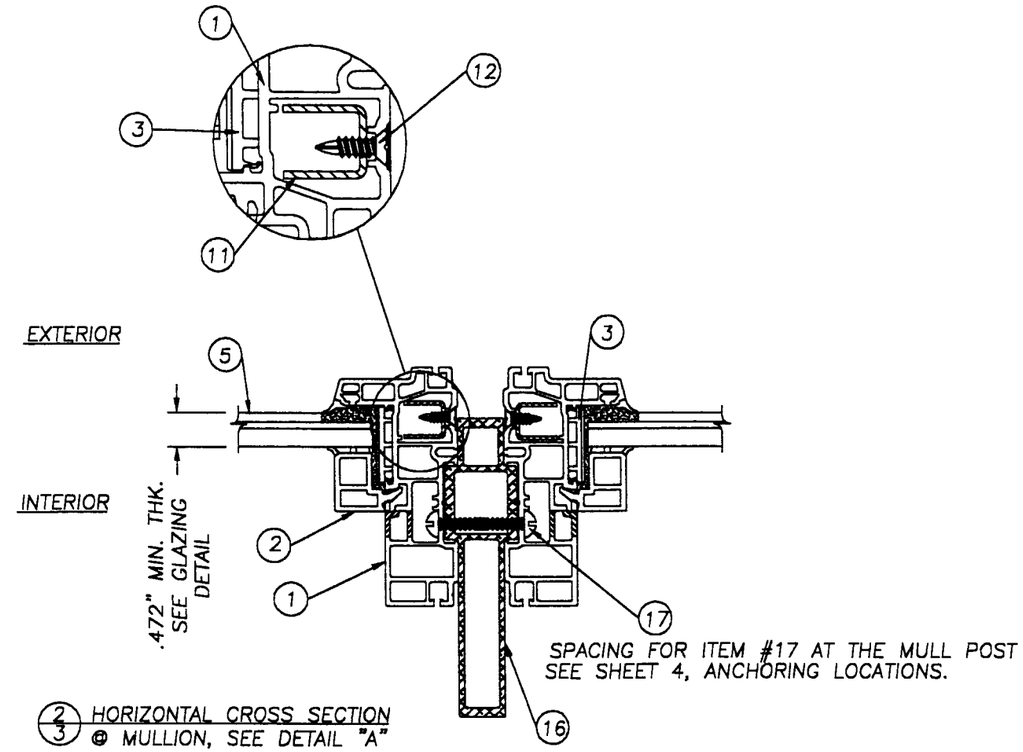

2/3 HORIZONTAL CROSS SECTION
@ MULLION, SEE DETAIL "A"
THIS SHEET FOR MULL SECTION
STRAP TIE VIEW

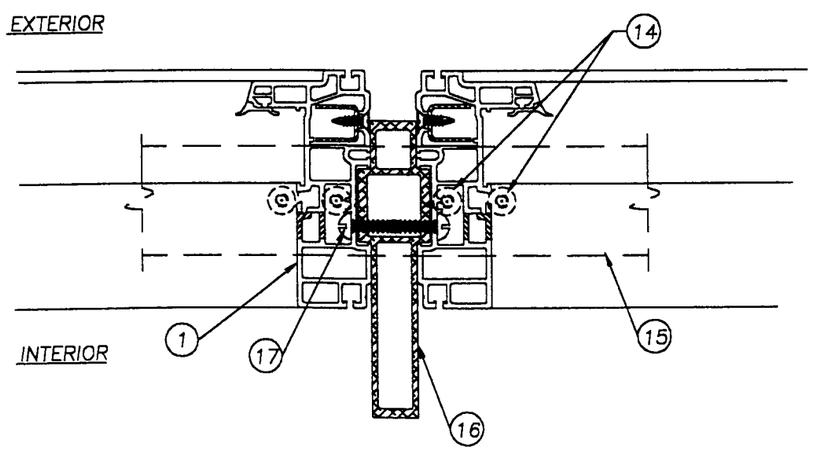

DETAIL "A"
MULL SECTION TIE STRAP VIEW
THE GLAZING HAS BEEN OMITTED FOR
CLARITY OF THE TIE STRAP
SEE NOTE THIS SHT.

NOTE:
THE MULL SECTION TIE STRAP IS ATTACHED TO THE UNDER SIDE OF BOTH WINDOWS, GOING FROM THE STRAP UP INTO THE UNIT, AT THE MULL POST WITH (4) ITEM #14 (#10 x 1/2" PANHEAD SCREW) PER WINDOW. WHEN THE MULLED WINDOW IS BEING ANCHORED INTO THE BUCK DRILL THROUGH THE TIE STRAP AT EACH ANCHOR POINT FOR THE ANCHORING SCREW. ATTACH THE UNIT TO THE BUCK THROUGH THE MULL SECTION TIE STRAP.

Approved as complying with the Florida Buiding Code
Date SEPT. 12, 2002
NOA# 01-0725.03
Miami Dade Product Control Division
By Manuel Perez

GALAXY Window & Door, Inc.
1900 N. Andrews Avenue
Pompano Beach, FL 33069
PH. 954.978.2400

PRODUCT: GALAXY WINDOWS EXTRUDED VINYL FIXED FRAME UP TO 115.5" x 76" TRIPLE MULLED
PART OR ASSEMBLY: HORIZONTAL CROSS SECTIONS

REVISIONS

NO.	DATE		BY
1	5/20/02	GENERAL REVISION	TJH

RW BUILDING CONSULTANTS, INC.
813.684.3831

DATE: 06/12/01
SCALE: 1/2" = 1"
DWG. BY: TJH
CHK. BY: RW
DRAWING NO.: S-2133
SHEET 3 OF 5

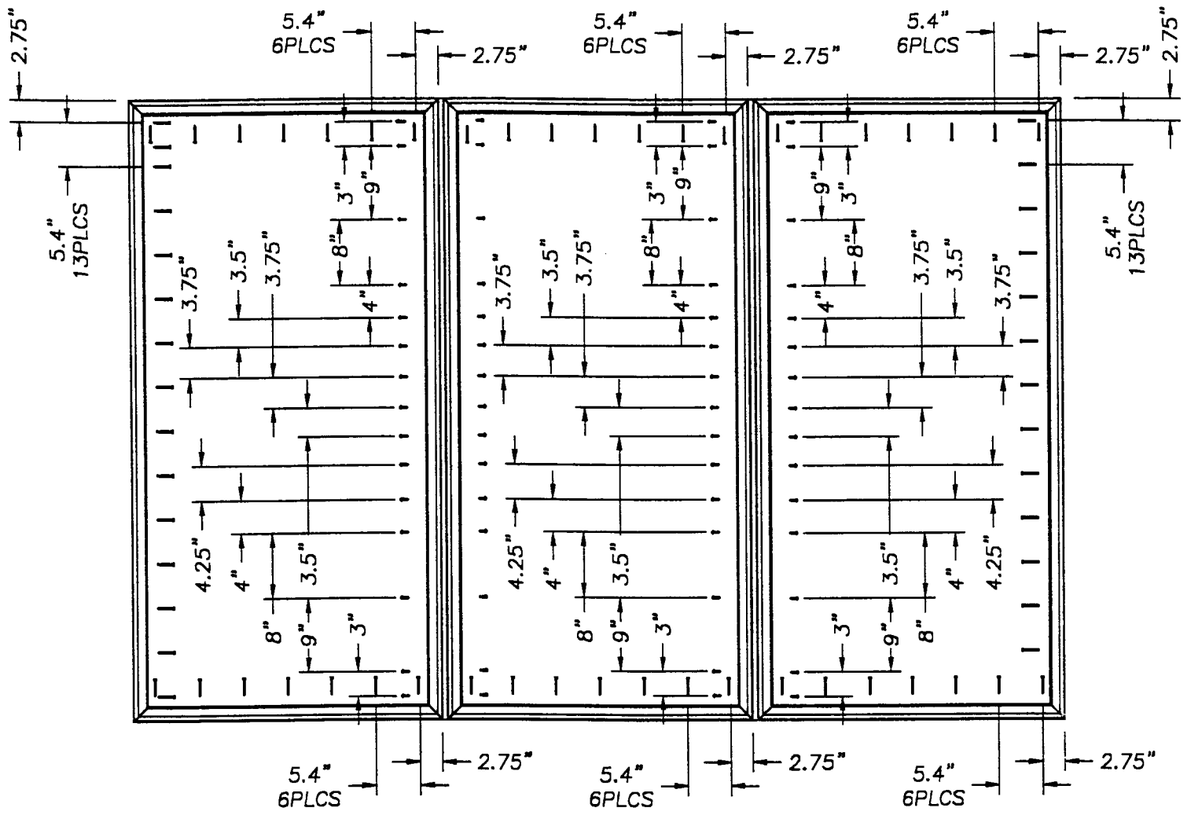

MULLED WINDOW ANCHORING VIEW
SEE NOTES 1 & 2

NOTES:
1. ALL PERIMETER SCREWS ARE ITEM #6 A #10 x 2" PHILLIPS PANHEAD SCREW.
2. ALL SCREWS ATTACHING THE WINDOWS TO THE ALUMINUM MULL POST ARE ITEM #17 A #10 x 3/4" SHEET METAL SCREW.

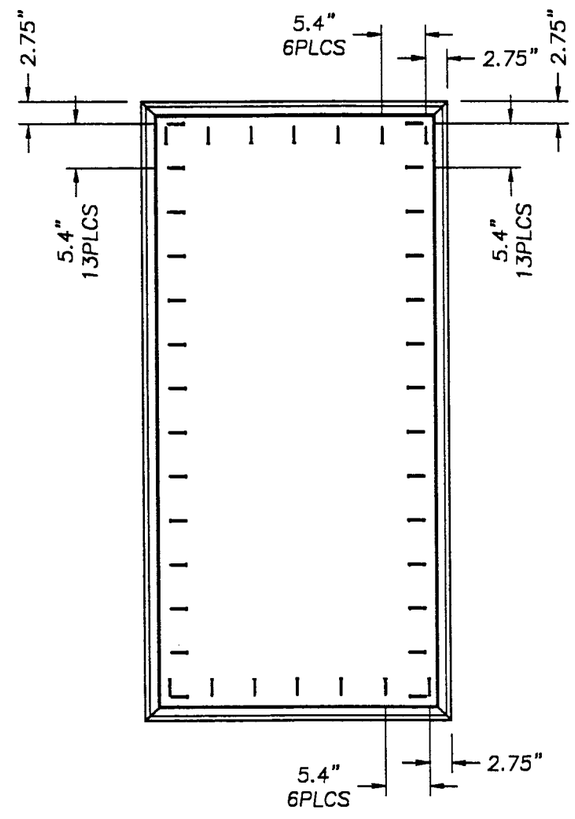

RECTANGLE TOP WINDOW ANCHORING VIEW
SEE NOTE 1

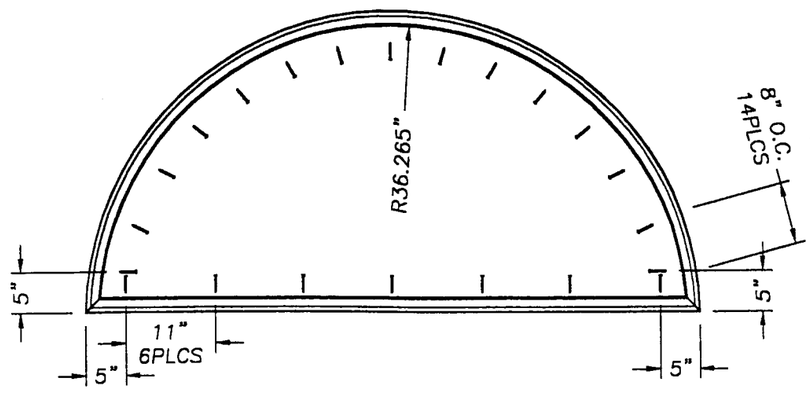

RADIUS TOP WINDOW ANCHORING VIEW
SEE NOTE 1

Approved as complying with the Florida Buiding Code
Date SEPT. 12, 2002
NOA# 01-0725.03
Miami Dade Product Control Division
By Manuel Perez

GALAXY Window & Door, Inc.
1900 N. Andrews Avenue
Pompano Beach, FL 33069
PH. 954.978.2400

PRODUCT:
GALAXY WINDOWS EXTRUDED VINYL FIXED FRAME UP TO 115.5" x 76" TRIPLE MULLED
PART OR ASSEMBLY:
ANCHORING LOCATIONS

REVISIONS

NO.	DATE		BY
1	5/20/02	GENERAL REVISION	THJ

RW BUILDING CONSULTANTS, INC.
813.684.3831

DATE: 06/12/01
SCALE: N.T.S.
DWG. BY: TJH
CHK. BY: RW
DRAWING NO.: S-2133
SHEET 4 OF 5

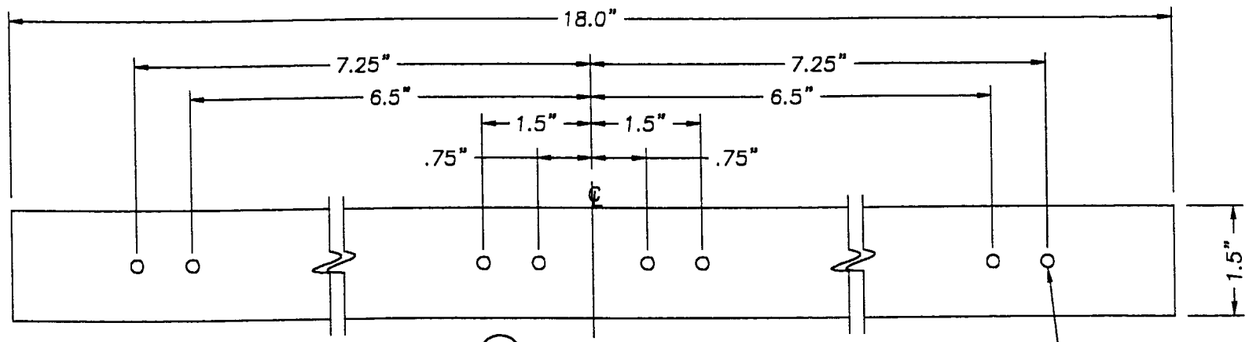

(15) MULL SECTION TIE STRAP
.061" THK. STEEL

PRE PUNCHED HOLES FOR ATTACHING THE STRAP TO THE WINDOW (4) PER WINDOW

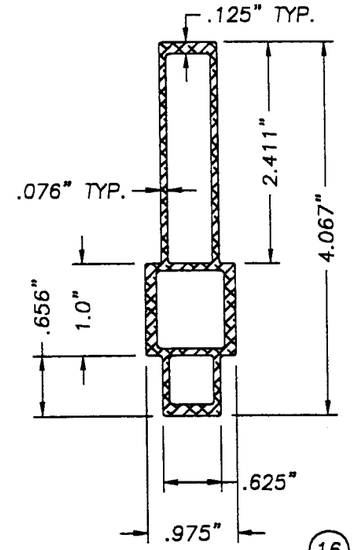

(16) EXTRUDED ALUMINUM MULL POST

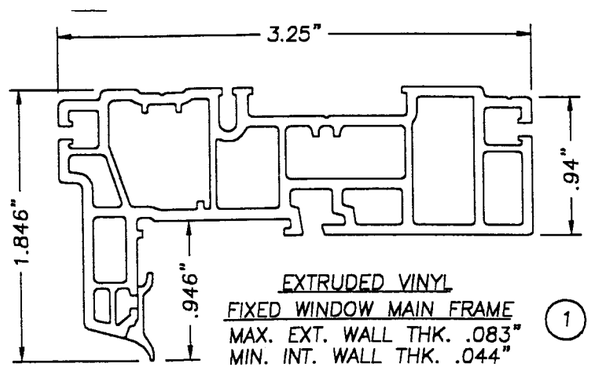

EXTRUDED VINYL
FIXED WINDOW MAIN FRAME (1)
MAX. EXT. WALL THK. .083"
MIN. INT. WALL THK. .044"

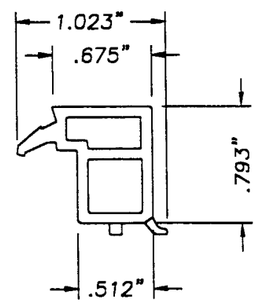

(2) EXTRUDED VINYL GLASS STOP
FIXED WINDOW UNIT
MAX. WALL THK. .058"

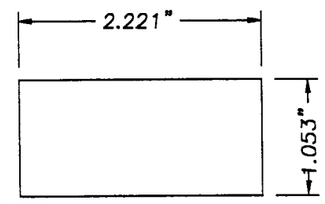

(13) ANCHORING POINT REINFORCEMENT
MAX. THK. .175" PVC

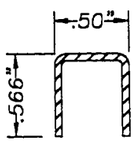

(11) MEETING RAIL REINFORCEMENT
MAX. WALL THK. .051" STEEL

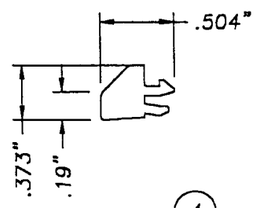

(4) EXTRUDED VINYL
FIXED WINDOW MAIN FRAME SILL CAP

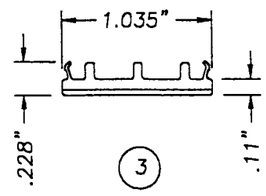

(3) FIXED WINDOW MAIN FRAME CAP
.110" THK. WALL

Approved as complying with the Florida Buiding Code
Date SEPT. 12, 2002
NOA# 01-0725.03
Miami Dade Product Control Division
By Manuel Diaz

GALAXY Window & Door, Inc.
1900 N. Andrews Avenue
Pompano Beach, FL 33069
PH. 954.978.2400

PRODUCT: GALAXY WINDOWS EXTRUDED VINLY FIXED FRAME UP TO 115.5" x 76" TRIPLE MULLED
PART OR ASSEMBLY: UNIT COMPONENTS

REVISIONS

NO.	DATE		BY
1	5/20/02	GENERAL REVISION	TJH

RW BUILDING CONSULTANTS, INC.
813.684.3831

DATE: 06/12/01
SCALE: N.T.S.
DWG. BY: TJH
CHK. BY: RW
DRAWING NO.: S-2133
SHEET 5 OF 5