MIAMI-DADE

MIAMI-DADE COUNTY, FLORIDA
METRO-DADE FLAGLER BUILDING

BUILDING CODE COMPLIANCE OFFICE
METRO-DADE FLAGLER BUILDING
140 WEST FLAGLER STREET, SUITE 1603
MIAMI, FLORIDA 33130-1563
(305) 375-2901 FAX (305) 375-2908

CONTRACTOR LICENSING SECTION
(305) 375-2527 FAX (305) 375-2558

CONTRACTOR ENFORCEMENT DIVISION
(305) 375-2966 FAX (305) 375-2908

PRODUCT CONTROL DIVISION
(305) 375-2902 FAX (305) 372-6339

PRODUCT CONTROL NOTICE OF ACCEPTANCE

Andersen Corporation
100 Fourth Avenue North
Bayport ,MN 55003-1096

Your application for Notice of Acceptance (NOA) of:
FWH 3168 Inswing Wood Patio Door
under Chapter 8 of the Code of Miami-Dade County governing the use of Alternate Materials and Types of Construction, and completely described herein, has been recommended for acceptance by the Miami-Dade County Building Code Compliance Office (BCCO) under the conditions specified herein.

This NOA shall not be valid after the expiration date stated below. BCCO reserves the right to secure this product or material at any time from a jobsite or manufacturer's plant for quality control testing. If this product or material fails to perform in the approved manner, BCCO may revoke, modify, or suspend the use of such product or material immediately. BCCO reserves the right to revoke this approval, if it is determined by BCCO that this product or material fails to meet the requirements of the South Florida Building Code.

The expense of such testing will be incurred by the manufacturer.

ACCEPTANCE NO.: 01-0803.06
EXPIRES: 09/30/2006

Raul Rodriguez
Chief Product Control Division

THIS IS THE COVERSHEET, SEE ADDITIONAL PAGES FOR SPECIFIC AND GENERAL CONDITIONS
BUILDING CODE & PRODUCT REVIEW COMMITTEE

This application for Product Approval has been reviewed by the BCCO and approved by the Building Code and Product Review Committee to be used in Miami-Dade County, Florida under the conditions set forth above.

Francisco J. Quintana, R.A.
Director
Miami-Dade County
Building Code Compliance Office

APPROVED: 09/06/2001

Andersen Corporation

ACCEPTANCE No. : 01-0803.06

APPROVED : SEP 0 6 2001

EXPIRES : September 30, 2006

NOTICE OF ACCEPTANCE: STANDARD CONDITIONS

1. SCOPE

1.1 This **renews** Notice of Acceptance No. 98-0930.07, which was issued on February, 8, 1999. It renews the approval of an inswing wood patio door, as described in Section 2 of this Notice of Acceptance, designed to comply with the South Florida Building Code, 1994 Edition for Miami-Dade County, for the locations where the pressure requirements, as determined by SFBC Chapter 23, do not exceed the Design Pressure Rating values indicated in the approved drawings.

2. PRODUCT DESCRIPTION

2.1 The **Series FWH 3168 Inswing Wood Patio Door** and its components shall be constructed in strict compliance with the following documents: Drawing No. **DADE-52078**, Sheets 1 through 3 of 3, titled "UNIT, FWH SINGLE," prepared by Andersen Corporation, dated 9-11-98, signed and sealed by Richard Boyette, P.E., bearing the Miami-Dade County Product Control renewal stamp with the Notice of Acceptance number and expiration date by the Miami-Dade County Product Control Division. These documents shall hereinafter be referred to as the approved drawings.

3. LIMITATIONS

3.1 This approval applies to single unit applications of single door only, as shown in approved drawings.

4. INSTALLATION

4.1 The inswing wood patio door and its components shall be installed in strict compliance with the approved drawings.

4.2 Hurricane protection system (shutters): the installation of this unit **will require** a hurricane protection system.

5. LABELING

5.1 Each panel shall bear a permanent label with the manufacturer's name or logo, city, state and following statement: "Miami-Dade County Product Control Approved".

6. BUILDING PERMIT REQUIREMENTS

6.1 Application for building permit shall be accompanied by copies of the following:

- **6.1.1** This Notice of Acceptance.
- **6.1.2** Duplicate copies of the approved drawings, as identified in Section 2 of this Notice of Acceptance, clearly marked to show the components selected for the proposed installation.
- **6.1.3** Any other documents required by the Building Official or the South Florida Building Code (SFBC) in order to properly evaluate the installation of this system.

Raul Rodriguez, Chief
Product Control Division

Andersen Corporation

ACCEPTANCE No. : **01-0803.06**

APPROVED : SEP 0 6 2001

EXPIRES : **September 30, 2006**

NOTICE OF ACCEPTANCE: STANDARD CONDITIONS

1 Renewal of this Acceptance (approval) shall be considered after a renewal application has been filed and the original submitted documents, including test-supporting data, engineering documents, are no older than eight (8) years.

2. Any and all approved products shall be permanently labeled with the manufacturer's name, city, state, and the following statement: "Miami-Dade County Product Control Approval", or as specifically stated in the specific conditions of this Acceptance.

3. Renewals of Acceptance will not be considered if:
   a. There has been a change in the South Florida Building Code affecting the evaluation of this product and the product is not in compliance with the code changes.
   b. The product is no longer the same product (identical) as the one originally approved.
   c. If the Acceptance holder has not complied with all the requirements of this acceptance, including the correct installation of the product.
   d. The engineer who originally prepared, signed and sealed the required documentation initially submitted, is no longer practicing the engineering profession.

4. Any revision or change in the materials, use, and/or manufacture of the product or process shall automatically be cause for termination of this Acceptance, unless prior written approval has been requested (through the filing of a revision application with appropriate fee) and granted by this office.

5. Any of the following shall also be grounds for removal of this Acceptance:
   a. Unsatisfactory performance of this product or process.
   b. Misuse of this Acceptance as an endorsement of any product, for sales, advertising or any other purposes.

6. The Notice of Acceptance number preceded by the words Miami-Dade County, Florida, and followed by the expiration date may be displayed in advertising literature. If any portion of the Notice of Acceptance is displayed, then it shall be done in its entirety.

7. A copy of this Acceptance as well as approved drawings and other documents, where it applies, shall be provided to the user by the manufacturer or its distributors and shall be available for inspection at the job site at all time. The engineer need not reseal the copies.

8. Failure to comply with any section of this Acceptance shall be cause for termination and removal of Acceptance.

9. This Notice of Acceptance consists of pages 1, 2 and this last page 3.

END OF THIS ACCEPTANCE

Raul Rodriguez, Chief
Product Control Division

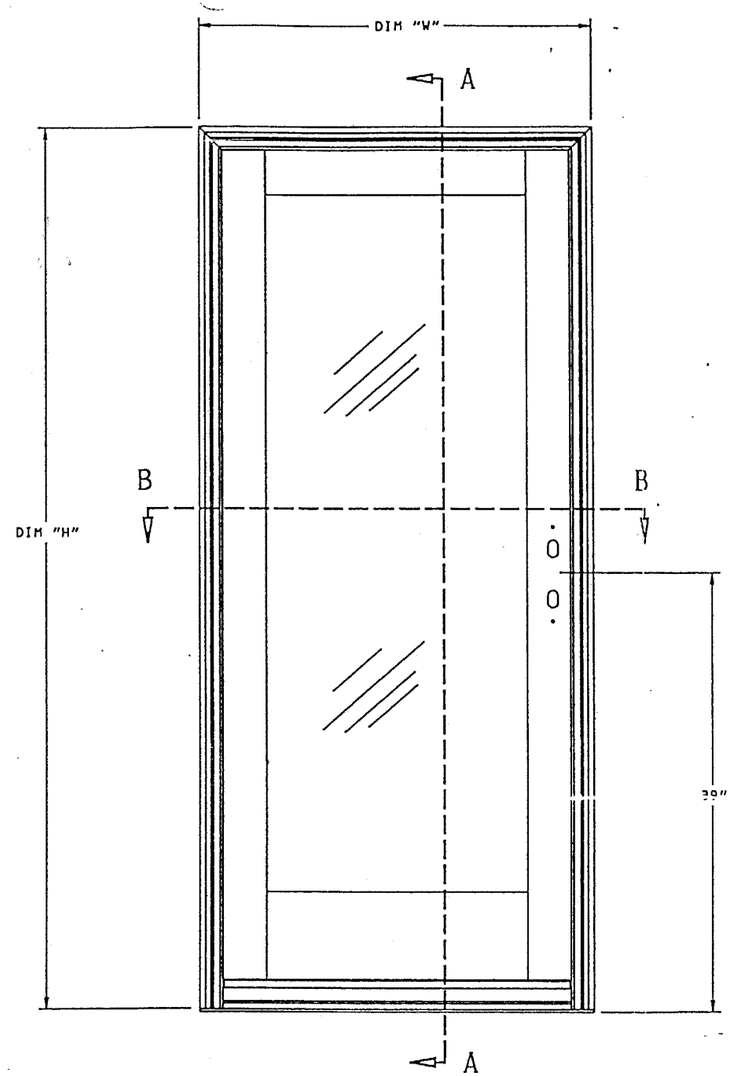

VIEWED FROM EXTERIOR

FWH-3168	36.125	79.500
FWH-2968	32.125	79.500
FWH-2768	30.125	79.500
UNIT DES.	DIM "W"	DIM "H"

FWH-3168	3
FWH-2968	2
FWH-2768	2
UNIT DES.	# OF SCREWS THROUGH HEAD JAMB

FWH-3168	33.750	76.469
FWH-2968	29.750	76.469
FWH-2768	27.750	76.469
PANEL DES.	WIDTH	HEIGHT
PANEL DIMENSIONS		

FWH-3168	5
FWH-2968	4
FWH-2768	4
UNIT DES.	# OF SCREWS THROUGH RIGHT JAMB

FWH-3168	9
FWH-2968	7
FWH-2768	7
UNIT DES.	# OF SCREWS THROUGH LEFT JAMB

6	SCREWS, #10 X 1.00"	ATTACHMENT OF RECEIVER ASSEMBLY TO FRAME
6	SCREWS, #10 X 1.00"	ATTACHMENT OF HINGES TO FRAME
4	STAPLES, 5/16" X 1/2"	ATTACHMENT OF HEAD JAMB COVER TO JAMB
5	NAIL, 1.500" GALV. FINISH	ATTACHMENT OF INSIDE HEAD & SILL GLASS STOPS TO FRAME
10	NAIL, 1.500" GALV. FINISH	ATTACHMENT OF INSIDE SIDE GLASS STOPS TO FRAME
6-8	SCREWS, BRASS #8 X 1.500"	ATTACHMENT OF SILL STEP TO SILL
4	SCREWS, #7 X .625"	ATTACHMENT OF CORNERLOCKS TO HEAD & SIDE JAMBS
8	SCREWS, #10 X 2.500"	ATTACHMENT OF FRAME HEAD JAMB TO SIDE JAMBS
6	SCREWS, #10 X 2.500"	ATTACHMENT OF SILL TO ASTRAGAL OUTSIDE COVER
BEAD	SILICONE	ATTACHMENT OF FRAME HEAD JAMBS TO SIDE JAMBS & TO JAMB COVER/DRAINAGE CHANNEL OVERLAP
QTY.	DESCRIPTION	LOCATION
FRAME FASTENERS LIST		

12	SCREWS, #10 X 1-3/4"	ATTACHMENT OF HINGES TO PANEL
13	SCREWS, #8 FLAT HEADS	ATTACHMENT OF LOCK MECHANISM TO PANEL
2	DOWELS, DIA .438 X 5.000"	ATTACHMENT OF BOTTOM RAIL TO STILES
2	DOWELS, DIA .438 X 5.000"	ATTACHMENT OF TOP RAIL TO STILES
BEAD	SILICONE	ATTACHMENT OF GASKET TO PANEL
QTY.	DESCRIPTION	LOCATION
PANEL FASTENERS LIST		

NOTES:

1. INSTALLATION METHODS:
   THE SILL IS SET IN SILICONE BACKBEDDING. THE HEAD IS SECURED IN THE ROUGH OPENING USING #10 X 3" FLAT HEAD SCREWS AT 6" FROM CORNERS AND A MAX. OF 22" O.C. THE JAMBS ARE SECURED USING #10 X 3" FLAT HEAD SCREWS AT 6" FROM CORNERS AND A MAX. OF 22" O.C.. TWO #10 X 3" SCREWS ARE SCREWED INTO EACH OF THE THREE HINGES. FOUR #10 X 3" SCREWS ARE FASTENED THROUGH THE LOCK KEEPER AND JAMBS AND ARE LOCATED ONE PER TOP AND BOTTOM KEEPER. AND TWO PER MIDSPAN KEEPER.
2. DESIGN PRESSURE RATINGS FOR ALL SIZES = +60.0 PSF/-66.7 PSF.
3. GLAZING SPECIFICATIONS:
   THE PANEL UNTILIZES NOMINAL 3/4" HIGH PERFORMANCE INSULATING GLASS FABRICATED FROM TWO NOMINAL 5/32" TEMPERED SHEETS AND A DESICCANT FILLED SPACER SYSTEM.

   GLAZING METHOD: GLASS IS SET FROM THE INTERIOR AGAINST THE SILICONE BACKBEDDING AND THEN WOOD GLAZING STOPS ARE USED ON THE INTERIOR, SECURED WITH 1-1/4" FINISHING NAILS SPACED 8" ON CENTER.

   GLASS BITE = .563".
4. FRAME CONSTRUCTION:
   CORNERS ARE COPED. BUTTED, GLUED AND THEN FASTENED USING FOUR #10 X 2-1/2" LONG SCREWS PER HEAD JAMB CORNER AND THREE #10 X 2-1/2" LONG SCREWS PER SILL JAMB CORNER.
5. PANEL CONSTRUCTION:
   THE WOOD PANELS CONTAIN BLIND MORTISE AND TENON, DOWEL AND GLUED CORNER CONSTRUCTION.
6. WEATHERSTRIPPING:
   ONE ROW OF SANTOPRENE BULB AT THE PERIMETER OF THE PANEL.
7. MIAMI-DADE COUNTY APPROVED IMPACT RESISTANT SHUTTERS ARE REQUIRED FOR INSTALLATION OF THIS UNIT.

PRODUCT RENEWED

ACCEPTANCE No. 01-0830.06

EXPIRATION DATE September 30, 2006

By

PRODUCT CONTROL DIVISION
BUILDING CODE COMPLIANCE OFFICE

APPROVED AS COMPLYING WITH THE SOUTH FLORIDA BUILDING CODE

DATE February 18, 1999

BY

PRODUCT CONTROL DIVISION
BUILDING CODE COMPLIANCE OFFICE

ACCEPTANCE NO. 98-0930.07

RICHARD BOYETTE
FL Civil PE #42485
4031 Coconut Blvd
Royal Palm Bch FL 33411
(561) 790-5766 Voice / Fax

2/16/99

TITLE
UNIT, FWH SINGLE

Andersen Corporation
Bayport, Minnesota 55003

THESE DRAWINGS ARE PROVIDED AS A SERVICE BY ANDERSEN CORPORATION FOR THE BENEFIT OF ITS CUSTOMERS. FINAL RESPONSIBILITY FOR ACCURACY OF DESIGN, FINAL SPECIFICATIONS, DRAWINGS AND FOR THE ACTUAL INSTALLATION SUGGESTED BY THESE DRAWINGS LIES WITH THE ARCHITECT, ENGINEER AND/OR CONTRACTOR.

COPYRIGHT ANDERSEN CORPORATION 1998. ALL RIGHTS RESERVED.

APPROVE/DATE 9-11-98

DRAWING NUMBER DADE-52078

SHT. 1 OF 3

FWH-3168	26.000	24.875	36.125
FWH-2968	22.000	20.875	32.125
FWH-2768	20.000	18.875	30.125
UNIT DES.	GLASS DIMENSION	DAYLIGHT OPENING	UNIT DIMENSION
WIDTH			

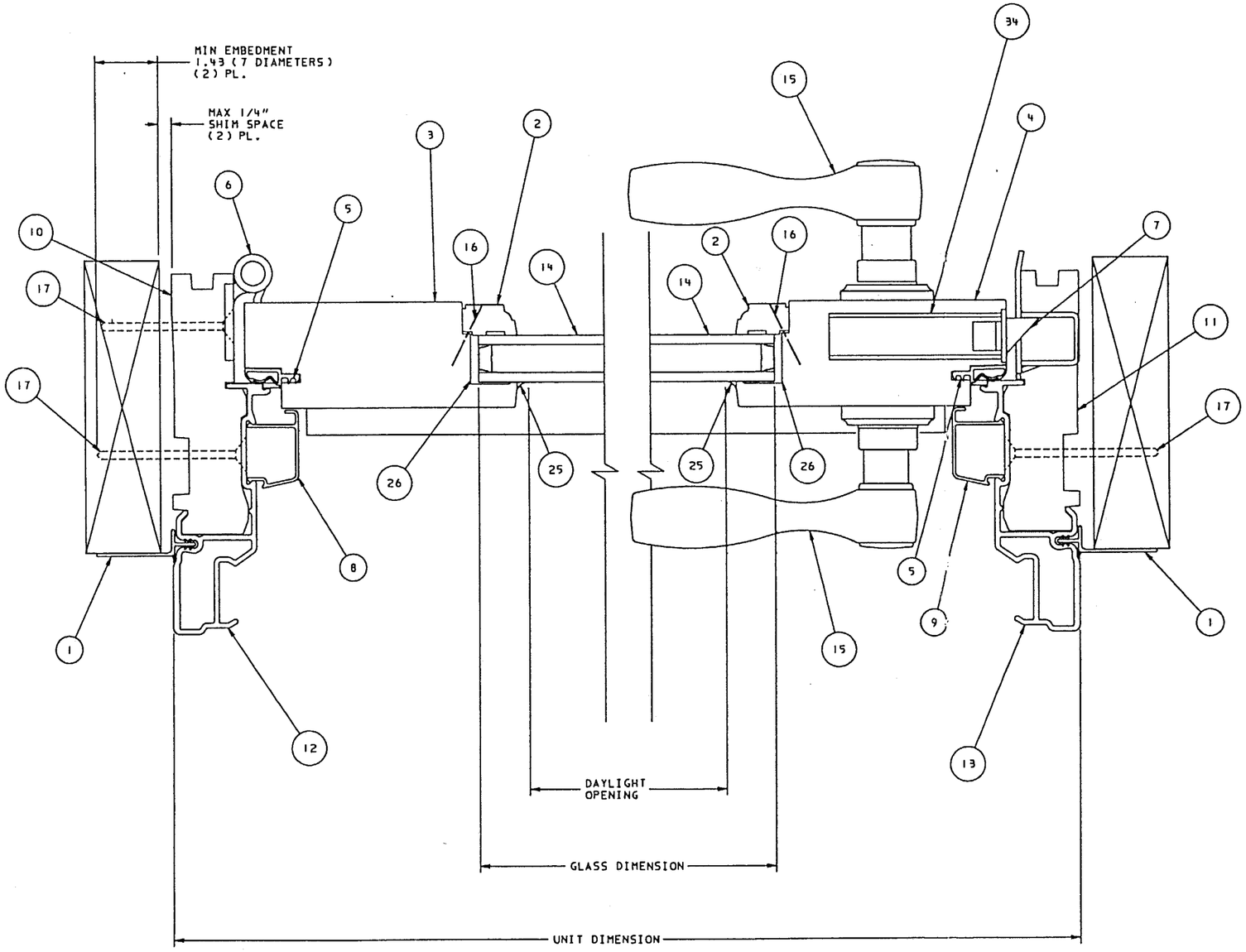

SECTION B-B

ITEM NO.	DESCRIPTION	DRAWING	MATERIAL	HEIGHT	WIDTH
35	SCREW, #10 X 2.500"	3621230	STEEL	-	-
34	LATCH, RECEIVER	52443	CRS 1010	.973	1.642
33	FLANGE, HEAD	20031	VINYL	2.344	.671
32	SCREW, #6 X .750	3621280	STEEL	-	-
31	STOP, PANEL HEAD & SILL	51126	WOOD	.500	.875
30	JAMB, HEAD	52358	WOOD	1.104	4.232
29	COVER, HEAD JAMB	52225	ALUMINUM	1.375	4.093
28	COVER, FASTENER HEAD	52248	ALUMINUM	.836	1.285
27	RAIL, TOP	29074	WOOD	4.438	1.719
26	SPACER, GLASS	20065	VINYL	.781	2.000
25	SEALANT, SILICONE	-	DC 791	-	-
24	RAIL, BOTTOM	52179	WOOD	8.594	1.719
23	WATERSHED	52203	ALUMINUM	.875	.672
22	SCREW, #8 X 1-1/2	3621310	BRASS	-	-
21	STEP, SILL	52129	OAK	.765	1.782
20	CHANNEL, DRAINAGE	52126	ALUMINUM	1.200	.530
19	COVER, SILL	52127	ALUMINUM	1.430	4.823
18	SILL	52433	FIBREX	1.062	3.125
17	SCREW #10 X 3"	3621330	STEEL	-	-
16	NAIL, FINISH 1-1/2"	4235290	GALVANIZED	-	-
15	HANDLE	-	BRASS	-	-
14	GLASS	-	-	-	-
13	COVER, JAMB RH	52225	PULTRUSION	1.375	4.093
12	COVER, JAMB LH	52225	PULTRUSION	1.375	4.093
11	JAMB, RH	52253	WOOD	1.234	4.232
10	JAMB, LH	52253	WOOD	1.234	4.232
9	COVER, FASTENER RH	52248	ALUMINUM	.836	1.265
8	COVER, FASTENER LH	52248	ALUMINUM	.836	1.265
7	MECHANISM, LOCK	52104	STEEL	-	-
6	HINGE, LEAF	52389-90	ZINC DICAST	-	-
5	W.S., GASKET	52175	SANTOPRENE	.385	.325
4	STILE, LOCK	52178	WOOD	4.438	1.719
3	STILE, HINGE	52178	WOOD	4.438	1.719
2	STOP, PANEL SIDE	51125	WOOD	.500	.875
1	FLANGE, SIDE	50347	VINYL	1.644	.430

DRAWING REFERENCE LIST

PRODUCT RENEWED

ACCEPTANCE No. 01-0830.06

EXPIRATION DATE September 30, 2006

By

PRODUCT CONTROL DIVISION
BUILDING CODE COMPLIANCE OFFICE

APPROVED AS COMPLYING WITH THE SOUTH FLORIDA BUILDING CODE

DATE February 18 19 99

BY

PRODUCT CONTROL DIVISION
BUILDING CODE COMPLIANCE OFFICE

ACCEPTANCE NO. 98-0930.07

RICHARD BOYETTE
FL Civil PE #42485
4031 Coconut Blvd
Royal Palm Bch FL 33411
(561) 790-5766 Voice / Fax

1/16/99

TITLE
UNIT, FWH SINGLE

Andersen Corporation
Bayport, Minnesota 55003

THESE DRAWINGS ARE PROVIDED AS A SERVICE BY ANDERSEN CORPORATION FOR THE BENEFIT OF ITS CUSTOMERS. FINAL RESPONSIBILITY FOR ACCURACY OF DESIGN, FINAL SPECIFICATIONS, DRAWINGS AND FOR THE ACTUAL INSTALLATION SUGGESTED BY THESE DRAWINGS LIES WITH THE ARCHITECT, ENGINEER AND/OR CONTRACTOR.

COPYRIGHT ANDERSEN CORPORATION 1998. ALL RIGHTS RESERVED.

APPROVE/DATE 9-11-98

DRAWING NUMBER DADE-52078

SHT. 2 OF 3

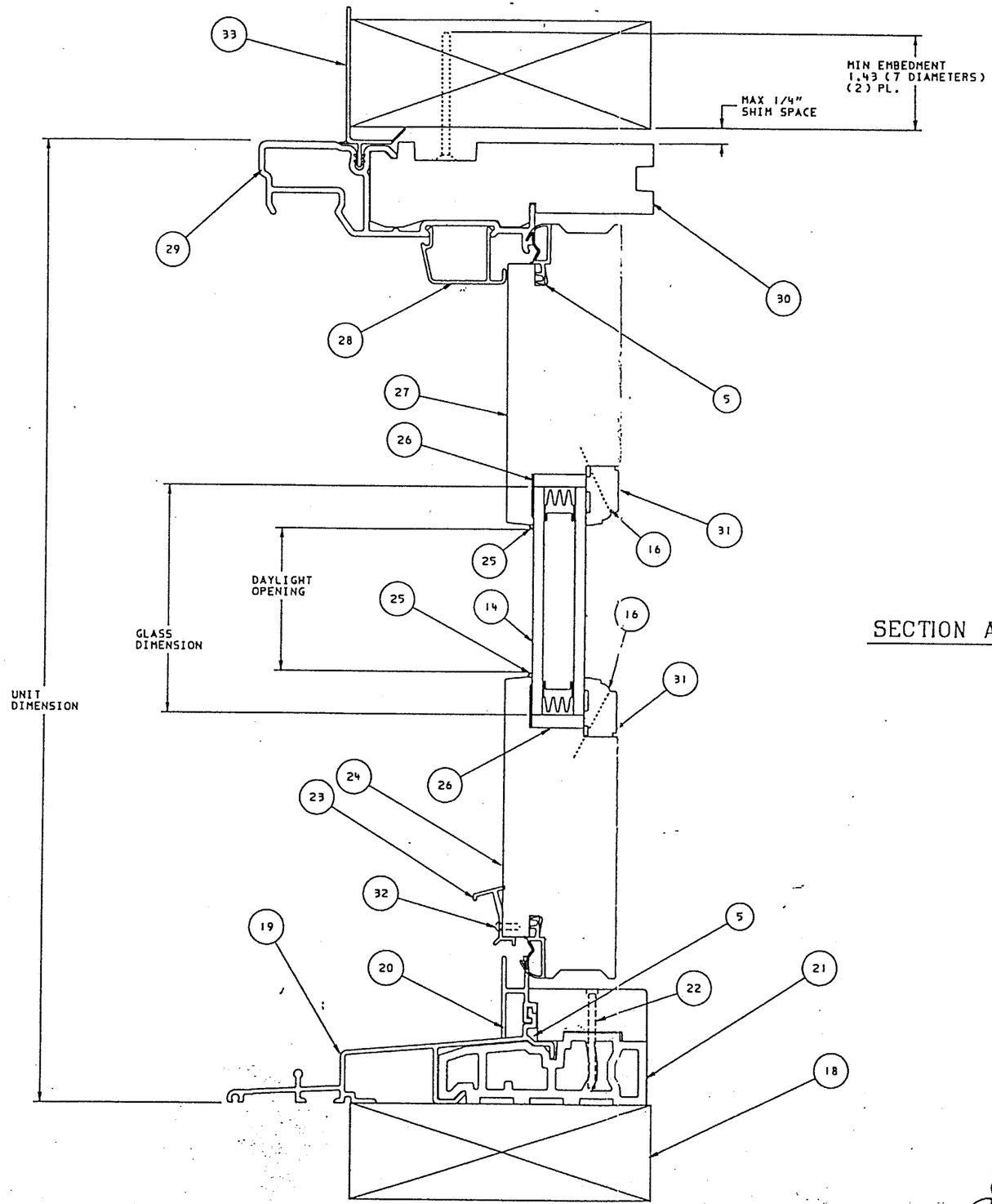

FWH-3168	64.562	63.500	79.500
FWH-2968	64.562	63.500	79.500
FWH-2768	64.562	63.500	79.500
UNIT DES.	GLASS DIMENSION	DAYLIGHT OPENING	UNIT DIMENSION
HEIGHT			

SECTION A-A

PRODUCT RENEWED

ACCEPTANCE No. 01-0830.06

EXPIRATION DATE September 30 2006

By

PRODUCT CONTROL DIVISION
BUILDING CODE COMPLIANCE OFFICE

APPROVED AS COMPLYING WITH THE
SOUTH FLORIDA BUILDING CODE
DATE February 18 19 99
BY
PRODUCT CONTROL DIVISION
BUILDING CODE COMPLIANCE OFFICE
ACCEPTANCE NO. 98-0930.07

RICHARD BOYETTE
FL Civil PE #42485
4031 Coconut Blvd
Royal Palm Bch FL 33411
(561) 790-5766 Voice / Fax

-1/6/99

TITLE
UNIT, FWH SINGLE

Andersen Corporation
Bayport, Minnesota 55003

THESE DRAWINGS ARE PROVIDED AS A SERVICE BY ANDERSEN CORPORATION FOR THE BENEFIT OF ITS CUSTOMERS. FINAL RESPONSIBILITY FOR ACCURACY OF DESIGN, FINAL SPECIFICATIONS, DRAWINGS AND FOR THE ACTUAL INSTALLATION SUGGESTED BY THESE DRAWINGS LIES WITH THE ARCHITECT, ENGINEER AND/OR CONTRACTOR.

COPYRIGHT ANDERSEN CORPORATION 1998. ALL RIGHTS RESERVED.

APPROVE/DATE
9-11-98

DRAWING NUMBER
DADE-52078