MIAMI-DADE

MIAMI-DADE COUNTY, FLORIDA
METRO-DADE FLAGLER BUILDING

BUILDING CODE COMPLIANCE OFFICE
METRO-DADE FLAGLER BUILDING
140 WEST FLAGLER STREET, SUITE 1603
MIAMI, FLORIDA 33130-1563
(305) 375-2901 FAX (305) 375-2908

CONTRACTOR LICENSING SECTION
(305) 375-2527 FAX (305) 375-2558

CONTRACTOR ENFORCEMENT DIVISION
(305) 375-2966 FAX (305) 375-2908

PRODUCT CONTROL DIVISION
(305) 375-2902 FAX (305) 372-6339

PRODUCT CONTROL NOTICE OF ACCEPTANCE

Andersen Corporation
100 Fourth Avenue North
Bayport ,MN 55003-1096

Your application for Notice of Acceptance (NOA) of:
FWG 6068 Wood Sliding Glass Door (Reinforced)
under Chapter 8 of the Code of Miami-Dade County governing the use of Alternate Materials and Types of Construction, and completely described herein, has been recommended for acceptance by the Miami-Dade County Building Code Compliance Office (BCCO) under the conditions specified herein.

This NOA shall not be valid after the expiration date stated below. BCCO reserves the right to secure this product or material at any time from a jobsite or manufacturer's plant for quality control testing. If this product or material fails to perform in the approved manner, BCCO may revoke, modify, or suspend the use of such product or material immediately. BCCO reserves the right to revoke this approval, if it is determined by BCCO that this product or material fails to meet the requirements of the South Florida Building Code.

The expense of such testing will be incurred by the manufacturer.

ACCEPTANCE NO.: 01-0803.10
EXPIRES: 09/30/2006

Raul Rodriguez
Chief Product Control Division

THIS IS THE COVERSHEET, SEE ADDITIONAL PAGES FOR SPECIFIC AND GENERAL CONDITIONS
BUILDING CODE & PRODUCT REVIEW COMMITTEE

This application for Product Approval has been reviewed by the BCCO and approved by the Building Code and Product Review Committee to be used in Miami-Dade County, Florida under the conditions set forth above.

Francisco J. Quintana, R.A.
Director
Miami-Dade County
Building Code Compliance Office

APPROVED: 09/06/2001

MIAMI-DADE

MIAMI-DADE COUNTY, FLORIDA
METRO-DADE FLAGLER BUILDING

BUILDING CODE COMPLIANCE OFFICE
METRO-DADE FLAGLER BUILDING
140 WEST FLAGLER STREET, SUITE 1603
MIAMI, FLORIDA 33130-1563
(305) 375-2901 FAX (305) 375-2908

CONTRACTOR LICENSING SECTION
(305) 375-2527 FAX (305) 375-2558

CONTRACTOR ENFORCEMENT DIVISION
(305) 375-2966 FAX (305) 375-2908

PRODUCT CONTROL DIVISION
(305) 375-2902 FAX (305) 372-6339

PRODUCT CONTROL NOTICE OF ACCEPTANCE

Andersen Corporation
100 Fourth Avenue North
Bayport ,MN 55003-1096

Your application for Notice of Acceptance (NOA) of:
FWG 6068 Wood Sliding Glass Door (Reinforced)
under Chapter 8 of the Code of Miami-Dade County governing the use of Alternate Materials and Types of Construction, and completely described herein, has been recommended for acceptance by the Miami-Dade County Building Code Compliance Office (BCCO) under the conditions specified herein.

This NOA shall not be valid after the expiration date stated below. BCCO reserves the right to secure this product or material at any time from a jobsite or manufacturer's plant for quality control testing. If this product or material fails to perform in the approved manner, BCCO may revoke, modify, or suspend the use of such product or material immediately. BCCO reserves the right to revoke this approval, if it is determined by BCCO that this product or material fails to meet the requirements of the South Florida Building Code.

The expense of such testing will be incurred by the manufacturer.

ACCEPTANCE NO.: 01-0803.10
EXPIRES: 09/30/2006

Raul Rodriguez
Chief Product Control Division

THIS IS THE COVERSHEET, SEE ADDITIONAL PAGES FOR SPECIFIC AND GENERAL CONDITIONS
BUILDING CODE & PRODUCT REVIEW COMMITTEE

This application for Product Approval has been reviewed by the BCCO and approved by the Building Code and Product Review Committee to be used in Miami-Dade County, Florida under the conditions set forth above.

Francisco J. Quintana, R.A.
Director
Miami-Dade County
Building Code Compliance Office

APPROVED: 09/06/2001

Andersen Corporation

ACCEPTANCE No.: **01-0803.10**

APPROVED : SEP 0 6 2001

EXPIRES : **September 30, 2006**

NOTICE OF ACCEPTANCE: SPECIFIC CONDITIONS

1. SCOPE

1.1 This renews Notice of Acceptance No. 00-0508.10, which was issued on December 7, 2000. It renews the approval of a wood sliding glass door, as described in Section 2 of this Notice of Acceptance, designed to comply with the South Florida Building Code, 1994 Edition for Miami-Dade County, for the locations where the pressure requirements, as determined by SFBC Chapter 23, do not exceed the Design Pressure Rating values indicated in the approved drawings.

2. PRODUCT DESCRIPTION

2.1 The **Series "FWG 6068 Frenchwood Gliding" Wood Sliding Glass Door (XO) (Reinforced)** and its components shall be constructed in strict compliance with the following document: Drawing No. **DADE-51170-R,** titled "UNIT, FWG 68 REINFORCED", Sheets 1 thru 3 of 3, dated 2/7/00, signed and sealed by Richard Boyette, P.E., bearing the Miami-Dade County Product Control renewal stamp with the Notice of Acceptance number and expiration date by the Miami-Dade County Product Control Division. These documents shall hereinafter be referred to as the approved drawings.

3. LIMITATIONS

3.1 This approval applies to single unit applications of a wood sliding glass door, as shown approved drawings.

4. INSTALLATION:

4.1 The wood sliding glass door and its components shall be installed in strict compliance with the approved drawings.

4.2 Hurricane protection system (shutters): the installation of this unit **will require** a hurricane protection system.

5. LABELING

5.1 Each unit shall bear a permanent label with the manufacturer's name or logo, city, state and following statement: "Miami-Dade County Product Control Approved".

6. BUILDING PERMIT REQUIREMENTS

6.1 Application for building permit shall be accompanied by two copies of the following:

6.1.1 This Notice of Acceptance.

6.1.2 Duplicate copies of the approved drawings, as identified in section 2 of this Notice of Acceptance, clearly marked to show the components selected for the proposed installation.

6.1.3 Any other documents required by the Building Official or the South Florida Building Code (SFBC) in order to properly evaluate the installation of this system.

Raul Rodriguez, Chief
Product Control Division

Andersen Corporation

ACCEPTANCE No.: **01-0803.10**

APPROVED : SEP 0 6 2001

EXPIRES : **September 30, 2006**

NOTICE OF ACCEPTANCE: STANDARD CONDITIONS

1. Renewal of this Acceptance (approval) shall be considered after a renewal application has been filed and the original submitted documentation, including test supporting data, engineering documents, are no older than eight (8) years.

2. Any and all approved products shall be permanently labeled with the manufacturer's name, city, state, and the following statement: "Miami-Dade County Product Control Approved", or as specifically stated in the specific conditions of this Acceptance.

3. Renewals of Acceptance will not be considered if:
   a) There has been a change in the South Florida Building Code affecting the evaluation of this product and the product is not in compliance with the code changes;
   b) The product is no longer the same product (identical) as the one originally approved.
   c) If the Acceptance holder has not complied with all the requirements of this acceptance, including the correct installation of the product;
   d) The engineer who originally prepared, signed and sealed the required documentation initially submitted , is no longer practicing the engineering profession.

4. Any revision or change in the materials, use, and/or manufacture of the product or process shall automatically be cause for termination of this Acceptance, unless prior written approval has been requested (through the filing of a revision application with appropriate fee) and granted by this office.
5. Any of the following shall also be grounds for removal of this Acceptance:
   a) Unsatisfactory performance of this product or process;
   b) Misuse of this Acceptance as an endorsement of any product, for sales, advertising or any other purpose.

6. The Notice of Acceptance number preceded by the words Dade County, Florida, and followed by the expiration date may be displayed in advertising literature. If any portion of the Notice of Acceptance is displayed, then it shall be done in its entirety.

7. A copy of this Acceptance as well as approved drawings and other documents, where it applies, shall be provided to the user by the manufacturer or its distributors and shall be available for inspection at the job site at all times. The engineer does not need to reseal the copies.

8. Failure to comply with any section of this Acceptance shall be cause for termination and removal of Acceptance.

9. This Acceptance contains pages 1, 2 and this last page 3.

Raul Rodriguez, Chief
Product Control Division

END OF THIS ACCEPTANCE

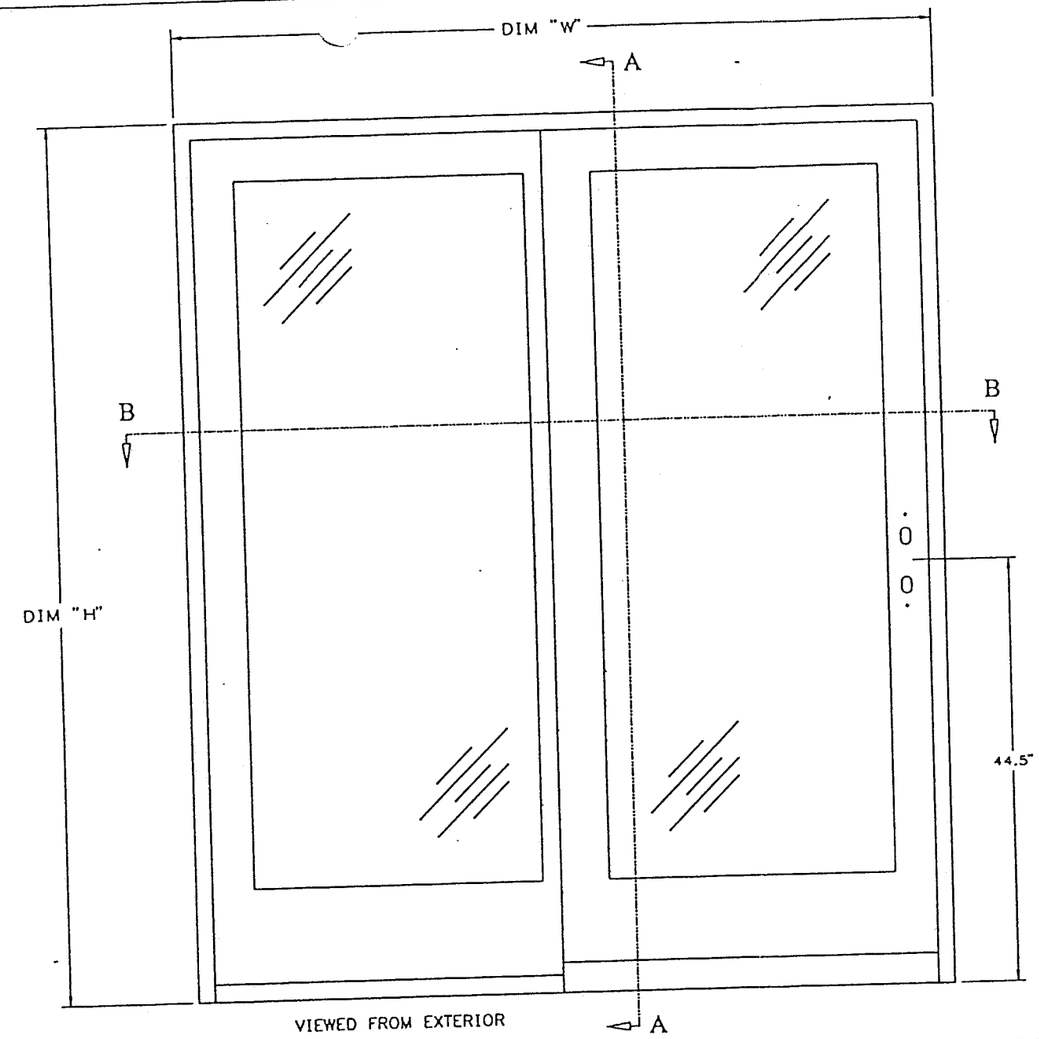

FWG-6068	71.250	79.500
FWG-5068	59.250	79.500
UNIT DES.	DIM "W"	DIM "H"

FWG-6068	36.000	76.141
FWG-5068	30.000	76.141
PANEL DES.	WIDTH	HEIGHT

PANEL DIMENSIONS

FWG-6068	7
FWG-5068	7
UNIT DES.	# OF SCREWS THROUGH EACH SIDE JAMB

FWG-6068	6
FWG-5068	5
UNIT DES.	# OF SCREWS THROUGH HEAD JAMB

QTY.	DESCRIPTION	LOCATION
2	DOWELS, DIA .438 X 6.500"	ATTACHMENT OF BOTTOM RAIL TO STILES
2	DOWELS, DIA .438 X 5.000"	ATTACHMENT OF TOP RAIL TO STILES
BEAD	SILICONE	ATTACHMENT OF SILL TO ROUGH OPENING
BEAD	SILICONE	ATTACHMENT OF SIDE JAMBS TO HEAD & SILL
1	BRACKET	ATTACHMENT OF STATIONARY PANEL TO FRAME
18	SCREWS #7 X .625"	ATTACHMENT OF MEETING STILE W.S. TO PANELS
7-9	SCREWS, BRASS #8 X 1.500"	ATTACHMENT OF INSIDE STOP TO HEAD JAMB
5	SCREWS, #8 X 1"	ATTACHMENT OF BRACKET TO STATIONARY PANEL & HEAD JAMB
4	SCREWS, #8 X 1.000"	ATTACHMENT OF STATIONARY PANEL TO SILL FILLER
14	SCREWS, #10 X 2.500"	ATTACHMENT OF SIDE JAMBS TO HEAD JAMBS & TO THE SILL

FRAME & PANEL FASTENERS LIST

PRODUCT RENEWED

ACCEPTANCE No. 01-0803.10

EXPIRATION DATE September 30, 2006

By

PRODUCT CONTROL DIVISION
BUILDING CODE COMPLIANCE OFFICE

APPROVED AS COMPLYING WITH THE
SOUTH FLORIDA BUILDING CODE
DATE December 07, 2000
BY
PRODUCT CONTROL DIVISION
BUILDING CODE COMPLIANCE OFFICE
ACCEPTANCE NO. 00-0508.10

NOTES:

1. INSTALLATION METHODS:
   THE SILL IS SET IN SILICONE BACKBEDDING. THE JAMBS ARE SECURED WITH SEVEN #10 X 2-1/2" SCREWS THROUGH EACH JAMB INTO OPENING SPACED 10" FROM THE SILL, HEAD, AND THE REST SPACED AT 12" O.C..

   THE HEAD IS SECURED WITH FIVE #10 X 2-1/2" (FOR 5068 SIZES) AND SIX #10 X 2-1/2" (FOR 6068 SIZES) SCREWS THROUGH HEAD INTO OPENING SPACED 8" FROM EACH JAMB AND THE REST SPACED AT 12" O.C..
2. STRUCTURAL DESIGN PRESSURE RATINGS FOR ALL SIZES = +50 PSF/-55 PSF.
3. GLAZING SPECIFICATIONS:
   THE PANELS UNTILIZE NOMINAL 3/4" HIGH PERFORMANCE INSULATING GLASS FABRICATED FROM TWO NOMINAL 5/32" TEMPERED SHEETS AND A DESICCANT FILLED SPACER SYSTEM.

   GLAZING METHOD: GLASS IS SET FROM THE INTERIOR AGAINST THE SILICONE BACKBEDDING AND THEN WOOD GLAZING STOPS ARE USED ON THE INTERIOR, SECURED WITH 1-1/4" FINISHING NAILS SPACED 8" ON CENTER.

   GLASS BITE = .563".
4. FRAME CONSTRUCTION:
   CORNERS ARE COPED, BUTTED, GLUED AND THEN FASTENED USING FOUR #10 X 2-1/2" LONG SCREWS PER HEAD JAMB CORNER AND THREE #10 X 2-1/2" LONG SCREWS PER SILL JAMB CORNER. THE SILL INSERTS BELOW THE STATIONARY PANEL ARE REINFORCED WITH THREE 2" X 3/8" RIBBED ALUMINUM ANGLES POSITIONED 2", 24" AND 32" FROM FRAME JAMB AND IS SECURED TO THE SILL WITH FOUR #10 X 1" SCREWS.
5. PANEL CONSTRUCTION:
   THE WOOD PANELS CONTAIN BLIND MORTISE AND TENON, DOWEL AND GLUED CORNER CONSTRUCTION. THE STATIONARY PANEL WAS SECURED TO THE FRAME WITH FOUR #8 X 1" SCREWS THROUGH THE SILL INSERT FLANGE INTO THE PANEL. THE TOP RAIL OF THE STATIONARY PANEL WAS SECURED TO THE FRAME WITH A 1-3/4" X BY 1-5/8" ANGLE METAL BRACKET. THE BRACKET WAS SECURED TO THE FRAME WITH TWO #8 X 1" SCREWS INTO THE PANEL & 3 #8 X 1" SCREWS INTO THE FRAME.

   THE OPERATING PANEL WAS HELD IN THE GUIDE TRACK USING A 1-1/2" X 1/2" WOOD GLIDE STOP WHICH WAS SECURED TO THE FRAME WITH #8 X 1/2" LONG SCREWS SPACED 7-1/2" ON CENTER.
6. WEATHERSTRIPPING:
   1" X 1/2" BY 1/2" CLOSED CELL FOAM, ONE (1), HEAD ABOVE MEETING STILE.
   2" BY 1-1/4" BY 1" CLOSED CELL FOAM, ONE (1), SILL ABOVE MEETING STILE.
   1" BY 3/4" BY 3/8" CLOSED CELL FOAM, ONE (1), SILL LOCKING JAMB CORNER.
7. MIAMI-DADE COUNTY APPROVED IMPACT RESISTANT SHUTTERS ARE REQUIRED FOR INSTALLATION OF THIS UNIT.

TITLE
UNIT, FWG 68 REINFORCED

Andersen Corporation
Bayport, Minnesota 55003

THESE DRAWINGS ARE PROVIDED AS A SERVICE BY ANDERSEN CORPORATION FOR THE BENEFIT OF ITS CUSTOMERS. FINAL RESPONSIBILITY FOR ACCURACY OF DESIGN, FINAL SPECIFICATIONS, DRAWINGS AND FOR THE ACTUAL INSTALLATION SUGGESTED BY THESE DRAWINGS LIES WITH THE ARCHITECT, ENGINEER AND/OR CONTRACTOR.

COPYRIGHT ANDERSEN CORPORATION 1998. ALL RIGHTS RESERVED.

APPROVE/DATE 2/7/00	DRAWING NUMBER DADE-51170-R
SHT. 1 OF 3	

FWG-6068	28.250	27.125	36.125
FWG-5068	22.250	21.125	30.125
UNIT DES.	GLASS DIMENSION	DAYLIGHT OPENING	UNIT DIMENSION
WIDTH			

ITEM	DESCRIPTION	DRAWING	MATERIAL	HEIGHT	WIDTH
38	SCREW, #7 X .625"	3621100	STEEL	–	–
	SCREW, #8 X 1.000"	3621[illegible]	STEEL	–	–
	SCREW, #8 X 1.500"	362[illegible]	STEEL	–	–
35	FLANGE, HEAD	50061	VINYL	–	–
34	GUIDE, SCREEN	50101	VINYL	1.125	.988
33	FLASHING, HEAD	50053	ALUMINUM	1.312	1.335
32	STOP, HEAD PARTING	51039	VINYL	1.030	.391
31	STOP, HEAD INSIDE	51047	VINYL	.750	.718
		51036	WOOD	.765	.719
30	RAIL, TOP STATIONARY	51021	WOOD	4.438	1.719
29	RAIL, TOP OPERATING	51021	WOOD	4.438	1.719
28	STOP, GLAZING RAILS	51126	WOOD	.500	.875
27	RAIL, BOTTOM RAIL STATIONARY	51020	WOOD	8.594	1.719
26	RAIL, BOTTOM RAIL OPERATING	51020	WOOD	8.594	1.719
25	ASSEMBLY, WHEEL	51052	STEEL	–	–
24	FILLER, BOTTOM RAIL OPERATING	51050	VINYL	.800	.731
23	BLOCK, RETAINING	51013	ALUMINUM	–	–
22	FILLER, SILL	50263	VINYL	2.300	1.774
21	SILL, INSIDE PIECE	50095	ALUMINUM	1.937	1.164
20	SILL, OUTSIDE PIECE	50154	ALUMINUM	.448	3.297
19	BREAK, THERMAL SILL	50354	VINYL	1.888	1.938
18	SCREW, #10 X 2.500"	3620470	STEEL	–	–
17	NAIL, FINISH 4D	–	STEEL	–	–
16	NAIL, FINISH 1.500"	–	STEEL	–	–
15	PLATE, STRIKE	2573562	STEEL	–	–
14	INTERLOCK, OPERATING	51019	VINYL	.738	1.925
13	INTERLOCK, STATIONARY	51148	VINYL	.738	1.144
12	LOCK, REACH OUT	2573588	STEEL	–	–
11	JAMB, OPERATING SIDE	50022	WOOD	5.875	1.375
10	JAMB, STATIONARY SIDE	50017	WOOD	5.875	1.375
9	TRIM, JAMB	51151	WOOD	3.141	.344
8	HANDLE	2573514-5	BRASS	–	–
7	SEALANT, SILICONE	–	DC 791	–	–
6	SPACER, GLASS	20065	FLEXIBLE	.781	2.000
5	GLASS, HP	00054	–	–	–
4	STILE, SIDE	51022	WOOD	4.438	1.719
3	STILE, TRIM	51152	WOOD	2.000	.367
2	STOP, GLAZING SIDE	51125	WOOD	.500	.875
1	FLANGE, SIDE	50347	VINYL	1.644	.430

DRAWING REFERENCE LIST

SECTION B-B

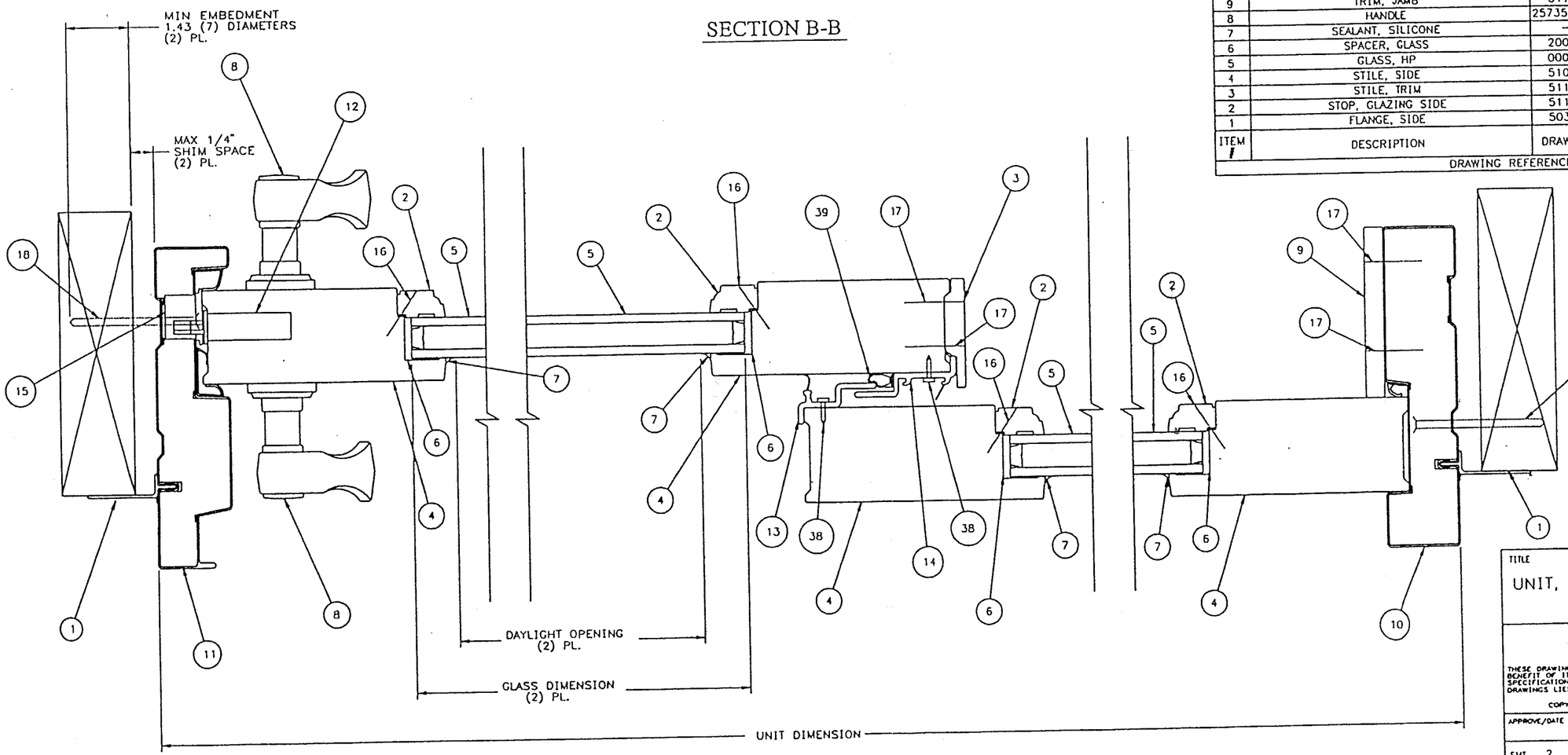

PRODUCT RENEWED

ACCEPTANCE No. 01-0803.10

EXPIRATION DATE September 30 2006

By

PRODUCT CONTROL DIVISION
BUILDING CODE COMPLIANCE OFFICE

APPROVED AS COMPLYING WITH THE
SOUTH FLORIDA BUILDING CODE
DATE December 07, 2000
BY Manuel Perez
PRODUCT CONTROL DIVISION
BUILDING CODE COMPLIANCE OFFICE
ACCEPTANCE NO. 00-0508.10

TITLE
UNIT, FWG 68 REINFORCED

Andersen Corporation
Bayport, Minnesota 55003

THESE DRAWINGS ARE PROVIDED AS A SERVICE BY ANDERSEN CORPORATION FOR THE BENEFIT OF ITS CUSTOMERS. FINAL RESPONSIBILITY FOR ACCURACY OF DESIGN, FINAL SPECIFICATIONS, DRAWINGS AND FOR THE ACTUAL INSTALLATION SUGGESTED BY THESE DRAWINGS LIES WITH THE ARCHITECT, ENGINEER AND/OR CONTRACTOR.

COPYRIGHT ANDERSEN CORPORATION 1998. ALL RIGHTS RESERVED.

APPROVE/DATE 2/7/00

DRAWING NUMBER DADE-51170-R

SHT. 2 OF 3

FWG-6068	64.250	63.125	79.500
FWG-5068	.250	63.125	79.500
UNIT DES.	GLASS DIMENSION	DAYLIGHT OPENING	UNIT DIMENSION
HEIGHT			

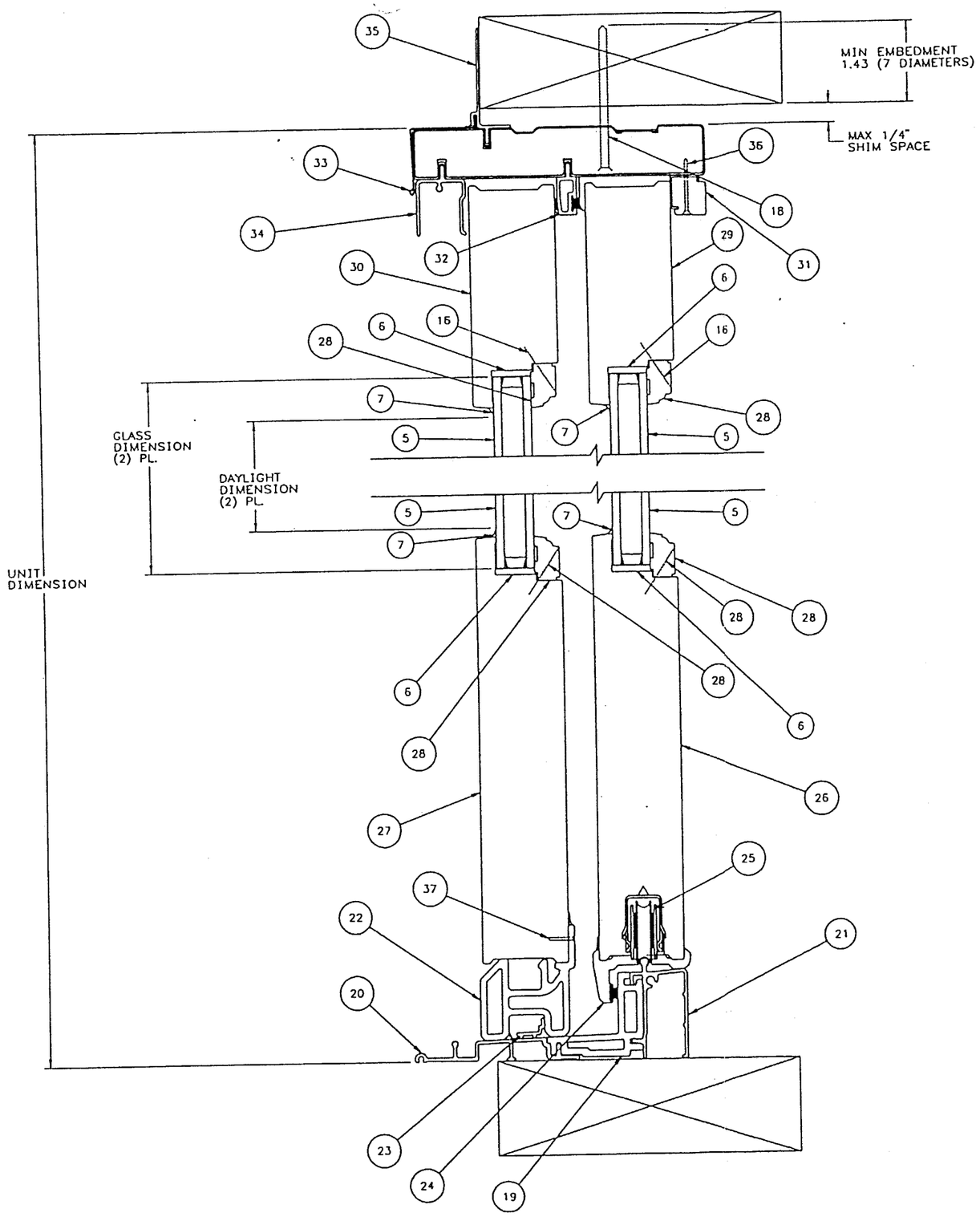

SECTION A-A

PRODUCT RENEWED

ACCEPTANCE No. 01-0803.10

EXPIRATION DATE September 30, 2006

By

PRODUCT CONTROL DIVISION
BUILDING CODE COMPLIANCE OFFICE

APPROVED AS COMPLYING WITH THE
SOUTH FLORIDA BUILDING CODE
DATE December 07, 2000
BY
PRODUCT CONTROL DIVISION
BUILDING CODE COMPLIANCE OFFICE
ACCEPTANCE NO. 00-0508.10

TITLE

UNIT, FWG 68 REINFORCED

Andersen Corporation
Bayport, Minnesota 55003

THESE DRAWINGS ARE PROVIDED AS A SERVICE BY ANDERSEN CORPORATION FOR THE BENEFIT OF ITS CUSTOMERS. FINAL RESPONSIBILITY FOR ACCURACY OF DESIGN, FINAL SPECIFICATIONS, DRAWINGS AND FOR THE ACTUAL INSTALLATION SUGGESTED BY THESE DRAWINGS LIES WITH THE ARCHITECT, ENGINEER AND/OR CONTRACTOR.

COPYRIGHT ANDERSEN CORPORATION 1998. ALL RIGHTS RESERVED.

APPROVE/DATE 2/7/00

DRAWING NUMBER DADE-51170-R

SHT. 3 OF 3