MIAMI-DADE COUNTY, FLORIDA
METRO-DADE FLAGLER BUILDING

BUILDING CODE COMPLIANCE OFFICE
METRO-DADE FLAGLER BUILDING
140 WEST FLAGLER STREET, SUITE 1603
MIAMI, FLORIDA 33130-1563
(305) 375-2901 FAX (305) 375-2908

CONTRACTOR LICENSING SECTION
(305) 375-2527 FAX (305) 375-2558

CONTRACTOR ENFORCEMENT DIVISION
(305) 375-2966 FAX (305) 375-2908

PRODUCT CONTROL DIVISION
(305) 375-2902 FAX (305) 372-6339

PRODUCT CONTROL NOTICE OF ACCEPTANCE

Parex, Inc.
1870 Stone Mountain - Lithonia Rd.
Redan ,GA 30058

Your application for Notice of Acceptance (NOA) of:
EIF Wall System on 5/8" Plywood Sheathing and Wood Frame
under Chapter 8 of the Code of Miami-Dade County governing the use of Alternate Materials and Types of Construction, and completely described herein, has been recommended for acceptance by the Miami-Dade County Building Code Compliance Office (BCCO) under the conditions specified herein.

This NOA shall not be valid after the expiration date stated below. BCCO reserves the right to secure this product or material at any time from a jobsite or manufacturer's plant for quality control testing. If this product or material fails to perform in the approved manner, BCCO may revoke, modify, or suspend the use of such product or material immediately. BCCO reserves the right to revoke this approval, if it is determined by BCCO that this product or material fails to meet the requirements of the South Florida Building Code.

The expense of such testing will be incurred by the manufacturer.

ACCEPTANCE NO.: 01-0803.15
EXPIRES: 08/20/2006

Raul Rodriguez
Chief Product Control Division

THIS IS THE COVERSHEET, SEE ADDITIONAL PAGES FOR SPECIFIC AND GENERAL CONDITIONS
BUILDING CODE & PRODUCT REVIEW COMMITTEE

This application for Product Approval has been reviewed by the BCCO and approved by the Building Code and Product Review Committee to be used in Miami-Dade County, Florida under the conditions set forth above.

Francisco J. Quintana, R.A.
Director
Miami-Dade County
Building Code Compliance Office

APPROVED: 08/30/2001

Parex, Incorporated.

ACCEPTANCE NO: 01-0803.15

APPROVED: AUG 3 0 2001

EXPIRES: 08/20/2006

NOTICE OF ACCEPTANCE: SPECIFIC CONDITIONS

1. SCOPE

1.1 This revises and renews the Notice of Acceptance No. 99-1008.02, which was issued on 08/20/98. It approves an Exterior Insulation and Finish System as described in Section 2 of this Notice of Acceptance designed to comply with the South Florida Building Code 1994 Edition for Miami-Dade County (SFBC), for the location where the pressure requirements, as determined by the SFBC Chapter 23 do not exceed the design pressure rating values indicated in the approved drawing.

2. PRODUCT DESCRIPTION

2.1 The Parex Standard Exterior Insulation Finish System over Plywood Frame and its components shall be constructed in strict compliance with the following documents: Drawing No. MD990102 titled "Wall Substrate No, 1 Plywood Wood Frame Impact Resistant Substrate" prepared by Parex Inc. dated June 00, with last revision in October 00, sheets 1 through 5 of 5 bearing the Miami-Dade County Product Control Approval stamp with the Notice of Acceptance number and approval date by the Miami-Dade County Product Control Division. These documents shall hereinafter be referred to as the Approved Drawing.

3. LIMITATIONS

3.1 This system is not to be used on horizontal surfaces exposed to weather; it is intended to be used on wall systems only.

4. INSTALLATION

4.1 The Parex EIFS and its components shall be installed in strict compliance with the approved drawing.

4.2 The installation of this product **will not require** Hurricane Protection System.

5. LABELING

5.1 Each component shall bear a permanent label with the manufacturer's logo, city, state and the following statement "Miami-Dade County Product Control Approved".

6. BUILDING PERMIT REQUIREMENTS

6.1 Application for Building Permit shall be accompanied by copies of the following:

- **6.1.1** Notice of Acceptance.
- **6.1.2** Duplicate copies of the approved drawings, as identified in Section 2 of this Notice of Acceptance.
- **6.1.3** Any other document required by the Building Official or the SFBC in order to properly evaluate the installation of this system.

Candido Font PE, Senior Product Control Examiner
Product Control Division

Parex, Incorporated.

ACCEPTANCE NO: 01-0803.15

APPROVED: AUG 3 0 2001

EXPIRES: 08/20/2006

NOTICE OF ACCEPTANCE STANDARD CONDITIONS

1. Renewal of this Acceptance (approval) shall be considered after a renewal application has been filed and the original submitted documentation, including test-supporting data, engineering documents, are no older than eight (8) years.

2. Any and all approved products shall be permanently labeled with the manufacturer's name, city, state, and the following statement: "Miami-Dade County Product Control Approved", or as specifically stated in the specific conditions of this Acceptance.

3. Renewals of Acceptance will not be considered if:
   a) There has been a change in the South Florida Building Code affecting the evaluation of this product and the product is not in compliance with the code changes;
   b) The product is no longer the same product (identical) as the one originally approved;
   c) If the Acceptance holder has not complied with all the requirements of this acceptance, including the correct installation of the product;
   d) The engineer who originally prepared, signed and sealed the required documentation initially submitted is no longer practicing the engineering profession.

4. Any revision or change in the materials, use, and/or manufacture of the product or process shall automatically be cause for termination of this Acceptance, unless prior written approval has been requested (through the filing of a revision application with appropriate fee) and granted by this office.

5. Any of the following shall also be grounds for removal of this Acceptance:
   a) Unsatisfactory performance of this product or process.
   b) Misuse of this Acceptance as an endorsement of any product, for sales, advertising or any other purpose.

6. The Notice of Acceptance number preceded by the words Miami-Dade County, Florida, and followed by the expiration date may be displayed in advertising literature. If any portion of the Notice of Acceptance is displayed, then it shall be done in its entirety.
7. A copy of this Acceptance as well as approved drawings and other documents, where it applies, shall be provided to the user by the manufacturer or its distributors and shall be available for inspection at the job site at all time. The engineer need not reseal the copies.

8. Failure to comply with any section of this Acceptance shall be cause for termination and removal of Acceptance.

9. This Notice of Acceptance consists of pages 1, 2 and this last page 3.

Candido Font PE, Senior Product Control Examiner
Product Control Division

END OF THIS ACCEPTANCE

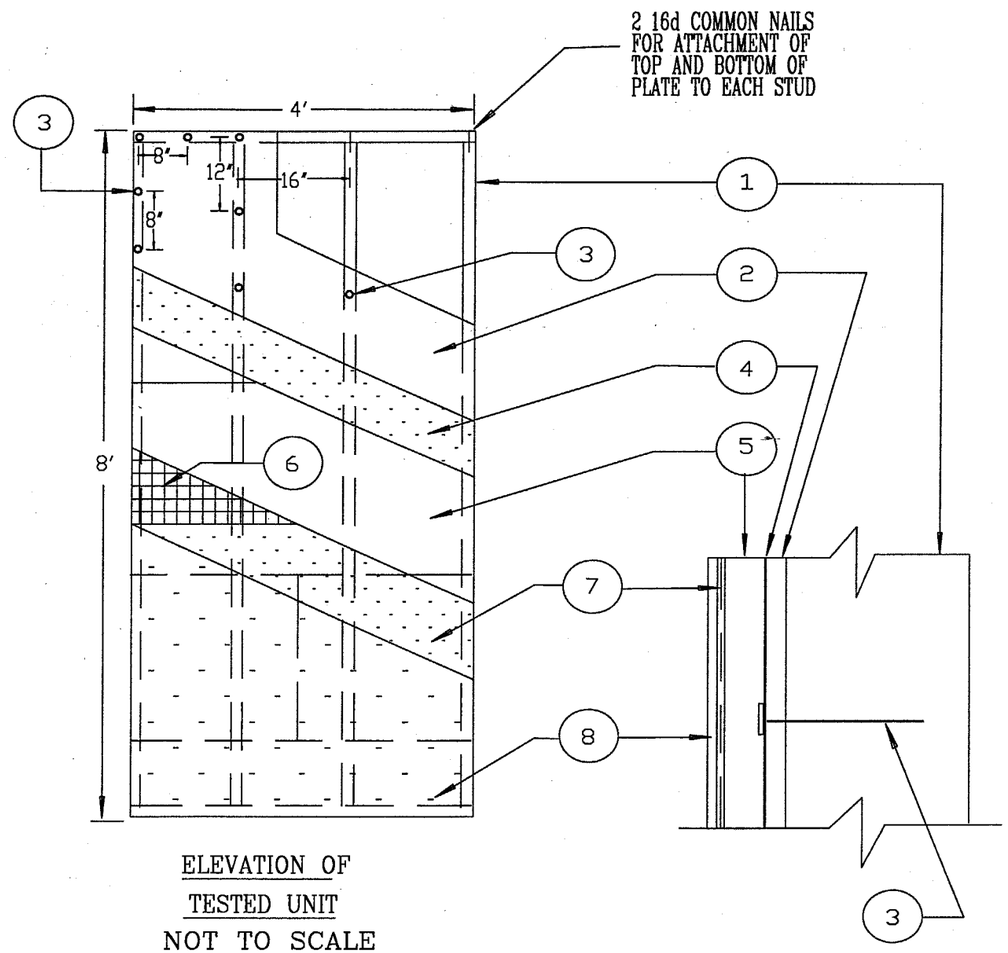

ELEVATION OF TESTED UNIT

NOT TO SCALE

ALLOWABLE DESIGN PRESSURE	
POSITIVE (PSF)	NEGATIVE (PSF)
66	58
INSTALLED OVER AN IMPACT RESISTANT SUBSTRATE	

MATERIAL LIST

SUBSTRATE

1. NOMINAL 2" X 4" S.Y.P. WOOD STUDS OR MIN. 3 5/8 X 18 GA STEEL STUDS, 1-5/8" MINIMUM FLANGE AND 33 KPSI YIELD STRENGTH AT 16" O.C.

2. SHEATHING: 5/8" THICK 5-PLY CDX PLYWOOD

3. 10d COMMON NAILS X 3" INTO WOOD STUDS OR #6 X 1 1/4" BUGLEHEAD SCREWS INTO METAL STUDS SPACED 8" O.C. PERIMETER AND 12" O.C. FIELD OF SHEATHING.

EIF SYSTEM

4. PAREX SYNTHETIC ADHESIVE 303. IT IS READY MIXED WITH A DENSITY OF 1.4 GMS PER CUBIC CENTIMETER. APPLY WITH 5/16" X 5/16" NOTCHED TROWEL PARALLEL TO LONG DIMENSION OF THE INSULATION BOARD.

5. APACHE EPS INSULATION BOARD 1 INCH THICK AND DENSITY OF 1 POUND PER CUBIC FOOT. AFTER COATING WITH ADHESIVE, APPLY WITH PRESSURE TO 5/8" PLYWOOD SHEATHING HORIZONTALLY WITH STAGGERED JOINTS.

6. PAREX LONG DETAIL MESH 355 OPEN WEAVE FIBERGLASS REINFORCING FABRIC, 4.5 OUNCES PER SQUARE YARD, EMBEDDED IN PAREX BASE COAT ADHESIVE 121. MESH IS LAPPED BY 2-1/2"

7. PAREX BASE COAT/ADHESIVE 121, ACRYLIC POLYMER, MIXED 1 TO 1 BY WEIGHT WITH PORTLAND CEMENT AND ONE GALLON OF WATER. APPLY A LAYER 1/16" THICK TO EXPOSED SURFACE OF THE INSULATION BOARD USING A S.S. TROWEL. THE MESH IS EMBEDDED IN THE WET BASE COAT BY TROWELING FROM THE CENTER TO THE EDGES.

8. PAREX SERIES 500 ACRYLIC BASED TEXTURED FINISH. IT IS READY MIXED WITH A DENSITY OF 1.85 GRAMS PER CUBIC CENTIMETER. APPLY AT A NOMINAL THICKNESS OF 1/16" AFTER THE BASE COAT IS DRIED.

GENERAL NOTES:

1. THIS SYSTEM HAS BEEN DESIGNED IN ACCORDANCE WITH THE SOUTH FLORIDA BUILDING CODE 1994 EDITION AND ITS LATEST SUPPLEMENTS.
2. THIS SYTEM HAS BEEN TESTED IN ACCORDANCE WITH DADE COUNTY PROTOCOLS PA-202 AND PA-203 FOR STRUCTURAL AND CYCLIC TESTING.
3. THIS SYTEM SHALL BE APPLIED BY A LICENSED PLASTERING CONTRACTOR, FOLLOWING THIS NOTICE OF ACCEPTANCE, THE RECOMMENDATIONS OF PAREX, INC., AND THE APPLICABLE SECTIONS OF THE SOUTH FLORIDA BUILDING CODE.
4. THE ENGINEER AND/OR ARCHITECT OF RECORD FOR EACH PROJECT USING THIS SYSTEM SHALL SIZE ALL STUD FRAMING TO ENSURE CONFORMANCE WITH STUD DEFLECTION AND STRESS LIMITATIONS AS REQUIRED BY ALL GOVERNING CODES AND THIS DOCUMENT.
5. INSULATION BOARDS SHALL BE POSITIONED IN A RUNNING BOND PATTERN.
6. ALL STEEL STUDS SHALL BE STRUCTURAL WITH 1-5/8" MIN. FLANGE WIDTH AND HAVE A MINIMUM YIELD STRENGTH OF 33,000 PSI.
7. DETAILS ON SHEET 2 TO 5 OF 5 ARE TYPICAL AND SHOW INTENT TO PREVENT WATER INFILTRATION INTO AND BEHIND THE SYSTEM. ALTERNATE DETAILS AND SPECIFIC CONDITIONS NOT COVERED BY THE TYPICAL DETAILS ARE THE RESPONSIBILITY OF THE LICENSED DESIGN PROFESSIONAL IN CONSULTATION WITH PAREX, INC.
8. ALL STUDS WITH THIS SYSTEM SHALL BE COMPLETELY SHEATHED AT THE INTERIOR FLANGE OR BRIDGED AT A MAXIMUM EVERY 5' OF STUD LENGTH OR AS SPECIFIED BY THE STUD MANUFACTURER.

COMPLIES WITH THE SOUTH FLORIDA BUILDING CODE
DATE AUG 30 2001
BY
PRODUCT CONTROL DIVISION
BUILDING CODE COMPLIANCE OFFICE
ACCEPTANCE NO. 01-0803.15

Dade County Approval

JUL 23 2001

Warren W. Schaefer, P.E.
Structural Engineer
P.E. No. 44135

PAREX, INC.
1870 STONE MOUNTAIN/LITHONIA RD
P.O. Box 189 REDAN, GA 30074
(770)482-7872 FAX:(770)482-6878

PAREX STANDARD EIFS

WALL SUBSTRATE NO. 1
PLYWOOD WOOD FRAME IMPACT RESISTANT SUBSTRATE

DWG NO. MD990102 | SHEET 1/5

DRAWN BY: ROBERT ROWE, PETER HARRISON | DATE: JUNE 00 | SCALE: NONE

REVISED: JULY 00, OCTOBER 00

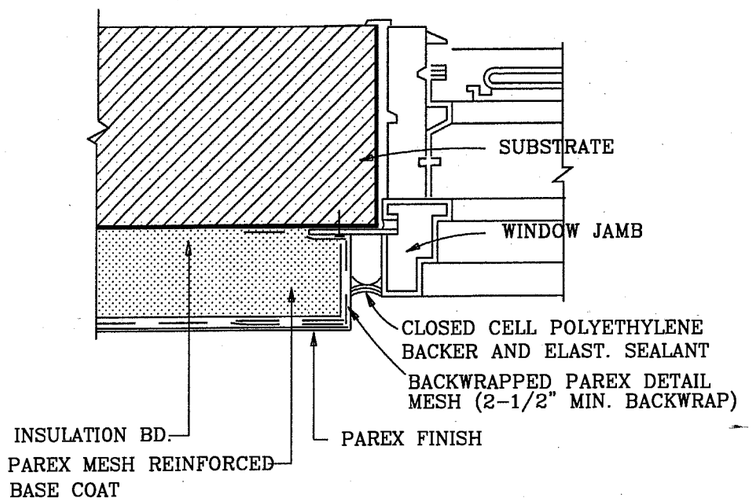

TERMINATION AT RECESSED JAMB

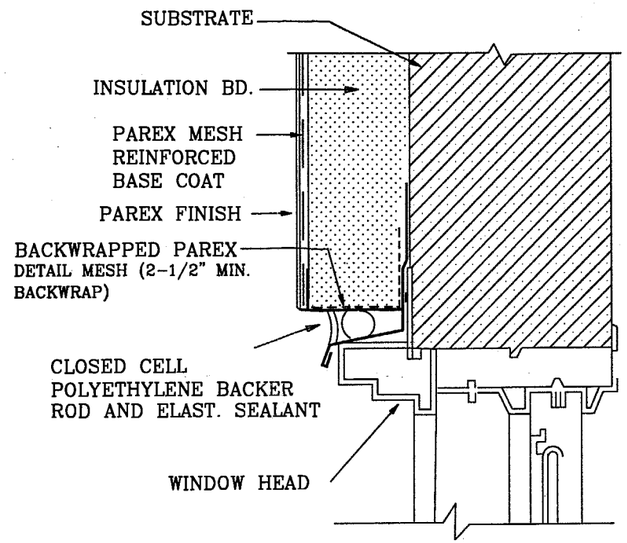

TERMINATION AT RECESSED HEAD

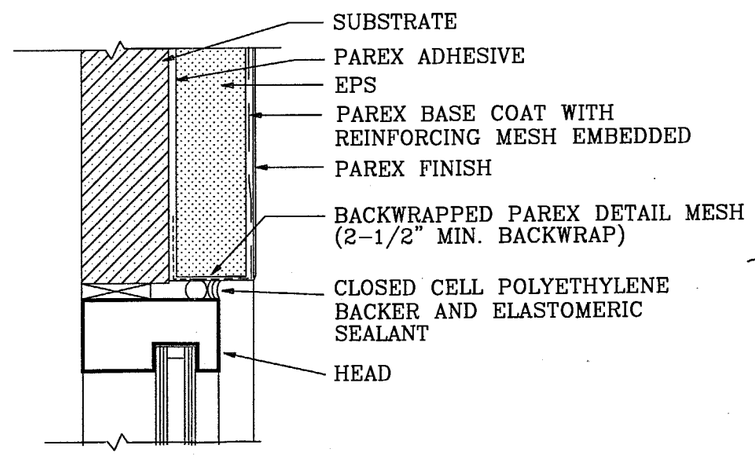

HEAD WITH BACKWRAP

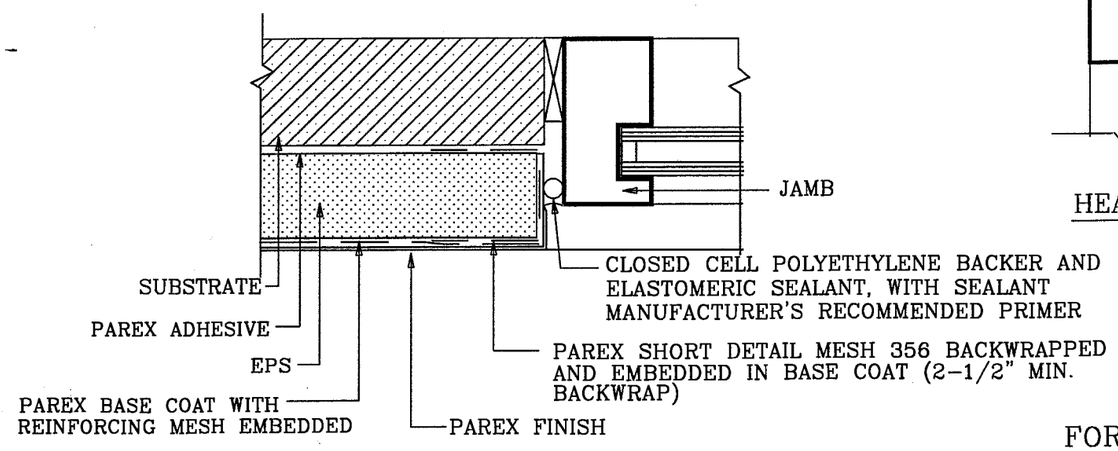

BACKWRAPPED JAMB

FOR DETAILS OF THE SUBSTRATE AND THE EIF SYSTEM SEE SHEET 1 OF 5

GENERAL DETAIL NOTES:

1. PROVIDE FLASHING AND/OR SEALANTAT ALL TERMINATIONS OF THE PAREX EIF SYSTEM SO AS TO PREVENT WATER INTRUSION BETWEEN THE SYSTEM AND ADJACENT CONSTRUCTION.
2. WINDOWS AND DOORS SHALL CONFORM TO THE S.F.B.C.
3. FLASHING MATERIALS SHALL CONFORM TO THE S.F.B.C.
4. PAN FLASHINGS AT SILLS SHALL HAVE UP-TURNED END DAMS WITH WATERTIGHT SEAMS.
5. FLASHING SECTIONS SHALL BE JOINED WITH WATERTIGHT SEAMS.
6. BACKER ROD AND SEALANT JOINTS AT EIF SYSTEM TERMINATIONS SHALL BE CAULKED WITH ELASTOMERIC SEALANT CAPABLE OF 50% EXTENSION AND 50% COMPRESSION OF INSTALLED WIDTH OF NOT LESS THAN 1/2".
7. BACKER ROD AND SEALANT JOINTS AT EXPANSION JOINTS IN THE EIF SYSTEM SHALL BE CAULKED WITH SEALANT CAPABLE OF 100% ELONGATION AND 50% COMPRESSION OF INSTALLED WIDTH OF NOT LESS THAN 3/4".
8. BACKER ROD SHALL BE CLOSED-CELL POLYETHYLENE.
9. APPLY SEALANTS TO DRY EIF SYSTEM BASE COAT.
10. FOLLOW SEALANT MANUFACTURER'S INSTALLATION INSTRUCTIONS.
11. ALL EIF SYSTEM EDGES SHALL BE TERMINATED BY BACK-WRAPPED FIBERGLASS MESH AND BASE COAT OR TO EXTERIOR GRADE RIGID PVC EXTRUSIONS TO PROVIDE A SUBSTRATE FOR SEALANT.
12. BASE COAT APPLICATION ON EIF SYSTEM EDGES SHALL COMPLETELY EMBED THE FIBERGLASS MESH AND PROVIDE A SMOOTH UNIFORM SURFACE FOR THE APPLICATION OF SEALANT.

APPROVED AS COMPLYING WITH THE SOUTH FLORIDA BUILDING CODE
DATE AUG 30 2001
BY
PRODUCT CONTROL DIVISION
BUILDING CODE COMPLIANCE OFFICE
ACCEPTANCE NO. 01-0803.15

Dade County Approval

JUL 23 2001

Warren W. Schaefer, P.E.
Structural Engineer
P.E. No. 44135

PAREX, INC.
1870 STONE MOUNTAIN/LITHONIA RD
P.O. Box 189 REDAN, GA 30074
(770)482-7872 FAX:(770)482-6878

PAREX STANDARD EIFS

WALL SUBSTRATE NO. 1
PLYWOOD WOOD FRAME IMPACT RESISTANT SUBSTRATE

DWG NO. MD990102 | SHEET 2/5

DRAWN BY: ROBERT ROWE, PETER HARRISON | DATE: JUNE 00 | SCALE: NONE

REVISED: JULY 00

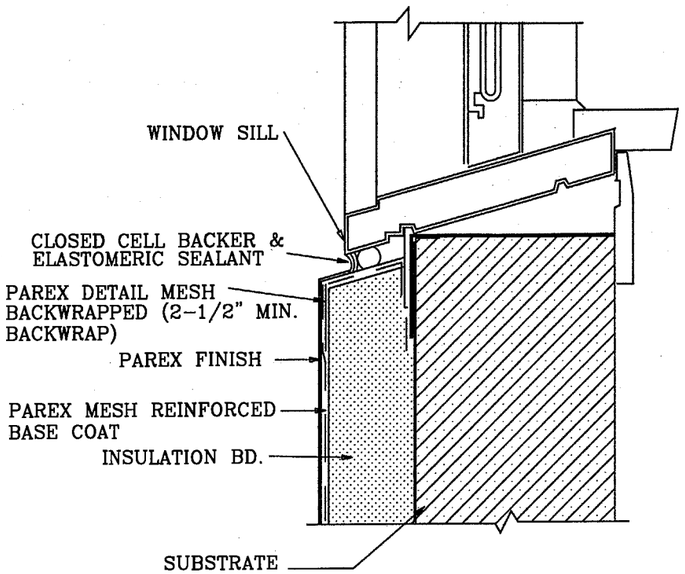

TERMINATION AT RECESSED SILL

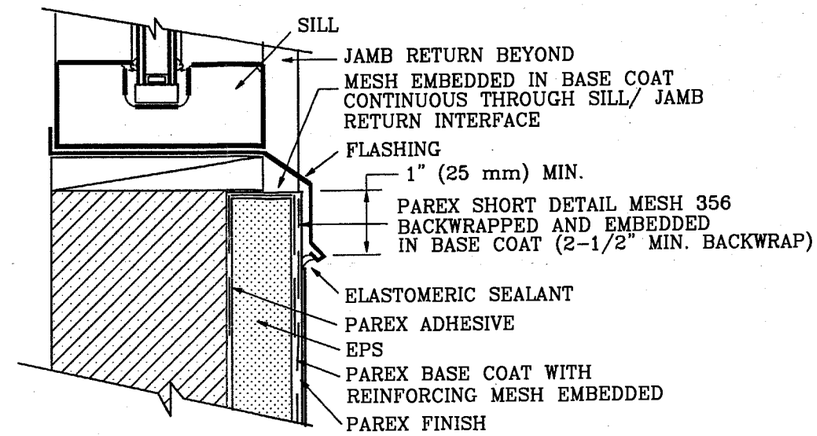

BACKWRAPPED TERMINATION AT SILL

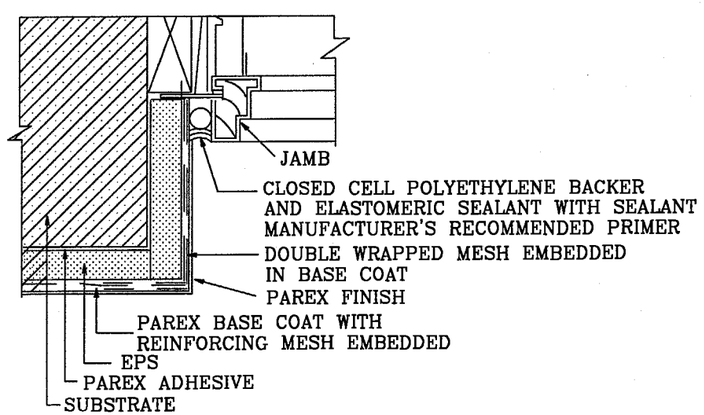

INSULATED JAMB RETURN

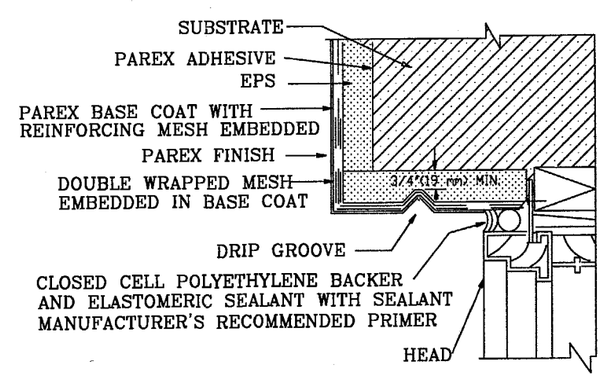

INSULATED HEAD RETURN

FOR DETAILS OF THE SUBSTRATE AND THE EIF SYSTEM SEE SHEET 1 OF 5

GENERAL DETAIL NOTES:

13. COUNTER-FLASHING INSTALLED OVER UPPER HORIZONTAL TERMINATIONS OF THE EIF SYSTEM SHALL LAP THE SYSTEM SUFFICIENTLY TO PREVENT UPWARD ENTRY OF WIND-DRIVEN RAIN OR SHALL BE SEALED AT ITS LOWER EDGE.
14. PRIMER APPLIED TO THE BASE COAT SHALL BE DRY AT THE TIME THE SEALANT IS APPLIED.
15. MINIMUM LENGTH OF BACKWRAP MESH ATTACHMENT TO THE SUBSTRATE IS 2-1/2" (38 mm).

APPROVED AS COMPLYING WITH THE SOUTH FLORIDA BUILDING CODE
DATE AUG 30 2001
BY
PRODUCT CONTROL DIVISION
BUILDING CODE COMPLIANCE OFFICE
ACCEPTANCE NO. 01-0803.15

Dade County Approval

JUL 23 2001

Warren W. Schaefer, P.E.
Structural Engineer
P.E. No. 44135

PAREX, INC.
1870 STONE MOUNTAIN/LITHONIA RD
P.O. Box 189 REDAN, GA 30074
(770)482-7872 FAX:(770)482-6878

PAREX STANDARD EIFS

WALL SUBSTRATE NO. 1
PLYWOOD WOOD FRAME IMPACT RESISTANT SUBSTRATE

DWG NO. MD990102 | SHEET 3/5

DRAWN BY: ROBERT ROWE, PETER HARRISON | DATE: JUNE 00 | SCALE: NONE

REVISED: JULY 00

FOR GENERAL DETAIL NOTES, REFER TO SHEETS 2 & 3 OF 5

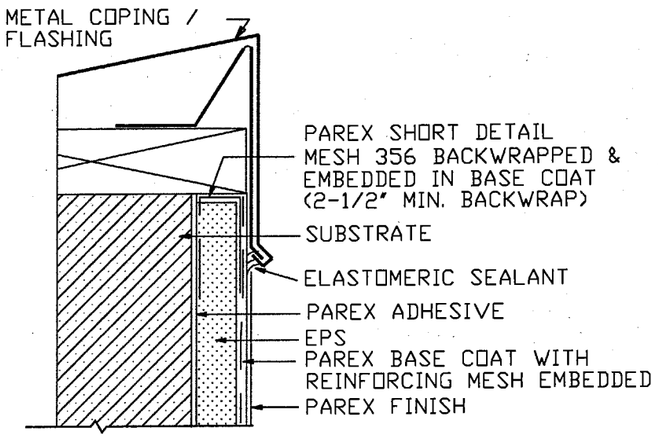

PARAPET

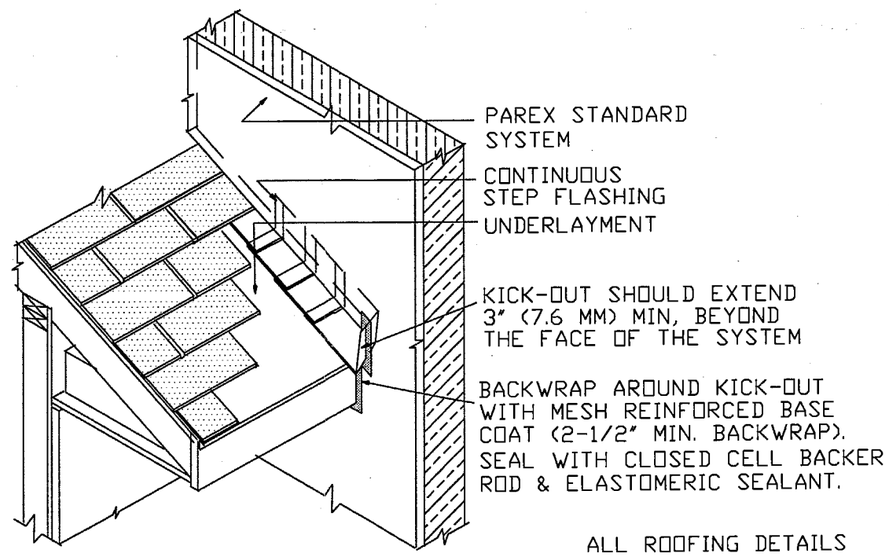

INTERSECTION OF ROOF AT WALL

ALL ROOFING DETAILS MUST COMPLY WITH CHAPTER 34 OF THE S.F.B.C.

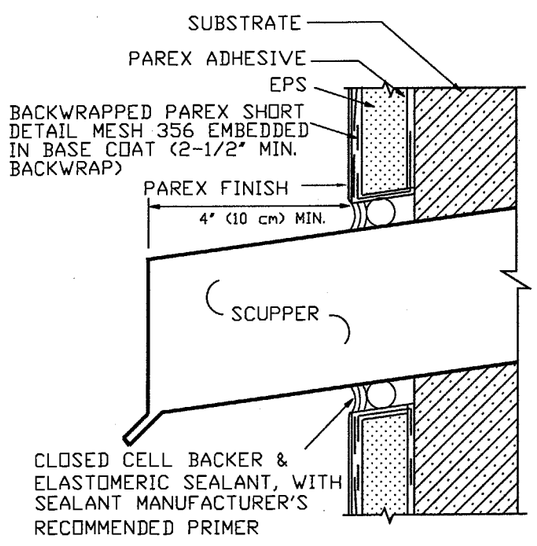

SCUPPER

FOR DETAILS OF THE SUBSTRTATE AND THE EIF SYSTEM SEE SHEET 1 OF 5

APPROVED AS COMPLYING WITH THE SOUTH FLORIDA BUILDING CODE
DATE AUG 3 0 2001
BY
PRODUCT CONTROL DIVISION
BUILDING CODE COMPLIANCE OFFICE
ACCEPTANCE NO. 01-0803.15

Dade County Approval

JUL 2 3 2001

Warren W. Schaefer, P.E.
Structural Engineer
P.E. No. 44135

PAREX, INC.
1870 STONE MOUNTAIN/LITHONIA RD
P.O. Box 189 REDAN, GA 30074
(770)482-7872 FAX:(770)482-6878

PAREX STANDARD EIFS

WALL SUBSTRATE NO. 1
PLYWOOD WOOD FRAME IMPACT RESISTANT SUBSTRATE

DWG NO. MD990102 | SHEET 4/5

DRAWN BY: ROBERT ROWE, PETER HARRISON | DATE: JUNE 00 | SCALE: NONE

REVISED: JULY 00

FOR GENERAL DETAIL NOTES, REFER TO SHEETS 2 & 3 OF 5

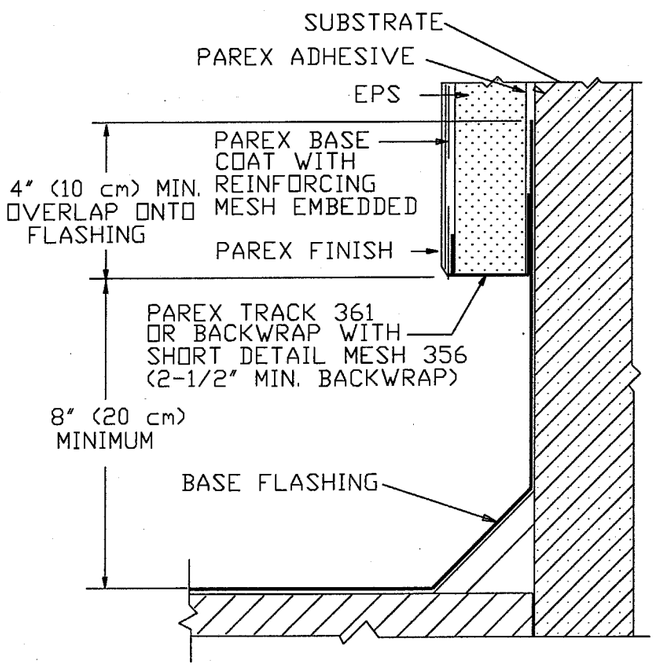

HIGH WALL AT LOW ROOF

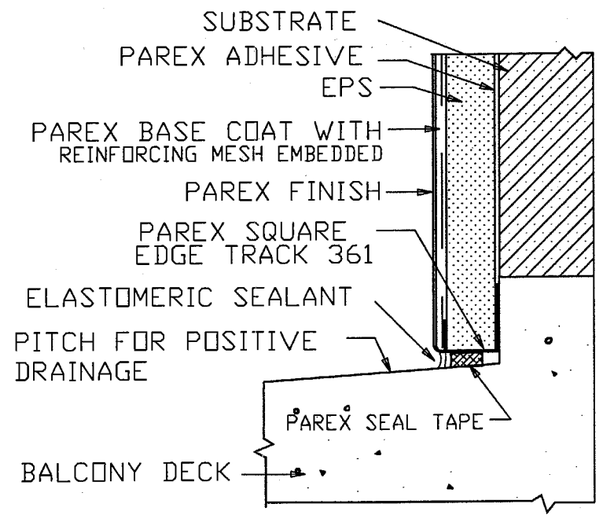

TERMINATION AT BALCONY DECK

FOR DETAILS OF THE SUBSTRTATE AND THE EIF SYSTEM SEE SHEET 1 OF 5

APPROVED AS COMPLYING WITH THE SOUTH FLORIDA BUILDING CODE
DATE AUG 3 0 2001
BY
PRODUCT CONTROL DIVISION
BUILDING CODE COMPLIANCE OFFICE
ACCEPTANCE NO. 01-0803.15

Dade County Approval

JUL 2 3 2001

Warren W. Schaefer, P.E.
Structural Engineer
P.E. No. 44135

PAREX, INC.
1870 STONE MOUNTAIN/LITHONIA RD
P.O. Box 189 REDAN, GA 30074
(770)482-7872 FAX:(770)482-6878

PAREX STANDARD EIFS

WALL SUBSTRATE NO. 1
PLYWOOD WOOD FRAME IMPACT RESISTANT SUBSTRATE

DWG NO. MD990102 | SHEET 5/5

DRAWN BY: ROBERT ROWE, PETER HARRISON | DATE: JUNE 00 | SCALE: NONE

REVISED: JULY 00